US00D964983S

(12) United States Design Patent

Lin

(10) Patent No.: US D964,983 S
(45) Date of Patent: ** Sep. 27, 2022

(54) **NOTEBOOK COMPUTER SHELL**

(71) Applicant: **Guangzhou Roiskin Electrical Technology Co., Ltd.**, Guangzhou (CN)

(72) Inventor: **Sam Lin**, Guangzhou (CN)

(73) Assignee: **Guangzhou Roiskin Electrical Technology Co., Ltd.**, Guangzhou (CN)

(**) Term: **15 Years**

(21) Appl. No.: **29/656,172**

(22) Filed: **Jul. 11, 2018**

(30) **Foreign Application Priority Data**

May 8, 2018 (CN) 201830205895.1

(51) **LOC (13) Cl.** **14-02**

(52) **U.S. Cl.**
USPC **D14/315**

(58) **Field of Classification Search**
USPC D14/203.4, 203.6, 247, 345–346, D14/315–327, 391–399, 434, 455–457,
(Continued)

(56) **References Cited**

U.S. PATENT DOCUMENTS

D438,379 S * 3/2001 Wang D3/304
D515,811 S * 2/2006 Liu D3/295
(Continued)

FOREIGN PATENT DOCUMENTS

CN 302917044 * 8/2014
CN 304635069 * 5/2018

OTHER PUBLICATIONS

Multi-function laptop protective case, Roiskin, roiskin.com, author not listed, published Jan. 27, 2018 per wayback machine © 2011-2017 Guangzhou Roiskin Electrical Technology Co. Ltd., online, site visited Mar. 23, 2020. Available from Internet, URL: https://www.aidata.com/page/353 (Year: 2018).*
(Continued)

Primary Examiner — Holly E Thurman
Assistant Examiner — Altaira J Swangin
(74) *Attorney, Agent, or Firm* — Hoffmann & Baron, LLP

(57) **CLAIM**

The ornamental design for a notebook computer shell, as shown and described.

DESCRIPTION

FIG. **1** is a perspective view of a notebook computer shell showing my new design;
FIG. **2** is a front view thereof;
FIG. **3** is a back view thereof;
FIG. **4** is a left side view thereof;
FIG. **5** is a right side view thereof;
FIG. **6** is a top view thereof;
FIG. **7** is a bottom view thereof; and
FIG **8** is an enlarged detail view showing a portion of the design as indicated in the area '**8**' in FIG. **7**;
FIG **9** is an enlarged detail view showing a portion of the design as indicated in the area '**9**' in FIG. **7**; and,
FIG. **10** is a back perspective view of the notebook computer shell of FIGS. **1-7**, shown in an alternate configuration with its handle open.
The broken lines shown in the drawings are for the purpose of illustrating portions of the notebook computer shell that form no part of the claimed design. The additional set of broken lines showing enlarged detail views in FIGS. **7-9** are for annotative purposes and form no part thereof.

1 Claim, 10 Drawing Sheets

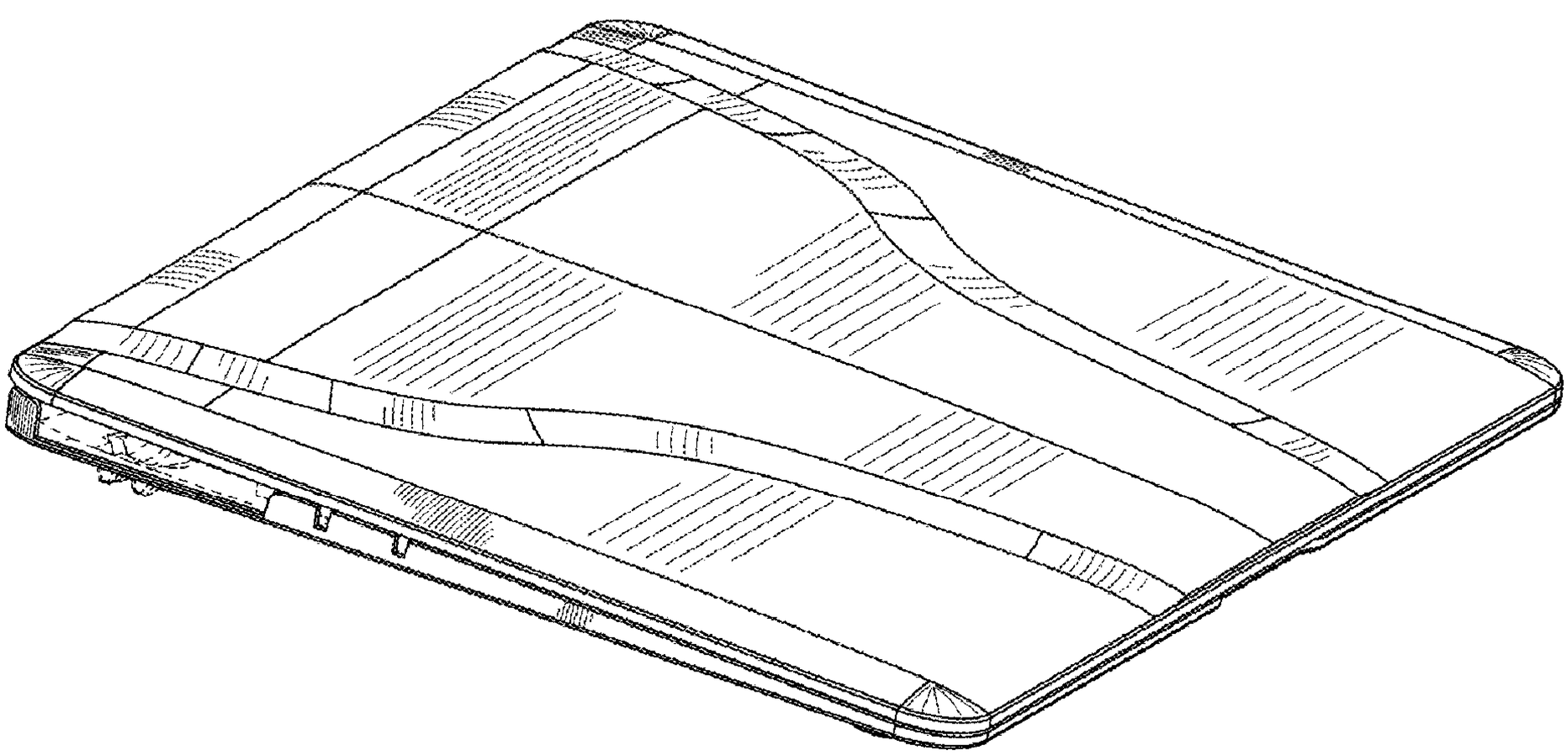

(58) **Field of Classification Search**
USPC ..... D14/477, 507, 509, 150, 168, 331, 390, D14/401, 429, 440; D18/1–2, 4.1–4.6, 7, D18/11; 235/145 A, 145 R; 341/22–23; 345/104, 156, 168–169, 173; 361/679.08, 361/679.09, 679.11, 679.26, 679.27; 708/142, 146; D21/324, 409, 512, 515; D11/132; D24/186; 400/489–490; D3/282
CPC B41J 5/00; B41J 5/10; B41J 5/12; F16M 11/10; G06F 3/0219; G06F 3/02
See application file for complete search history.

(56) **References Cited**

U.S. PATENT DOCUMENTS

7,886,903 B1 * 2/2011 Wurzelbacher, Jr. G06F 1/1616 206/320
D719,169 S * 12/2014 McBroom D14/440
D725,116 S * 3/2015 Li D14/440
D802,596 S * 11/2017 Hannon D14/440
D812,618 S * 3/2018 Altaras D14/440
D812,619 S * 3/2018 Altaras D14/440
D843,377 S * 3/2019 Tang D14/440
D851,648 S * 6/2019 Tan D14/440
D854,023 S * 7/2019 Yang D14/440
D868,789 S * 12/2019 Weng D14/440
D868,790 S * 12/2019 Weng D14/440
D873,011 S * 1/2020 Kao D3/282
D874,465 S * 2/2020 Poon D14/440
D879,104 S * 3/2020 Li D14/440
D879,105 S * 3/2020 Li D14/440
10,585,450 B1 * 3/2020 Giazzon G06F 1/1616
D881,894 S * 4/2020 Zhang D14/440
D881,895 S * 4/2020 Liu D14/440
D882,261 S * 4/2020 Li D3/284
D883,988 S * 5/2020 Li D14/440
D883,989 S * 5/2020 Cheng D14/440
D888,719 S * 6/2020 Moore D14/440
D901,512 S * 11/2020 Chen D14/440
D902,935 S * 11/2020 Li D14/440
D920,982 S * 6/2021 Xu D14/440
D920,983 S * 6/2021 Chan D14/440
D924,876 S * 7/2021 Chan D14/440
2008/0029412 A1 * 2/2008 Ho F16M 11/2014 206/320
2008/0308437 A1 * 12/2008 Lin G06F 1/1616 206/320
2013/0214661 A1 * 8/2013 McBroom G06F 1/1667 312/325
2018/0126544 A1 * 5/2018 Chen B25H 3/02

OTHER PUBLICATIONS

Laptop case, Roiskin, roiskin.com, author not listed, published Aug. 23, 2018 per wayback machine © 2011-2017 Guangzhou Roiskin Electrical Technology Co. Ltd., online, site visited Mar. 23, 2020. Available from Internet, URL: https://www.roiskin.com/p-c44799b04a1c72e3c8593a53e8000c78.html (Year: 2018).*
Laptop Case, Urban Armor Gear, amazon.com, published by Urban Armor Gear, first available Jun. 28, 2017 © 1996-2022 Amazon.com, Inc., online, site visited May 10, 2022. Available from Internet, URL: https://www.amazon.com/URBAN-ARMOR-GEAR-Microsoft-Feather-Light/dp/B072N43R59/ref=sr_1_100?...crid=L291IKDNS22I&keywords=rugged+laptop+case&qid=1652204582&s=electronics&sprefix=rugged+laptop+case%2Celectronics%2C54&sr=1-100 (Year: 2017).*

* cited by examiner

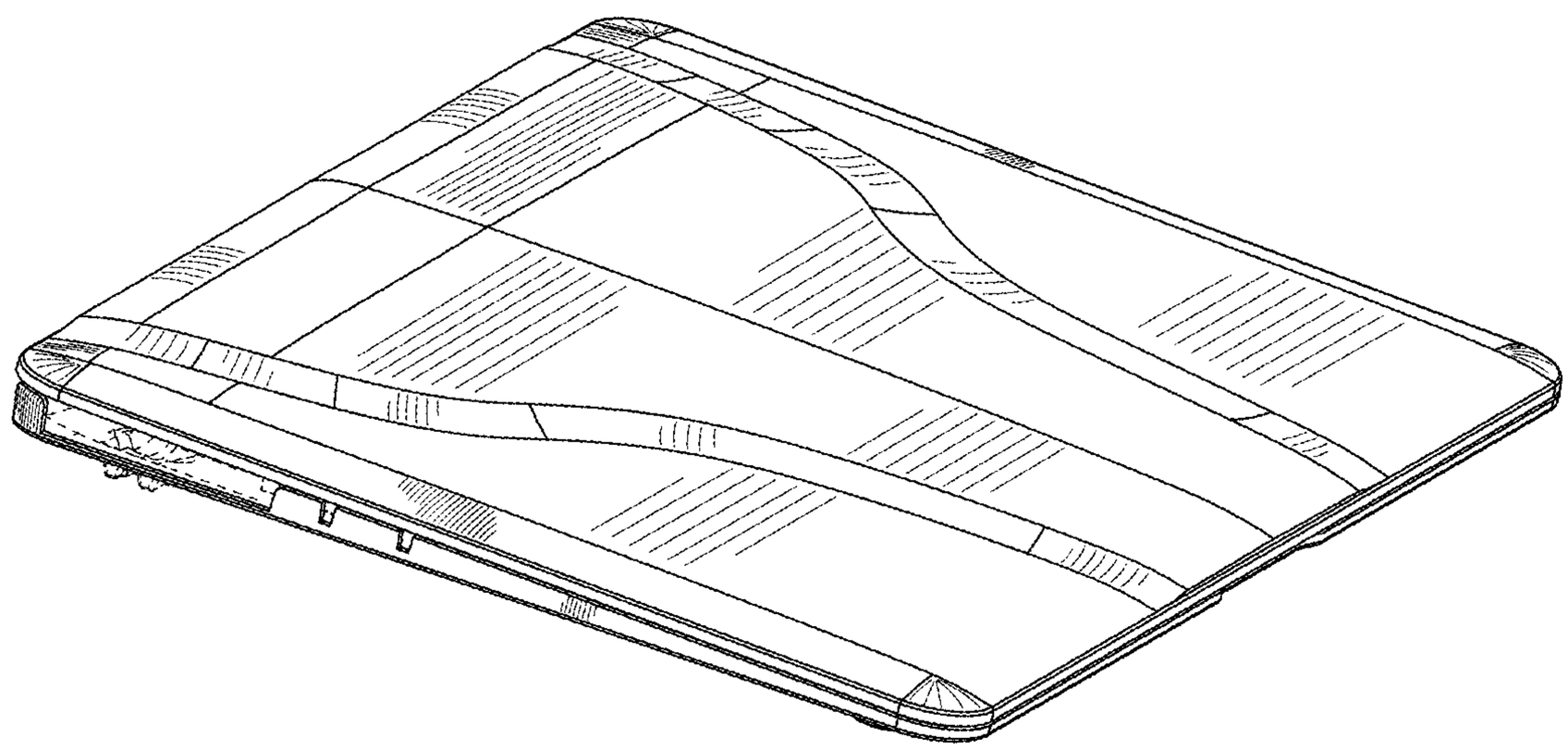

FIG.1

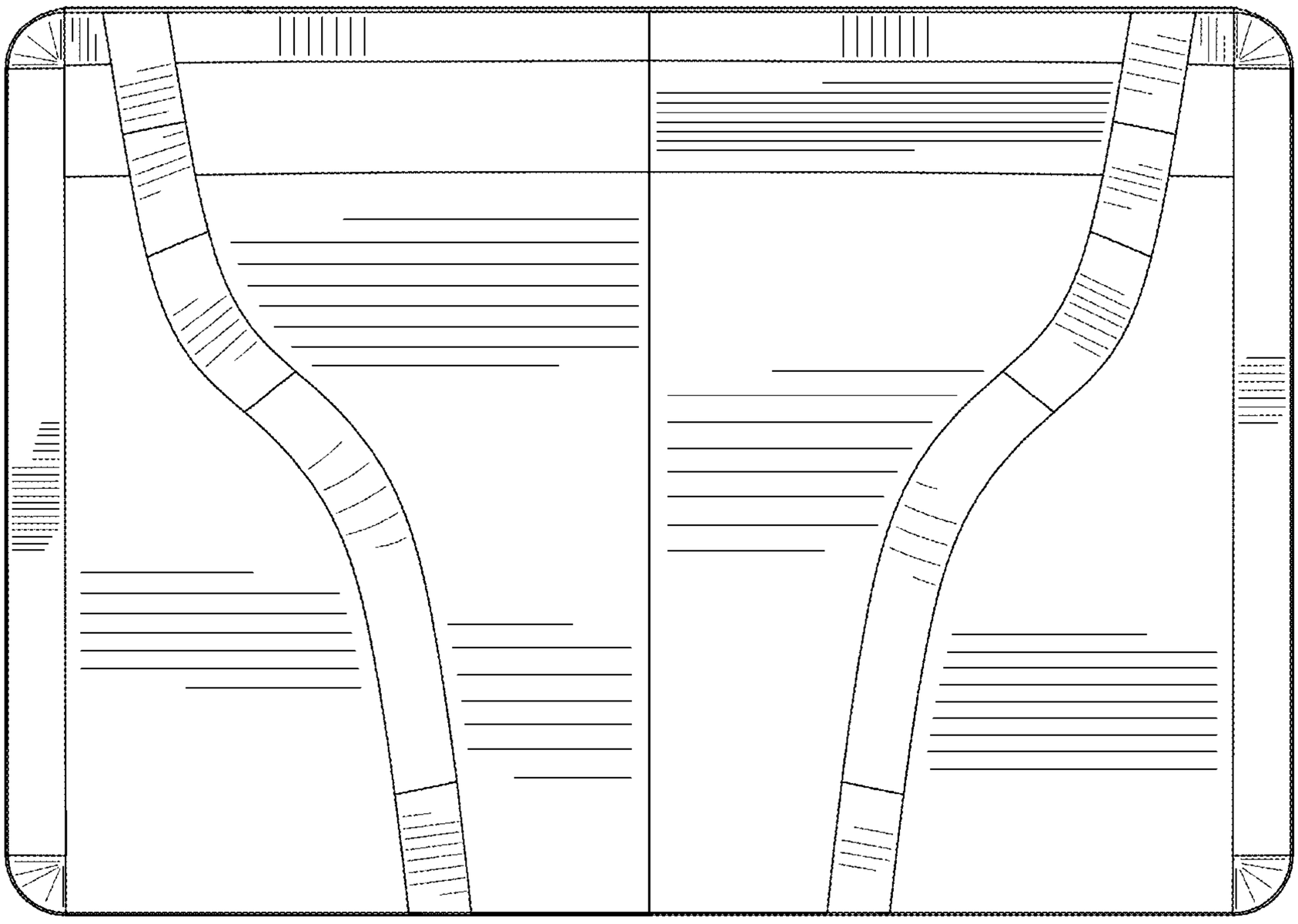

FIG.2

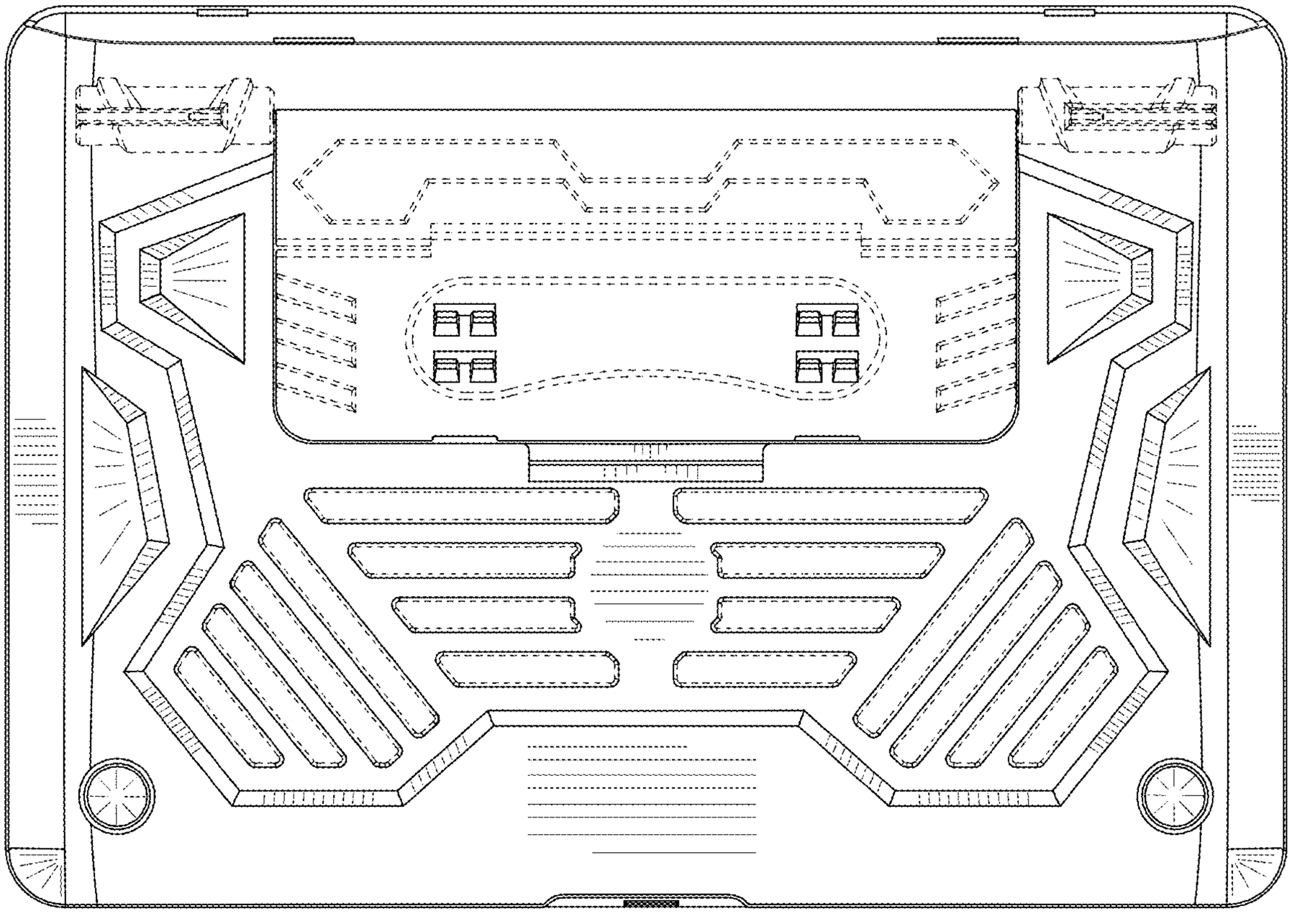

FIG.3

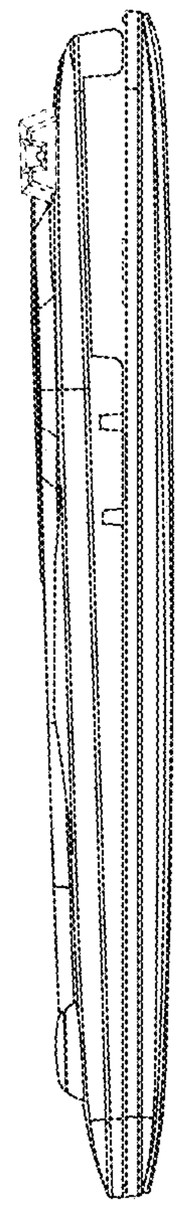

FIG.4

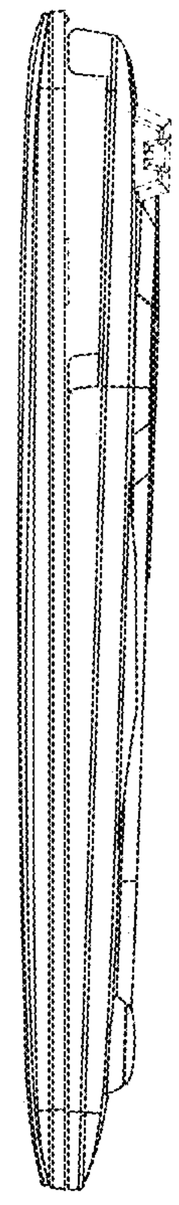

FIG.5

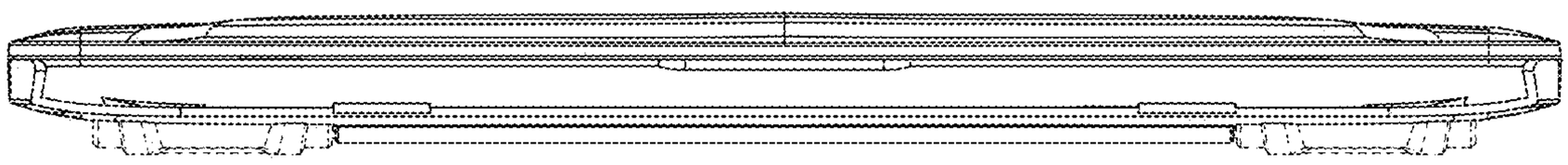

FIG.6

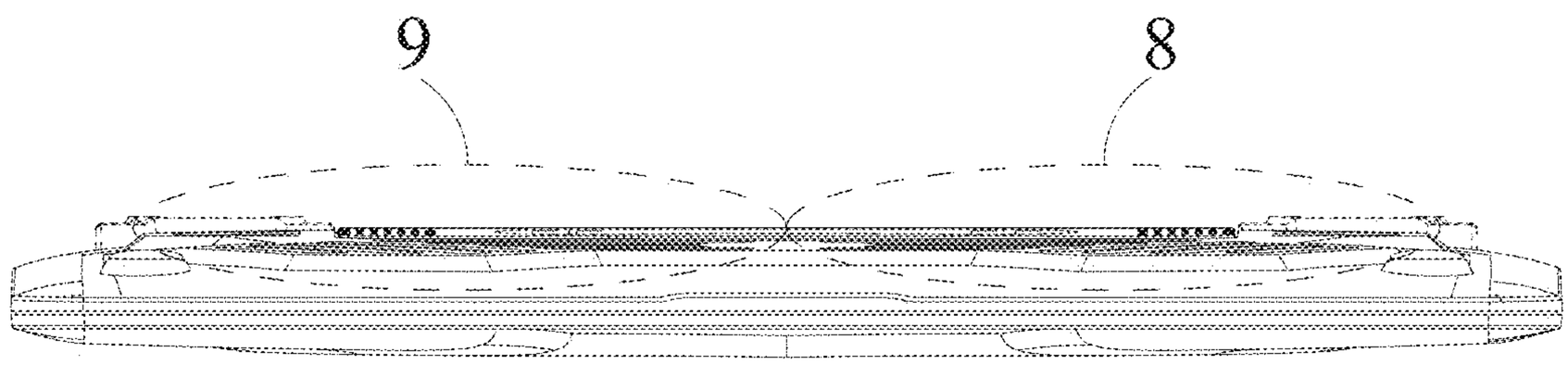

FIG.7

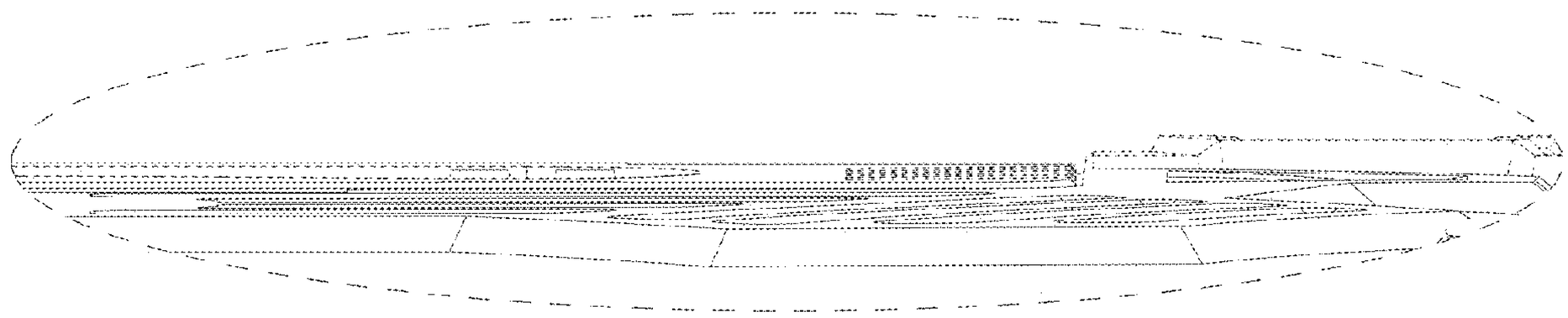

FIG.8

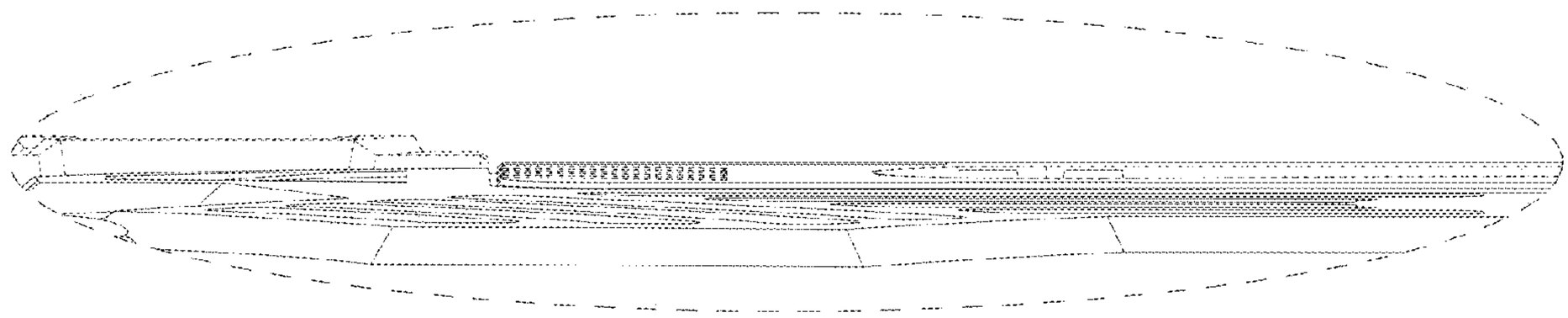

FIG.9

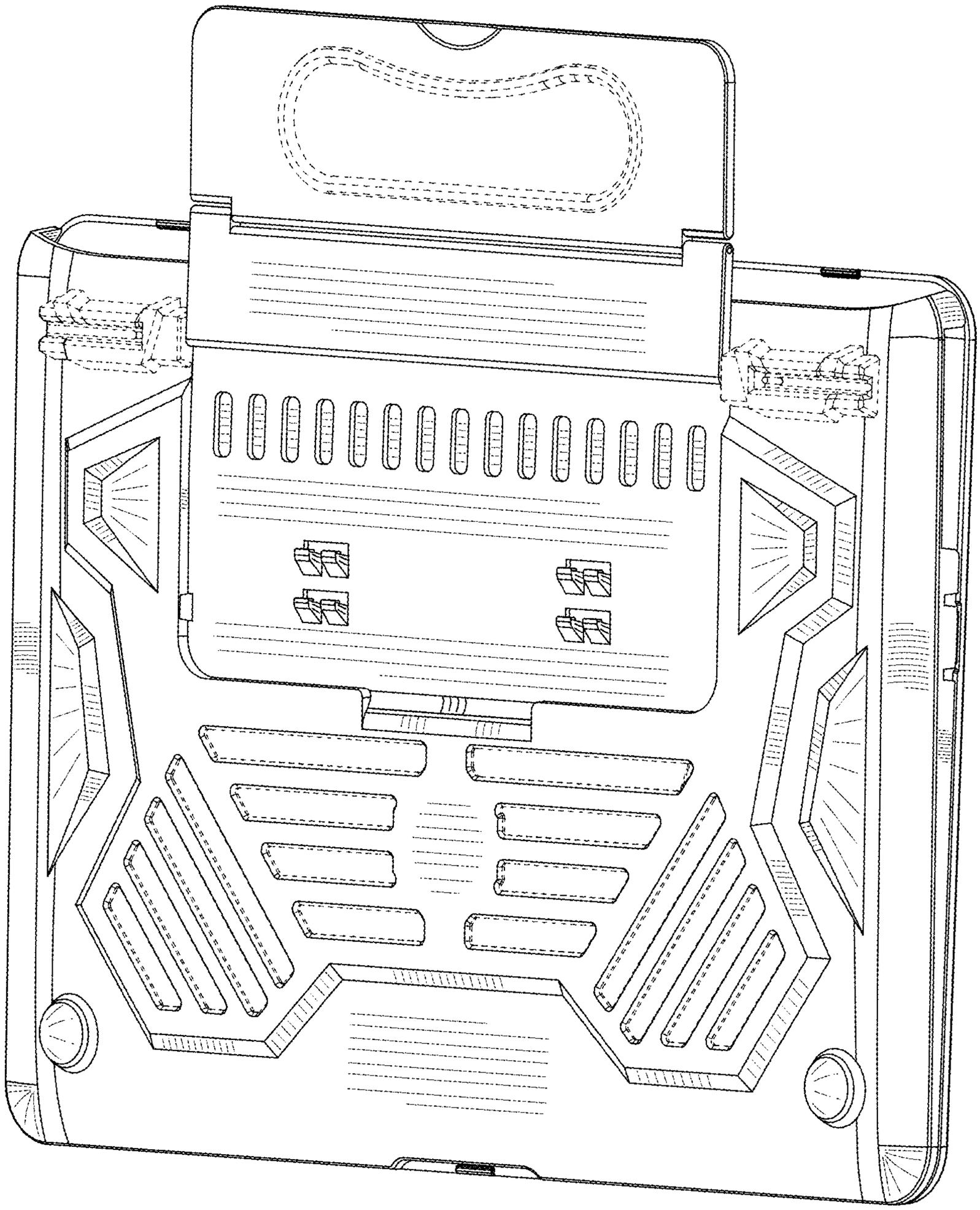

FIG.10