US00D964882S

(12) United States Design Patent
Milot

(10) Patent No.: US D964,882 S
(45) Date of Patent: ** Sep. 27, 2022

(54) **WRISTBAND ATTACHMENT DEVICE**

(71) Applicant: **Taylor Milot**, Windermere, FL (US)

(72) Inventor: **Taylor Milot**, Windermere, FL (US)

(**) Term: **15 Years**

(21) Appl. No.: **29/812,478**

(22) Filed: **Oct. 21, 2021**

(51) **LOC (13) Cl.** **11-01**

(52) **U.S. Cl.**
USPC **D11/86**

(58) **Field of Classification Search**
USPC D11/1–25, 86
CPC A44C 5/00; A44C 5/0007; A44C 5/14; G02C 11/02
See application file for complete search history.

(56) **References Cited**

U.S. PATENT DOCUMENTS

5,022,237	A	6/1991	Monderer et al.	
5,654,787	A *	8/1997	Barison	G02C 11/02 351/52
D404,677	S *	1/1999	Johnson	D11/5
D425,544	S *	5/2000	Erpillo	D11/40
6,807,680	B2	10/2004	Sloot	
D535,055	S *	1/2007	Been	D2/606
7,591,554	B2 *	9/2009	Guerrero	G02C 11/02 351/52
D631,780	S *	2/2011	Levy	D11/87
8,621,723	B2 *	1/2014	Meissner	A44C 15/003 63/38
D707,153	S	6/2014	Meissner	
D707,584	S	6/2014	Webb	
D716,172	S	10/2014	Howe	
D741,213	S	10/2015	Moreau et al.	
D781,742	S	3/2017	Rafaelian	
D843,259	S	3/2019	Pucek	
2020/0022487	A1	1/2020	Weeks	

* cited by examiner

Primary Examiner — Zenia I Bennett
(74) *Attorney, Agent, or Firm* — Jason T. Daniel, Esq.; Daniel Law Offices, P.A.

(57) **CLAIM**

The ornamental design for a wristband attachment device, as shown and described.

DESCRIPTION

FIG. **1** is a top side perspective view of my design for a wristband attachment device,
FIG. **2** is a back side perspective view thereof,
FIG. **3** is a front elevation view thereof,
FIG. **4** is a back elevation view thereof
FIG. **5** is a top plan view thereof,
FIG. **6** is a bottom plan view thereof,
FIG. **7** is a right view thereof; and,
FIG. **8** is a left view thereof.
In the drawings, the broken lines are for the purpose of illustrating environment only and form no part of the claimed design.

1 Claim, 3 Drawing Sheets

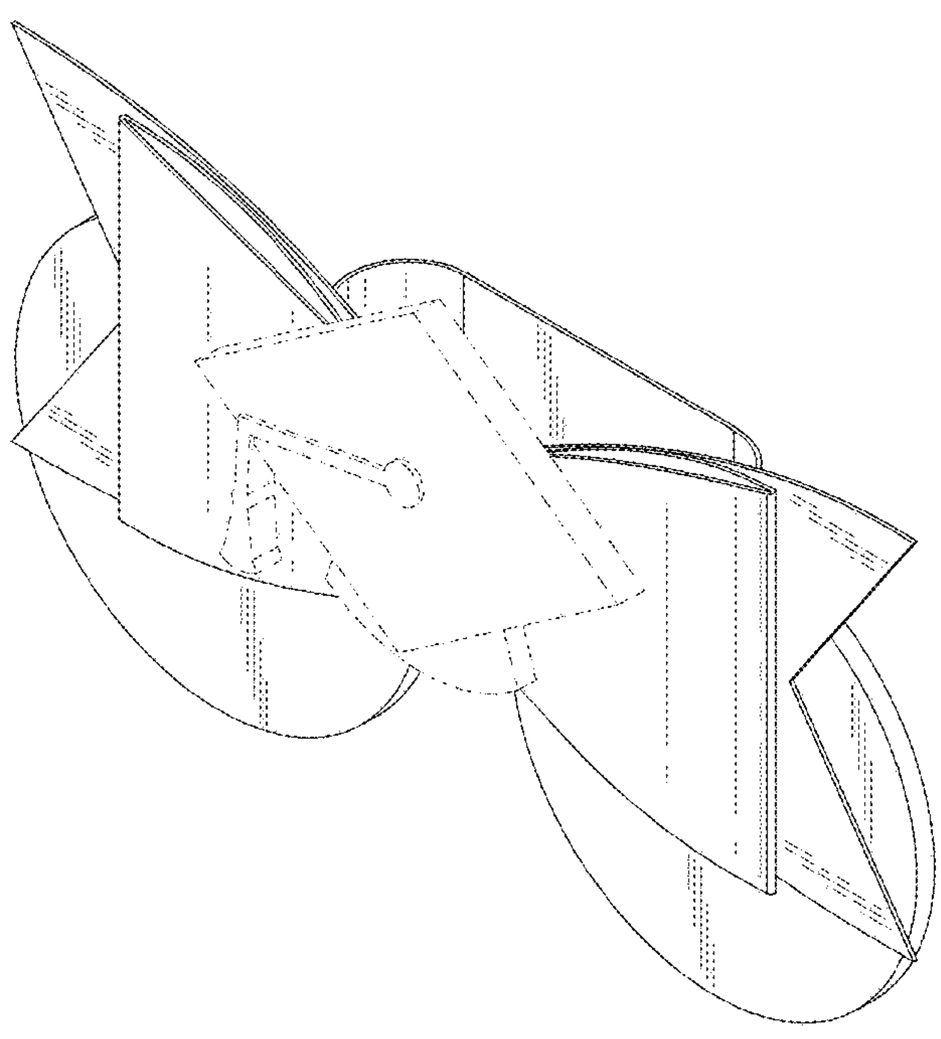

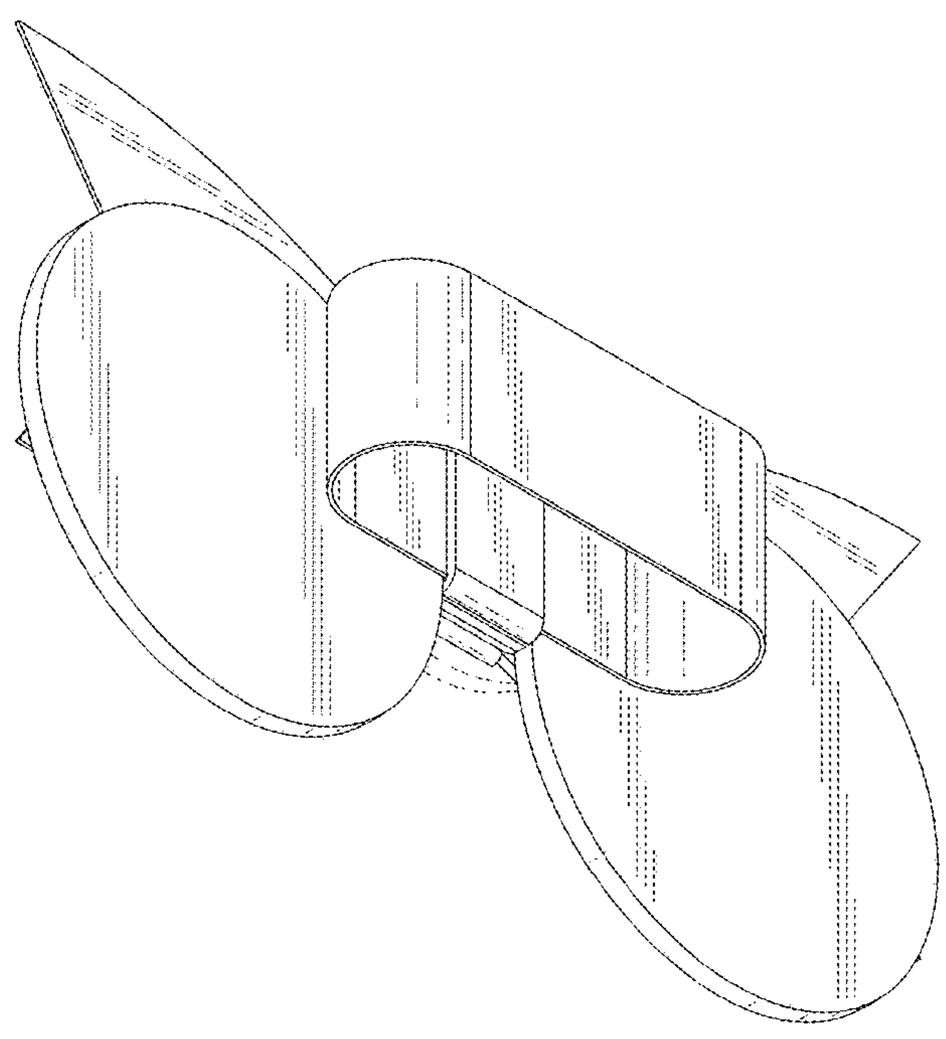

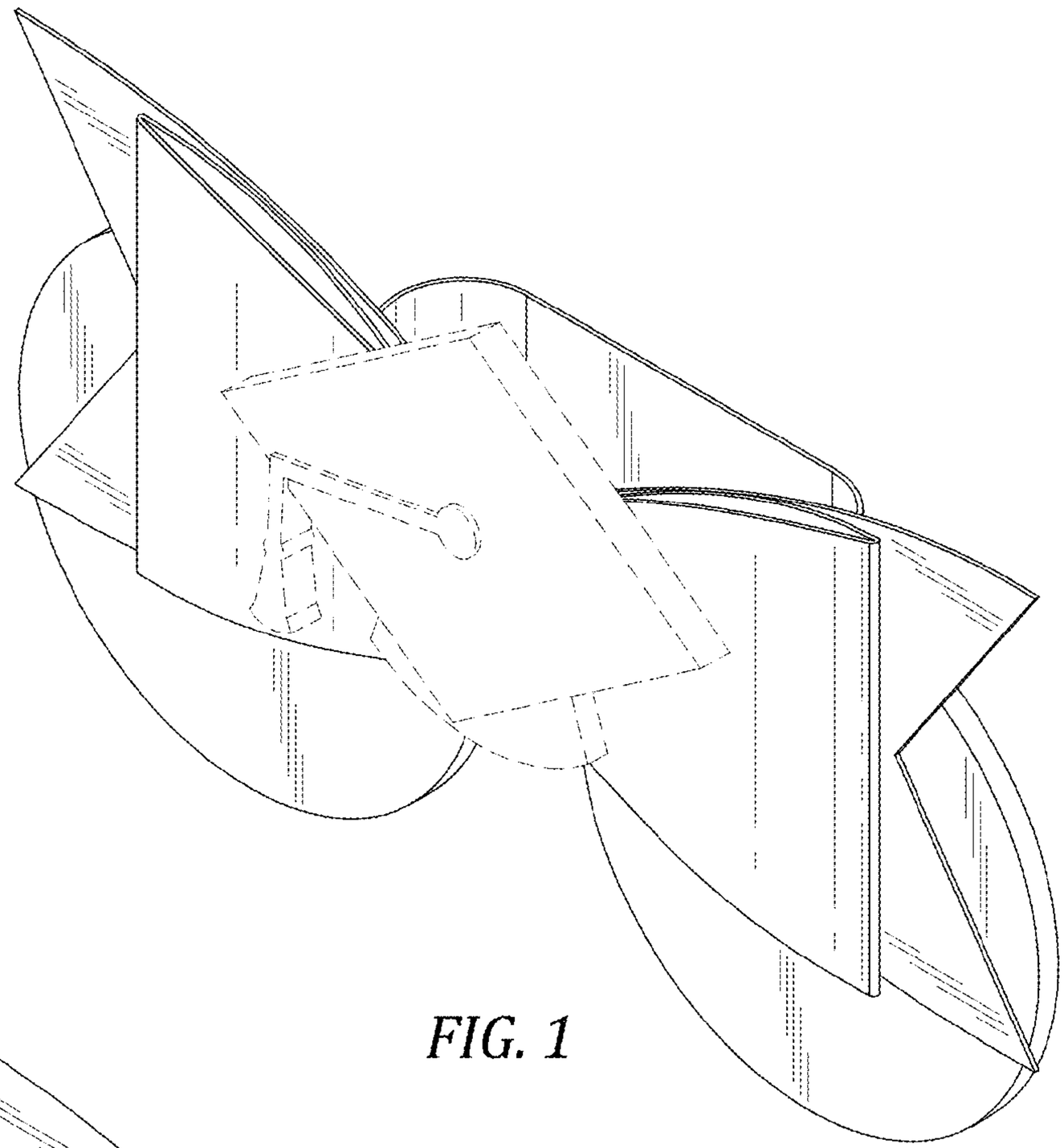

FIG. 1

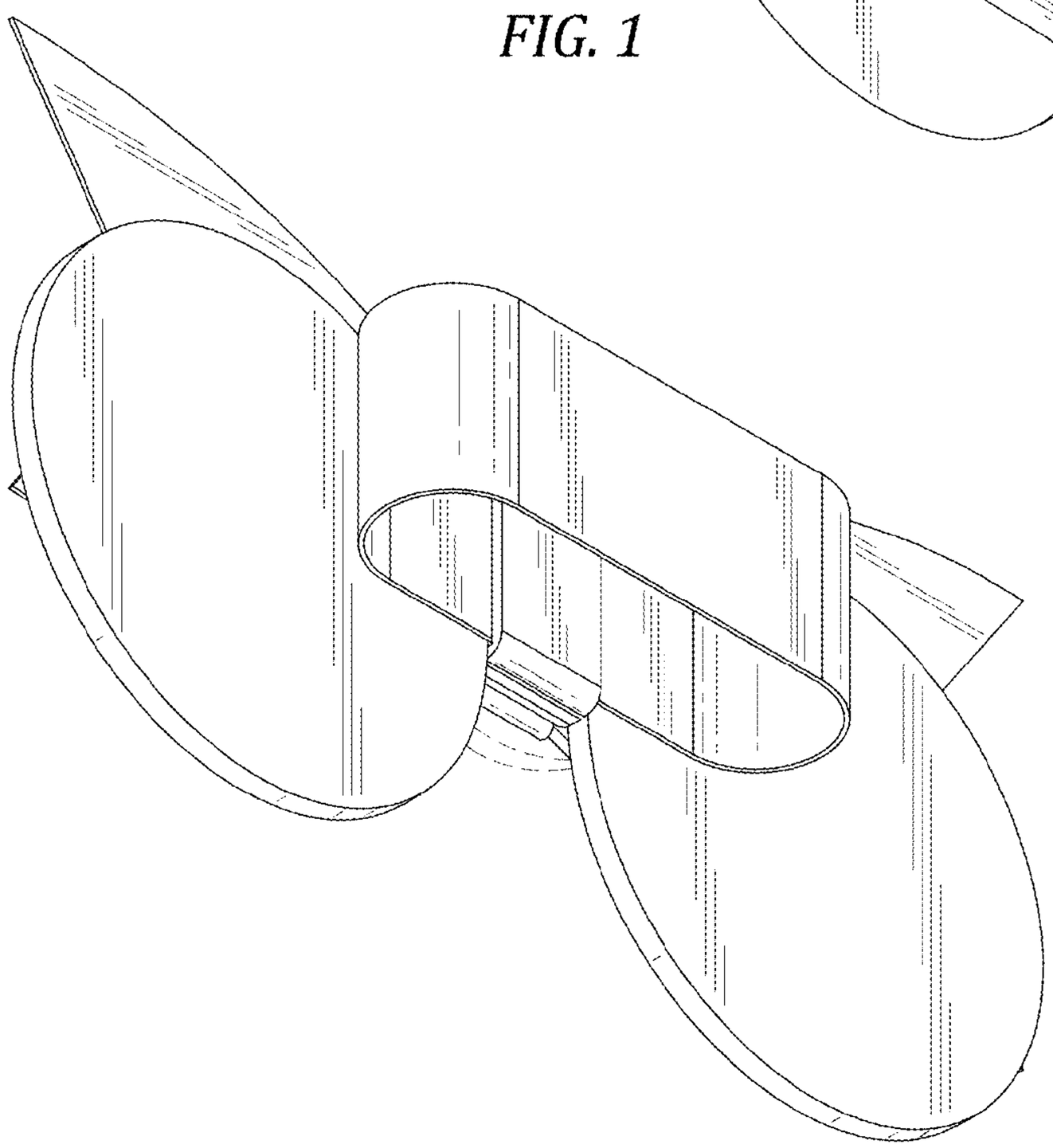

FIG. 2

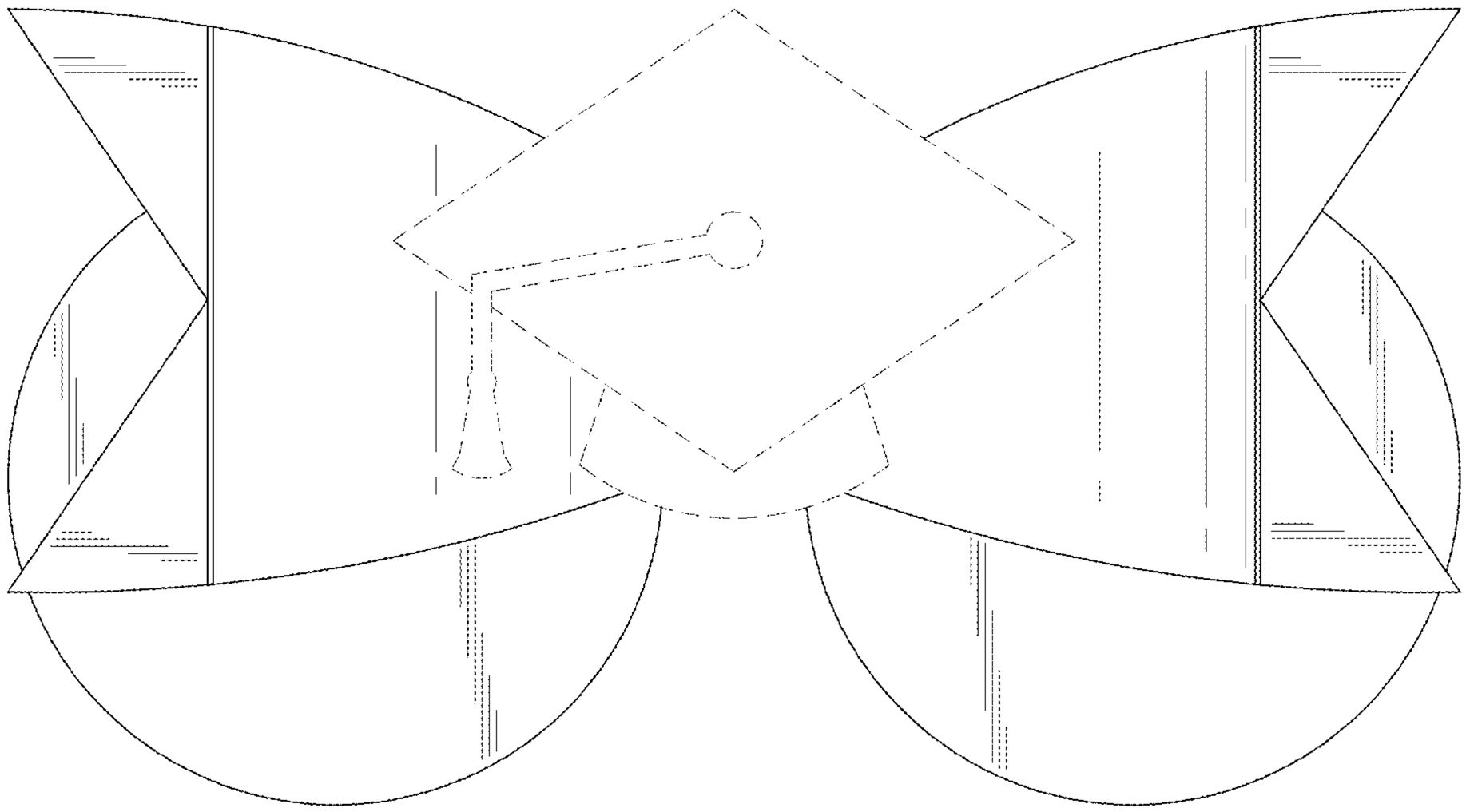

FIG. 3

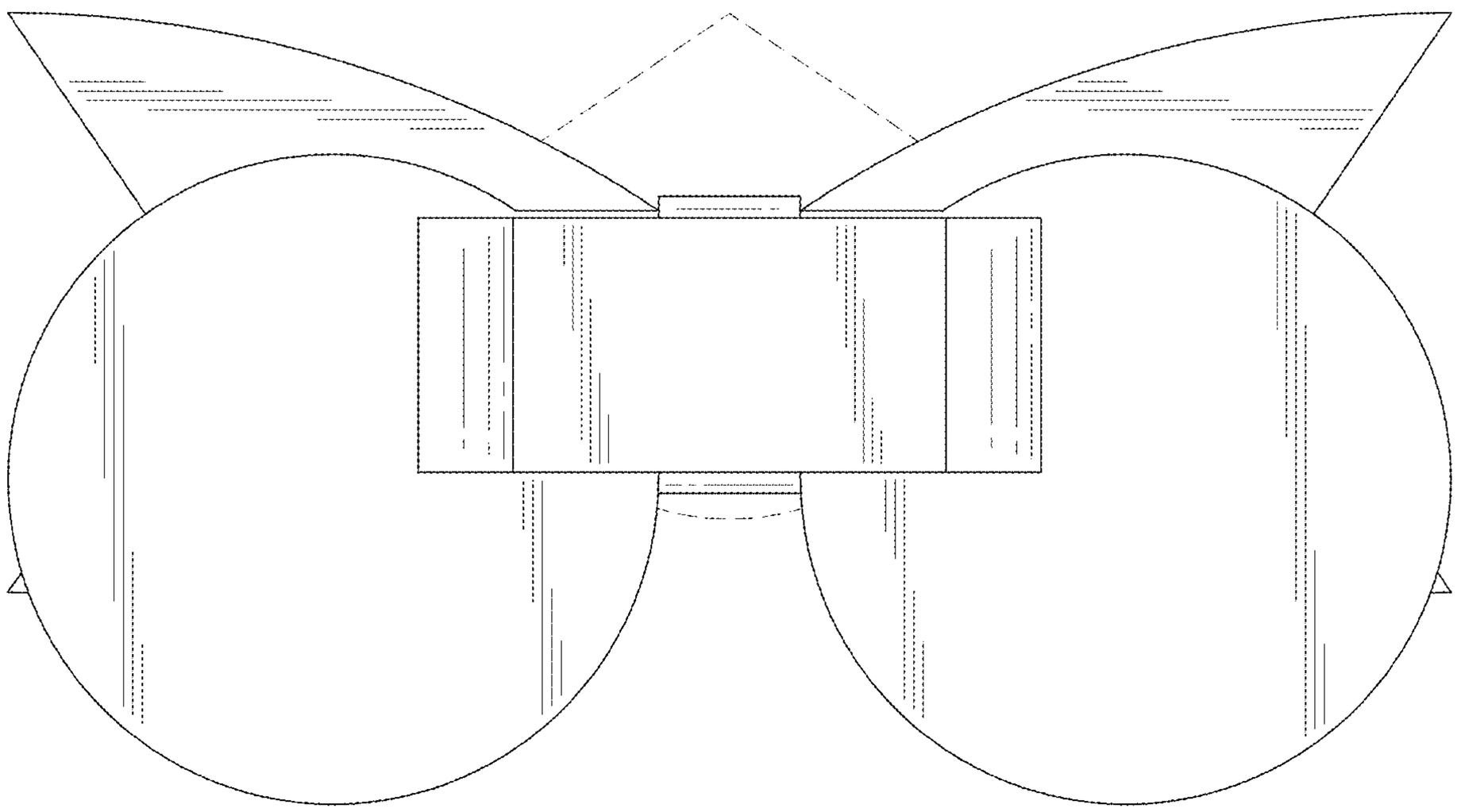

FIG. 4

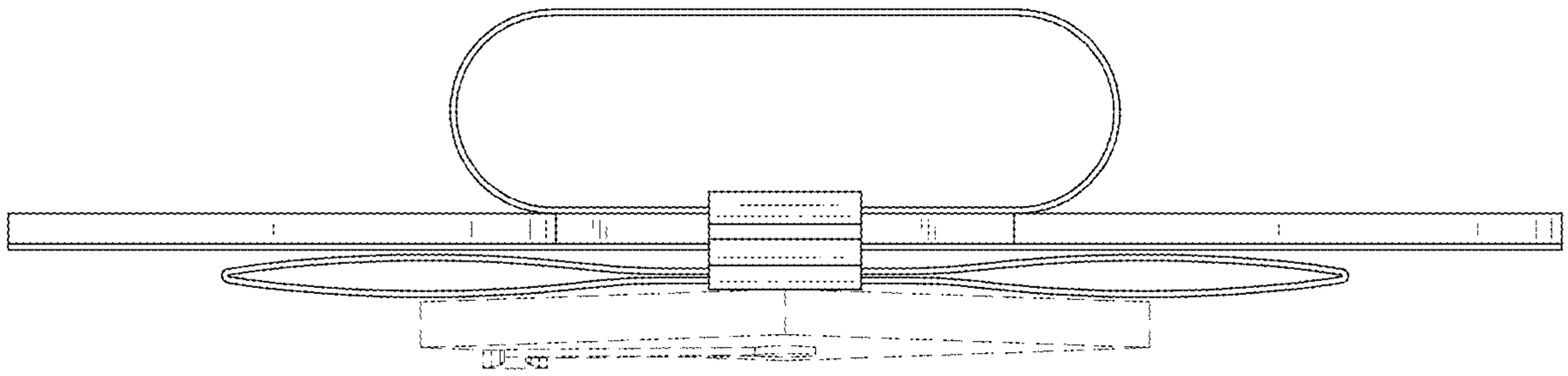

FIG. 5

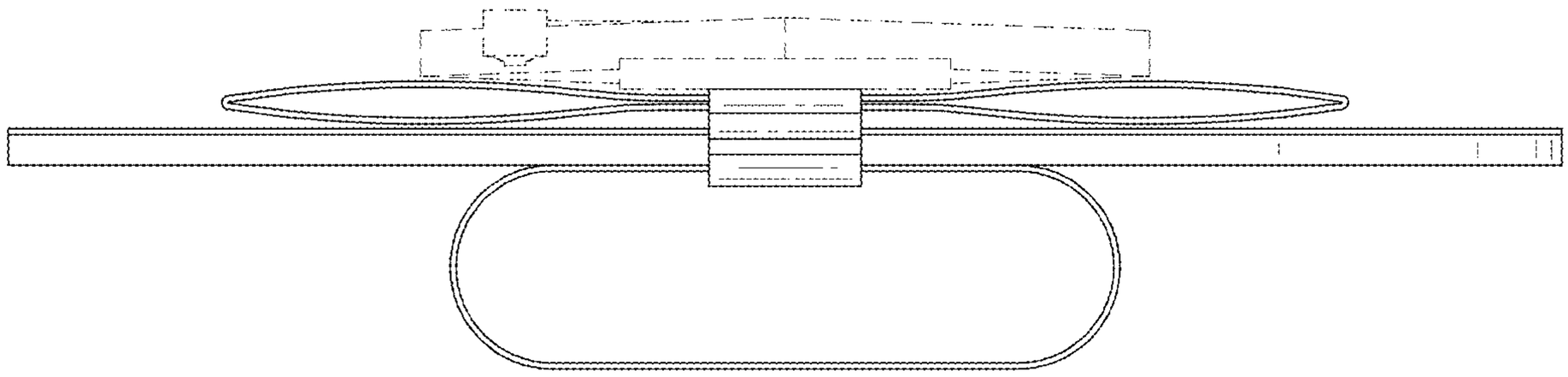

FIG. 6

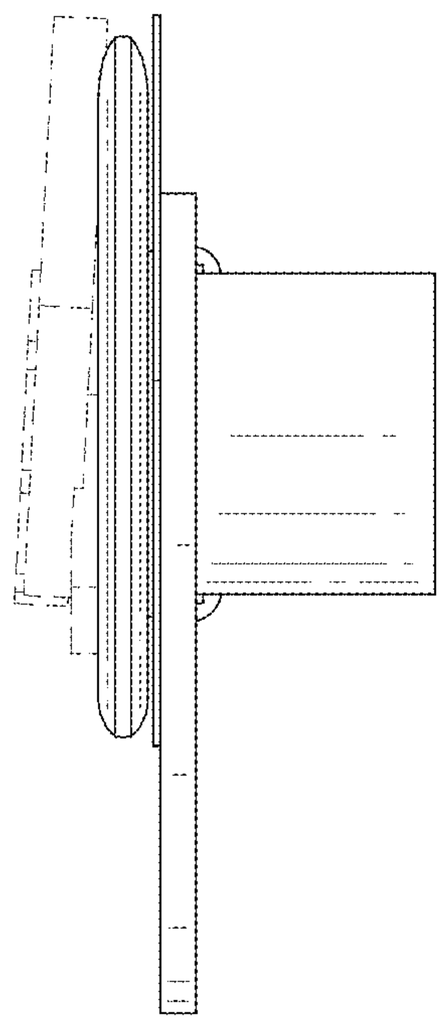

FIG. 7

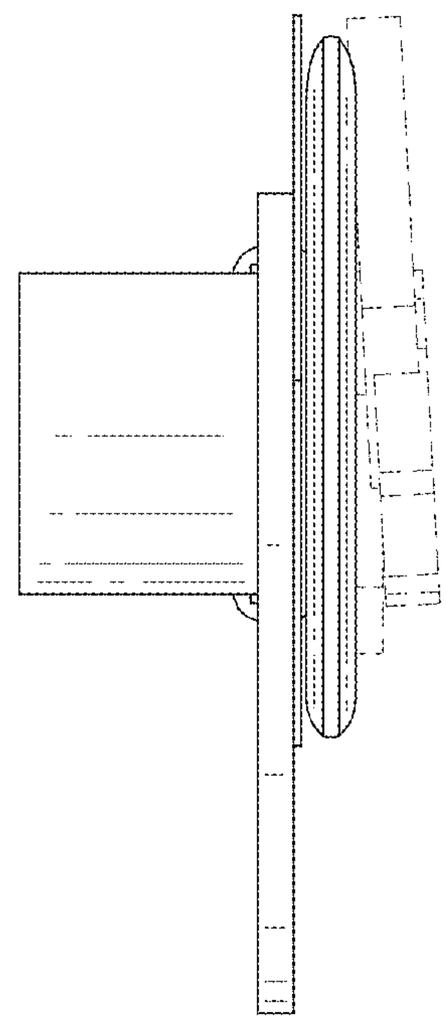

FIG. 8