US00D964553S

(12) United States Design Patent
Axon

(10) **Patent No.: US D964,553 S**
(45) **Date of Patent: ** Sep. 20, 2022**

(54) **MEDICAL INSTRUMENT**

(71) Applicant: **KEYMED (MEDICAL & INDUSTRIAL EQUIPMENT) LIMITED**, Southend-On-Sea (GB)

(72) Inventor: **Patrick Axon**, Cambridge (GB)

(73) Assignee: **KEYMED (MEDICAL & INDUSTRIAL EQUIPMENT) LIMITED**, Southend-On-Sea (GB)

(**) Term: **15 Years**

(21) Appl. No.: **35/511,926**

(22) Filed: **Nov. 27, 2020**

(80) **Hague Agreement Data**

Int. Filing Date: **Nov. 27, 2020**
Int. Reg. No.: **DM/212883**
Int. Reg. Date: **Nov. 27, 2020**
Int. Reg. Pub. Date: **May 28, 2021**

(30) **Foreign Application Priority Data**

May 29, 2020 (GB) 6090954

(51) **LOC (13) Cl.** **24-02**
(52) **U.S. Cl.**
USPC **D24/121**
CPC ***A61M 1/79*** (2021.05)
(58) **Field of Classification Search**
USPC D24/121, 123, 224; 604/317–325; 600/575
CPC A61B 10/0283; A61B 10/04; A61M 1/79; A61M 1/0058
See application file for complete search history.

(56) **References Cited**

U.S. PATENT DOCUMENTS

4,859,603 A * 8/1989 Dole B01L 3/502 422/430
5,049,273 A 9/1991 Knox
D370,263 S 5/1996 Falkenberg et al.
5,624,418 A * 4/1997 Shepard A61M 1/79 210/85
5,960,837 A 10/1999 Cude
6,627,152 B1 9/2003 Wong
D522,145 S 5/2006 Best et al.
7,458,942 B2 12/2008 Bohannon et al.
7,488,312 B2 2/2009 Rogers et al.
7,497,340 B2 3/2009 Hershberger et al.
7,517,495 B2 4/2009 Wu et al.
8,974,399 B2 3/2015 Teixeira et al.
D735,880 S 8/2015 Bargh et al.
9,332,969 B2 5/2016 Han et al.
(Continued)

FOREIGN PATENT DOCUMENTS

EP 1234589 A1 8/2002
WO 2013180952 A1 12/2013
WO 2017060726 A1 4/2017

Primary Examiner — Richard E Chilcot
(74) *Attorney, Agent, or Firm* — Kilyk & Bowersox, P.L.L.C.

(57) **CLAIM**

The ornamental design for a medical instrument, as shown and described.

DESCRIPTION

1. Medical instrument
1.1 : Front
1.2 : Back
1.3 : Left
1.4 : Right
1.5 : Top
1.6 : Bottom
1.7 : Perspective
1.8 : Exploded

A medical instrument; representations show front, back, left, right, top, bottom, perspective and exploded views; features shown in dotted or dashed lines are disclaimed and do not form part of the design; contour lines show surface shapes.

1 Claim, 8 Drawing Sheets

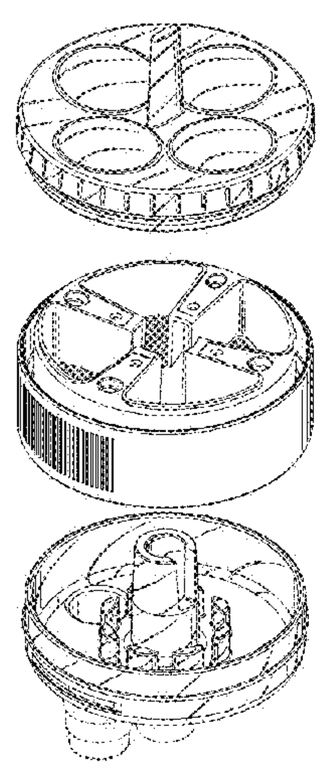

(56) **References Cited**

U.S. PATENT DOCUMENTS

9,671,318	B1 *	6/2017	Bedoe	A61B 10/02
D820,996	S	6/2018	Knaus et al.	
D846,732	S *	4/2019	Axon	D24/121
D846,733	S *	4/2019	Axon	D24/121
10,835,650	B2 *	11/2020	Axon	A61B 10/0283
D954,987	S *	6/2022	Veenendaal	D24/224
2003/0236507	A1 *	12/2003	Brigham	A61M 1/79 604/317
2004/0230135	A1 *	11/2004	Merkle	A61M 1/79 600/575
2007/0191731	A1	8/2007	Kaye et al.	
2012/0053484	A1 *	3/2012	Parks	A61M 1/0001 600/562
2014/0121560	A1 *	5/2014	Parks	A61B 10/02 600/562

* cited by examiner

1.1

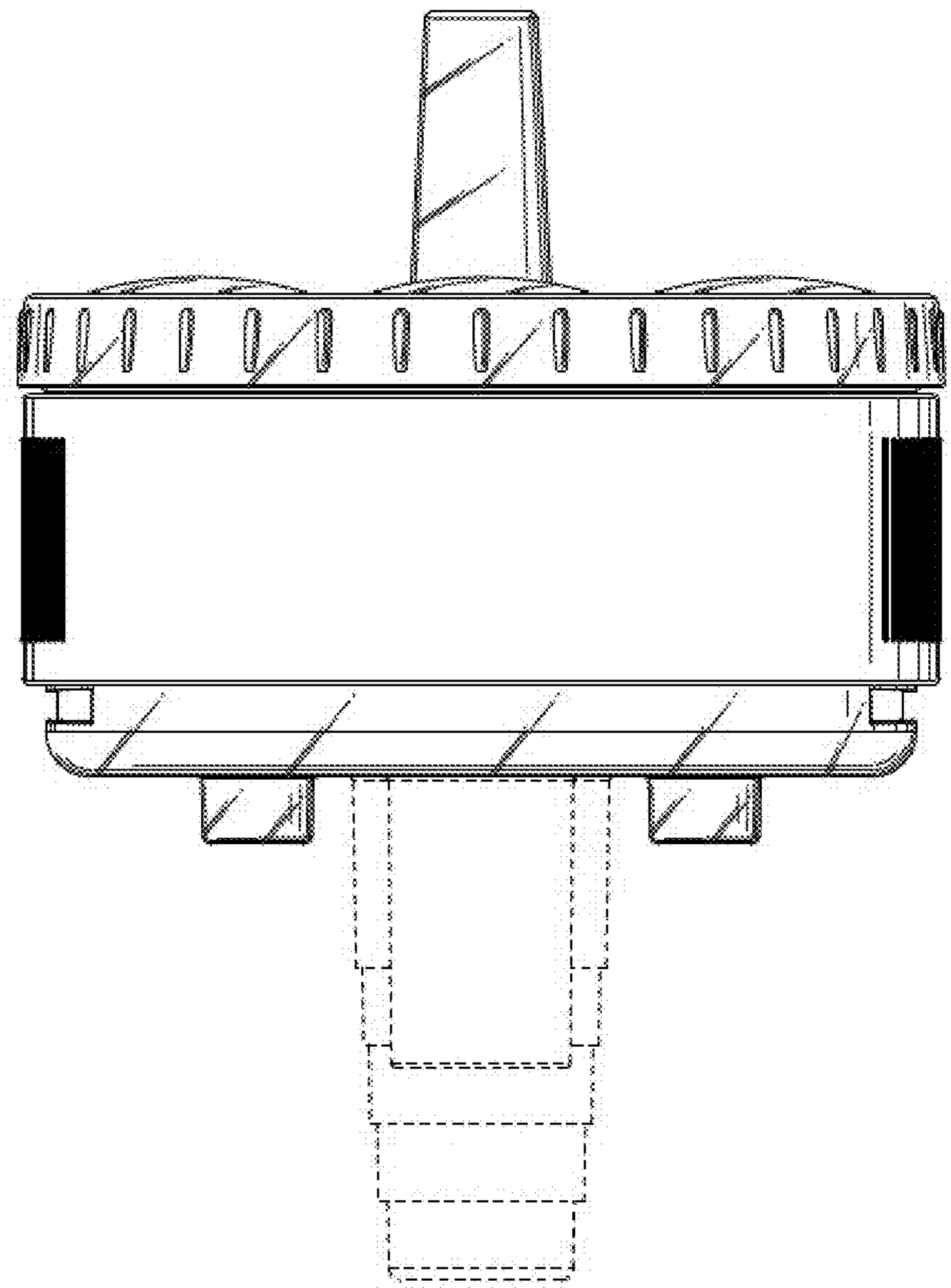

1.2

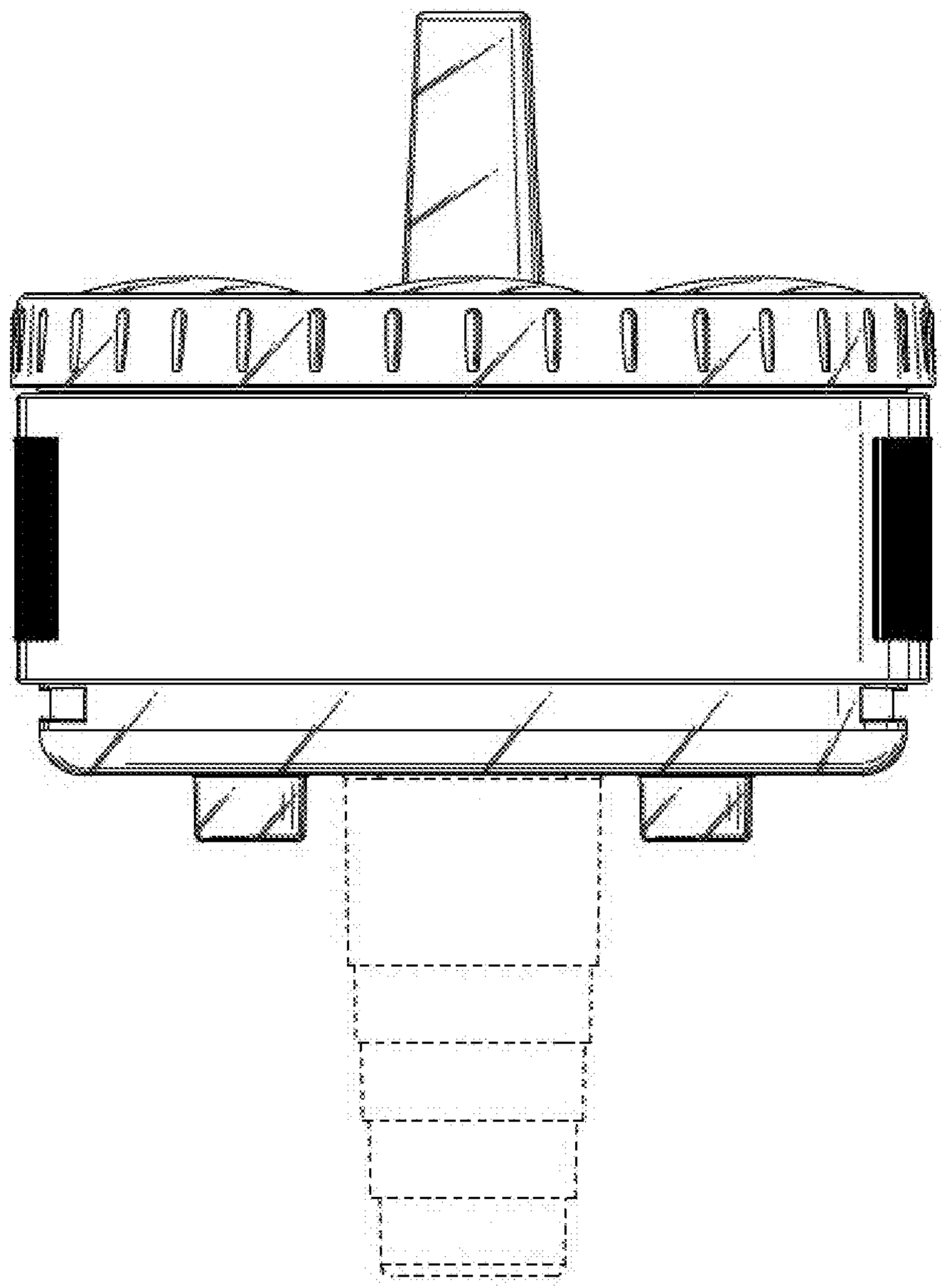

1.3

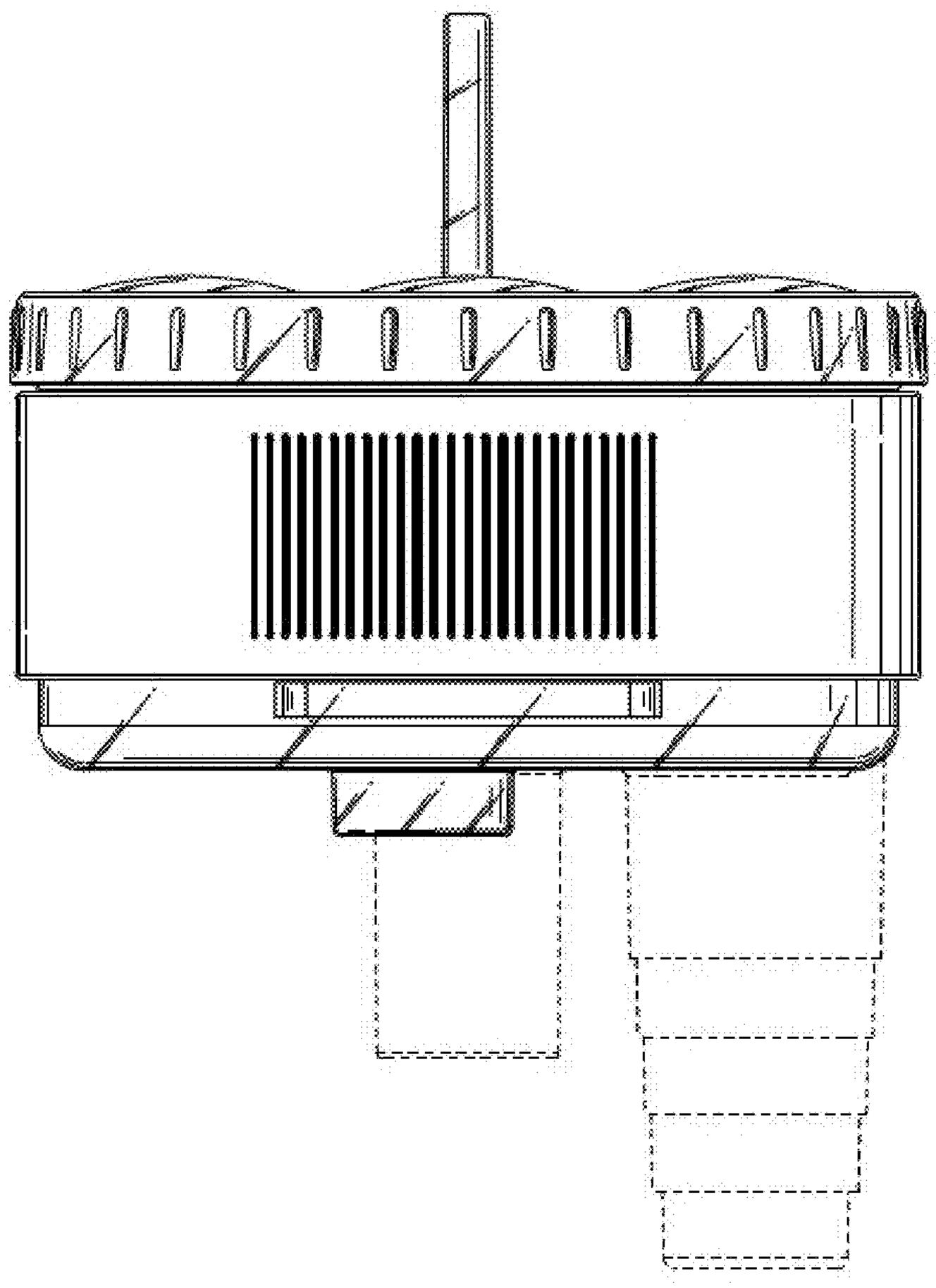

1.4

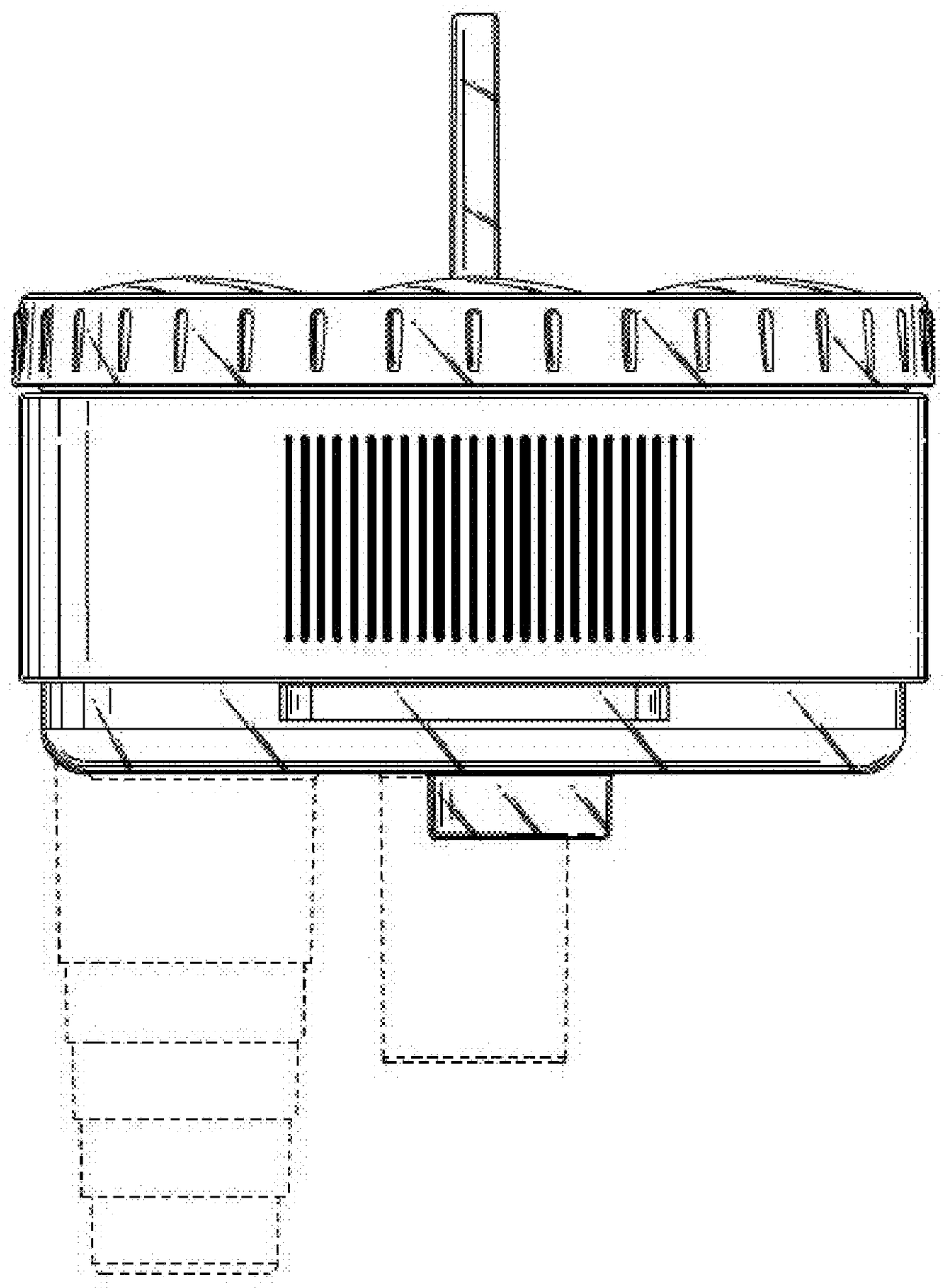

1.5

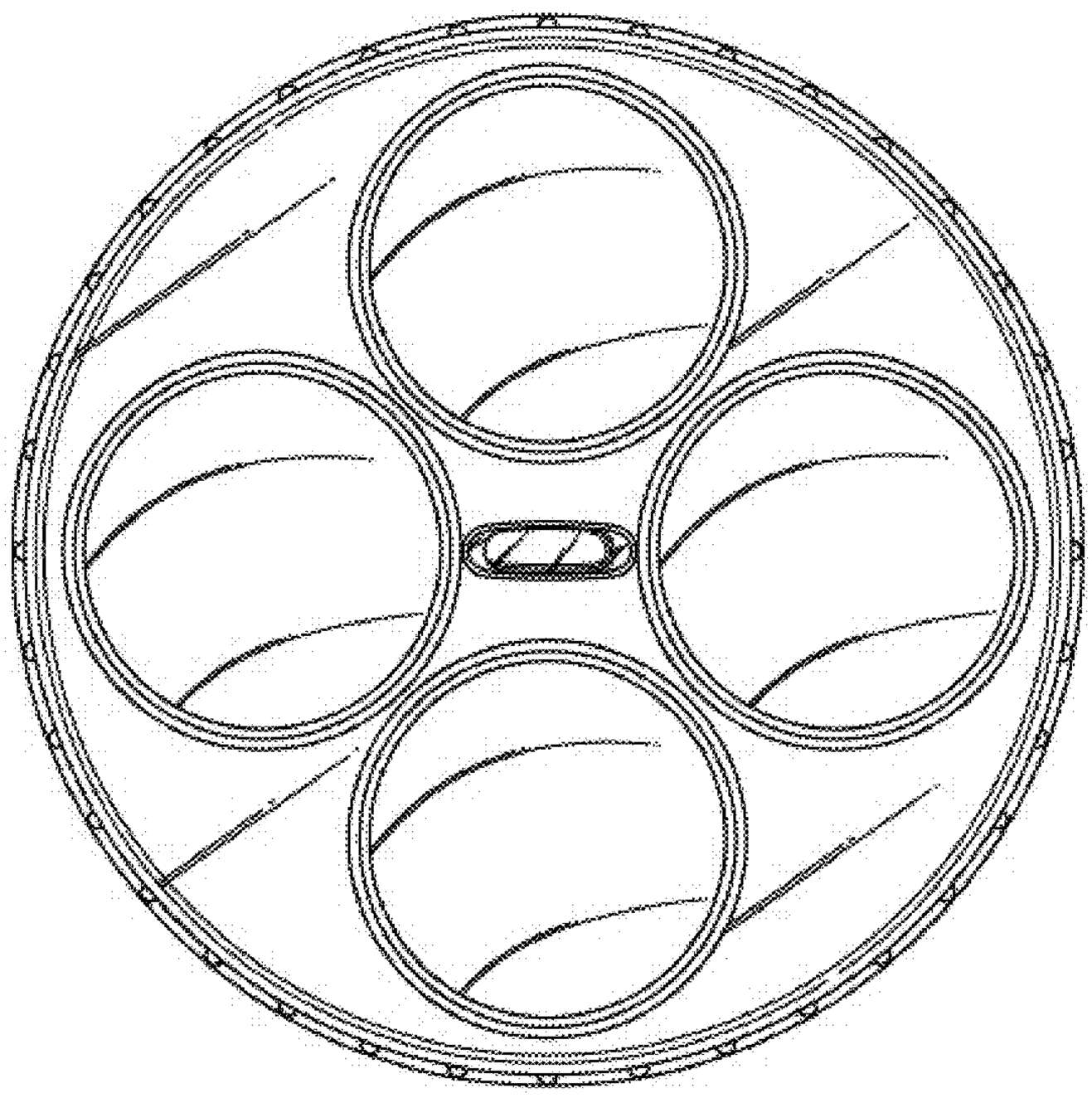

1.6

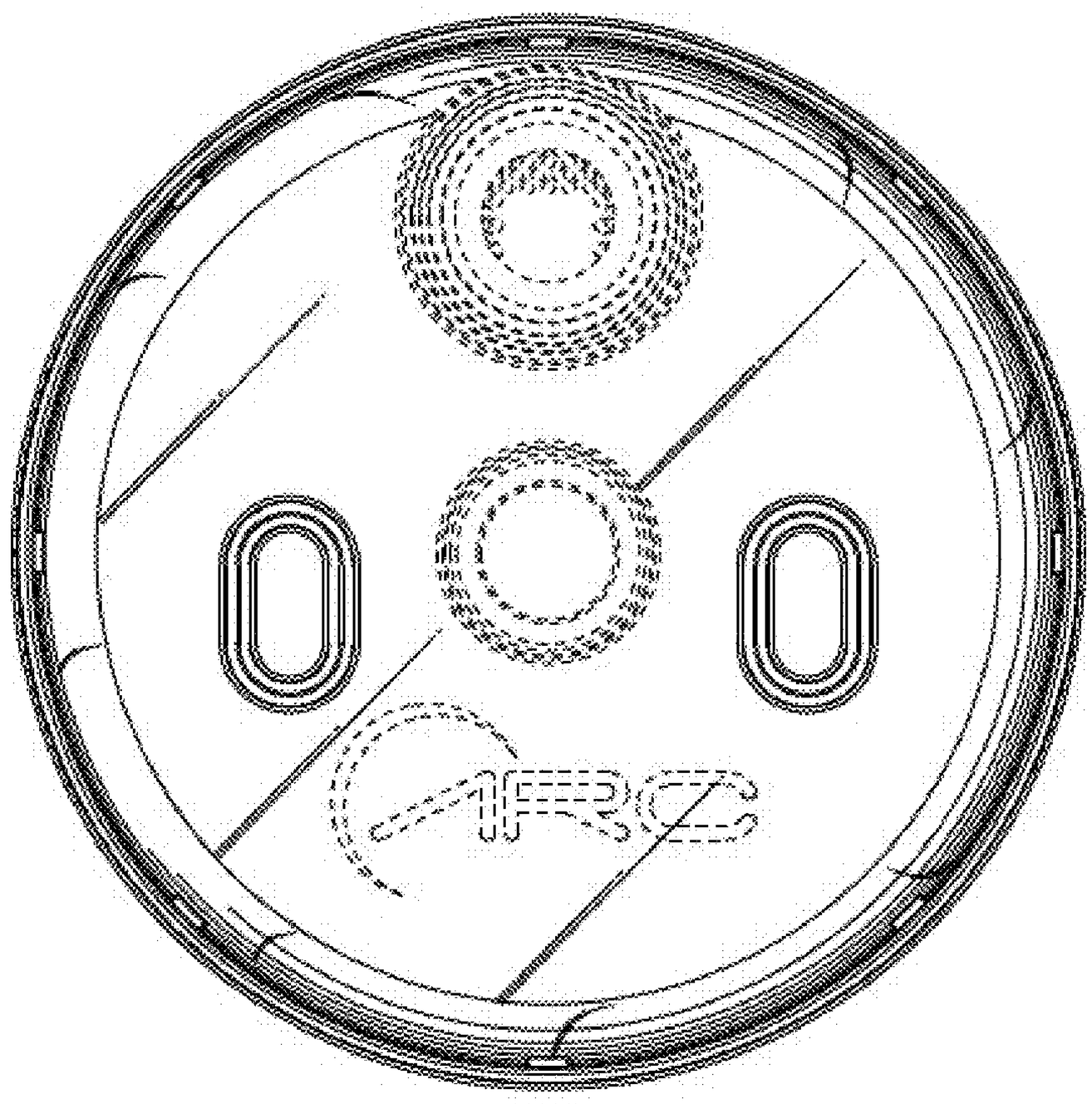

1.7

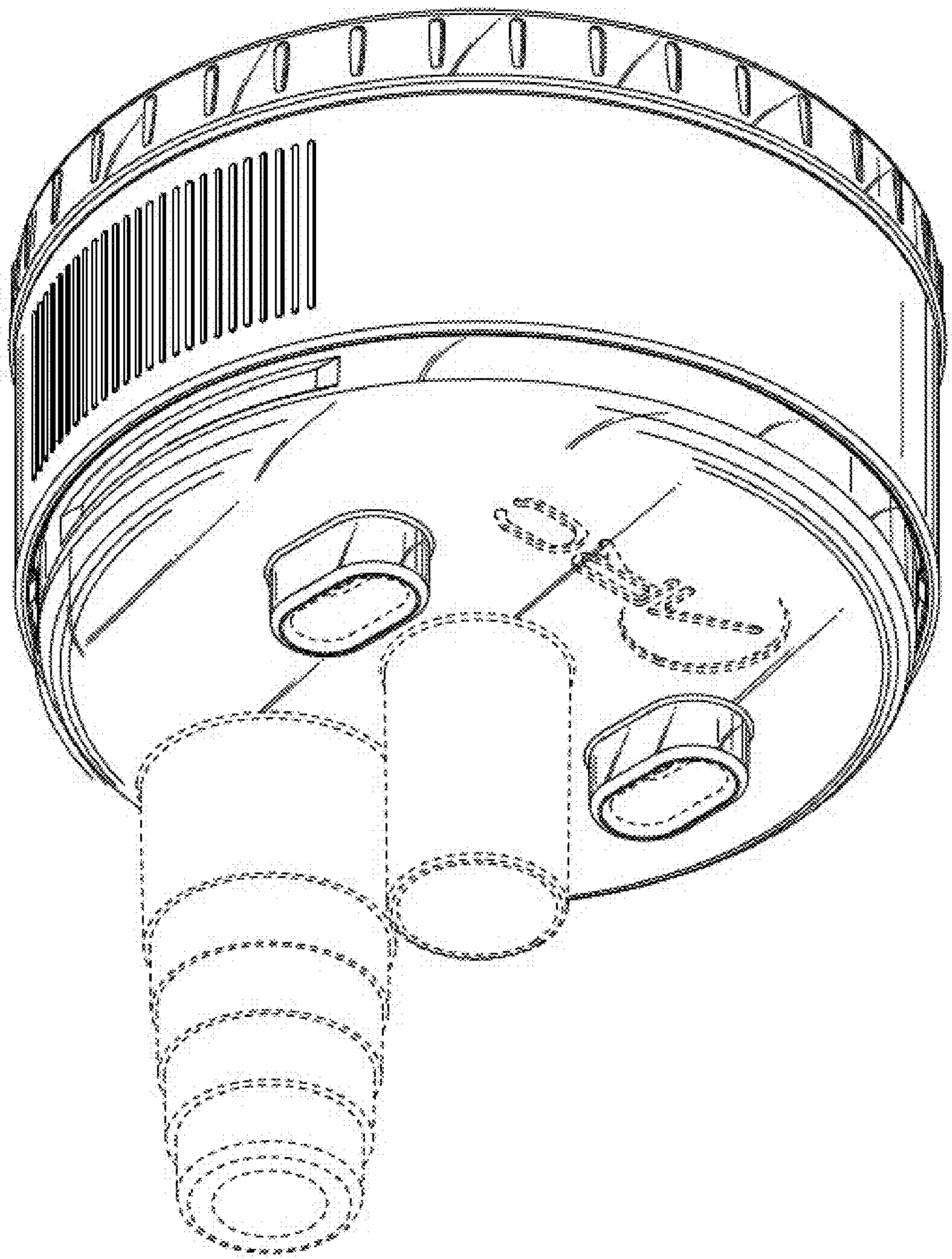
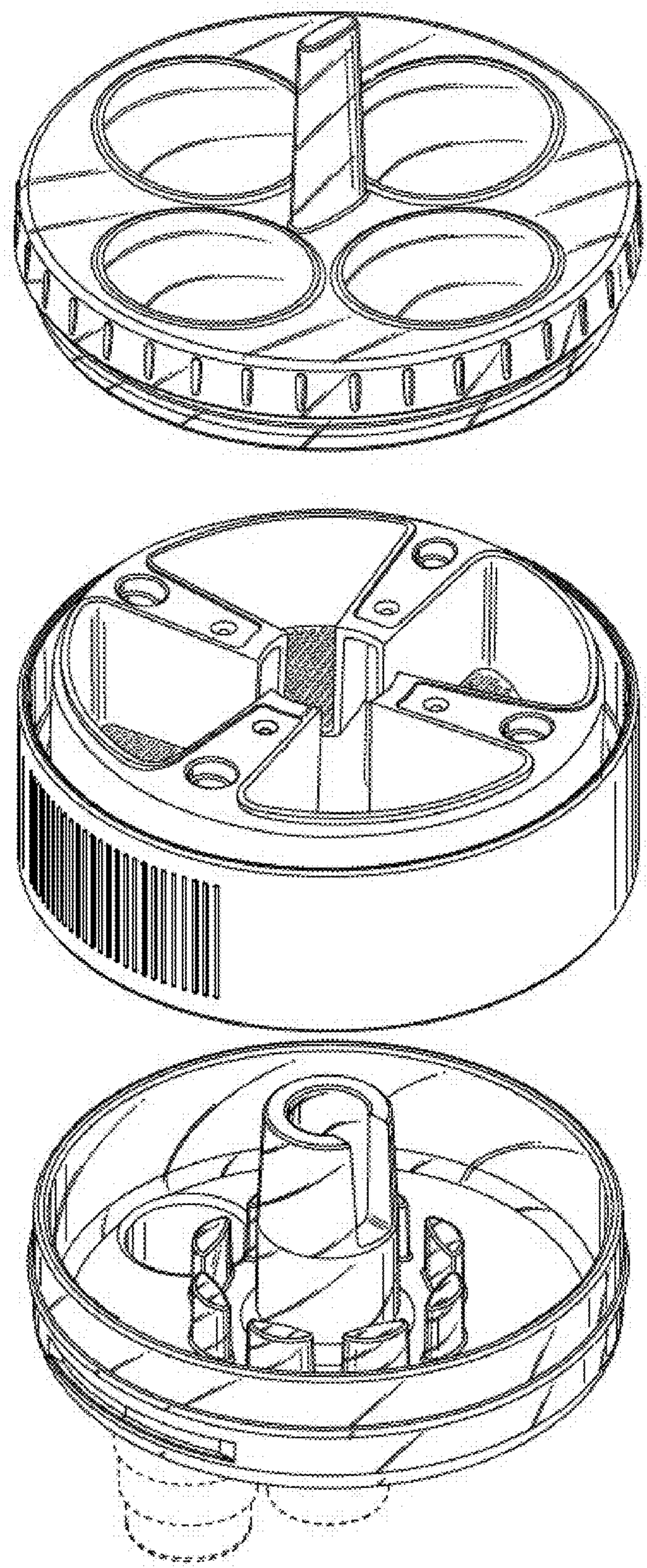
1.8