US00D964443S

(12) United States Design Patent

Murata

(10) Patent No.: US D964,443 S
(45) Date of Patent: ** Sep. 20, 2022

(54) **GAS INLET ATTACHMENT FOR WAFER PROCESSING APPARATUS**

(71) Applicant: **KOKUSAI ELECTRIC CORPORATION**, Tokyo (JP)

(72) Inventor: **Satoru Murata**, Toyama (JP)

(73) Assignee: **KOKUSAI ELECTRIC CORPORATION**, Tokyo (JP)

(**) Term: **15 Years**

(21) Appl. No.: **29/770,855**

(22) Filed: **Feb. 17, 2021**

(30) **Foreign Application Priority Data**

Aug. 18, 2020 (JP) ..... 2020-017141 D

(51) **LOC (13) Cl.** **15-09**

(52) **U.S. Cl.**
USPC **D15/144.1**

(58) **Field of Classification Search**
USPC D13/122, 182, 184, 199; D15/144, D15/144.1, 144.2; D8/2, 382
CPC . C23C 16/00; C23C 16/455; C23C 16/45502; C23C 16/45504; C23C 16/45506; C23C 16/45508; C23C 16/4551; C23C 16/45512; C23C 16/45514; C23C 16/45517; C23C 16/45563; C23C 16/4557; C23C 16/45576; C23C 16/45578; C23C 16/402; C23C 16/4584; C23C 16/45587; C23C 16/45525; C23C 16/45544; C23C 16/46; C23C 16/45527; C23C 16/4412; H01L 21/00; H01L 21/02; H01L 21/02263; H01L 21/31; H01L 21/205; H01L 21/0228; H01L 21/02164
See application file for complete search history.

(56) **References Cited**

U.S. PATENT DOCUMENTS

3,484,122	A	*	12/1969	Sanders	E21B 17/1085 175/325.2
D326,272	S	*	5/1992	Nakao	D15/144.1
D720,051	S	*	12/2014	Dole	D23/266
D818,509	S	*	5/2018	Miyazaki	D15/144.2
D827,150	S	*	8/2018	Nakagawa	D24/224
D872,843	S	*	1/2020	Stoffa, Sr.	D23/262
D873,392	S	*	1/2020	Hruschak	D23/266
D890,572	S	*	7/2020	Saiki	D23/213
D901,564	S		11/2020	Murata et al.	
D924,953	S	*	7/2021	Shimada	D15/144.1
D944,661	S	*	3/2022	Sambu	D10/49

(Continued)

FOREIGN PATENT DOCUMENTS

JP	1648531	S	2/2019
JP	1624352	S	12/2019

Primary Examiner — Patricia A Palasik
(74) *Attorney, Agent, or Firm* — Fitch, Even, Tabin & Flannery, LLP

(57) **CLAIM**

The ornamental design for a gas inlet attachment for wafer processing apparatus, as shown and described.

DESCRIPTION

FIG. **1** is a front, top and right side perspective view of a gas inlet attachment for wafer processing apparatus showing our new design;
FIG. **2** is a front elevational view thereof;
FIG. **3** is a left side elevational view thereof;
FIG. **4** is a right side elevational view thereof;
FIG. **5** is a rear elevational view thereof;
FIG. **6** is a top plan view thereof;
FIG. **7** is a bottom plan view thereof; and,
(Continued)

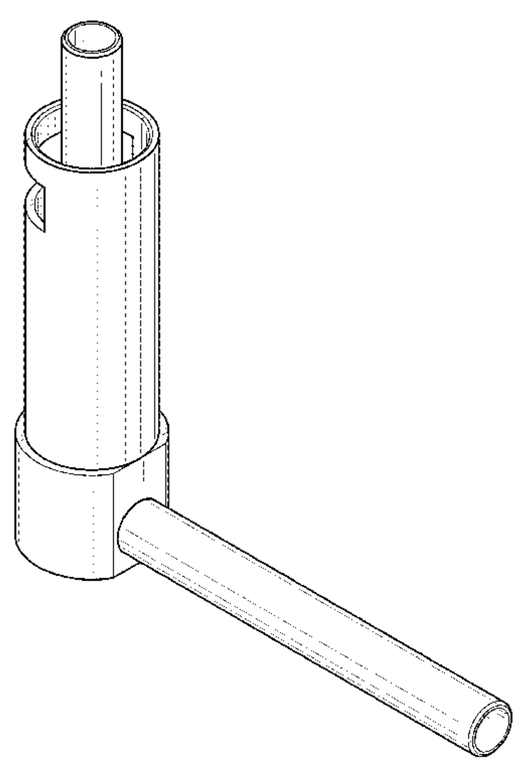

FIG. **8** is a cross sectional view taken along line **8-8** in FIG. **4**.

1 Claim, 6 Drawing Sheets

(56) **References Cited**

U.S. PATENT DOCUMENTS

2013/0220221	A1*	8/2013	Sanchez	C23C 16/4483 118/712
2017/0051408	A1*	2/2017	Takagi	C23C 16/45531
2017/0241015	A1*	8/2017	Sim	C23C 16/4412

* cited by examiner

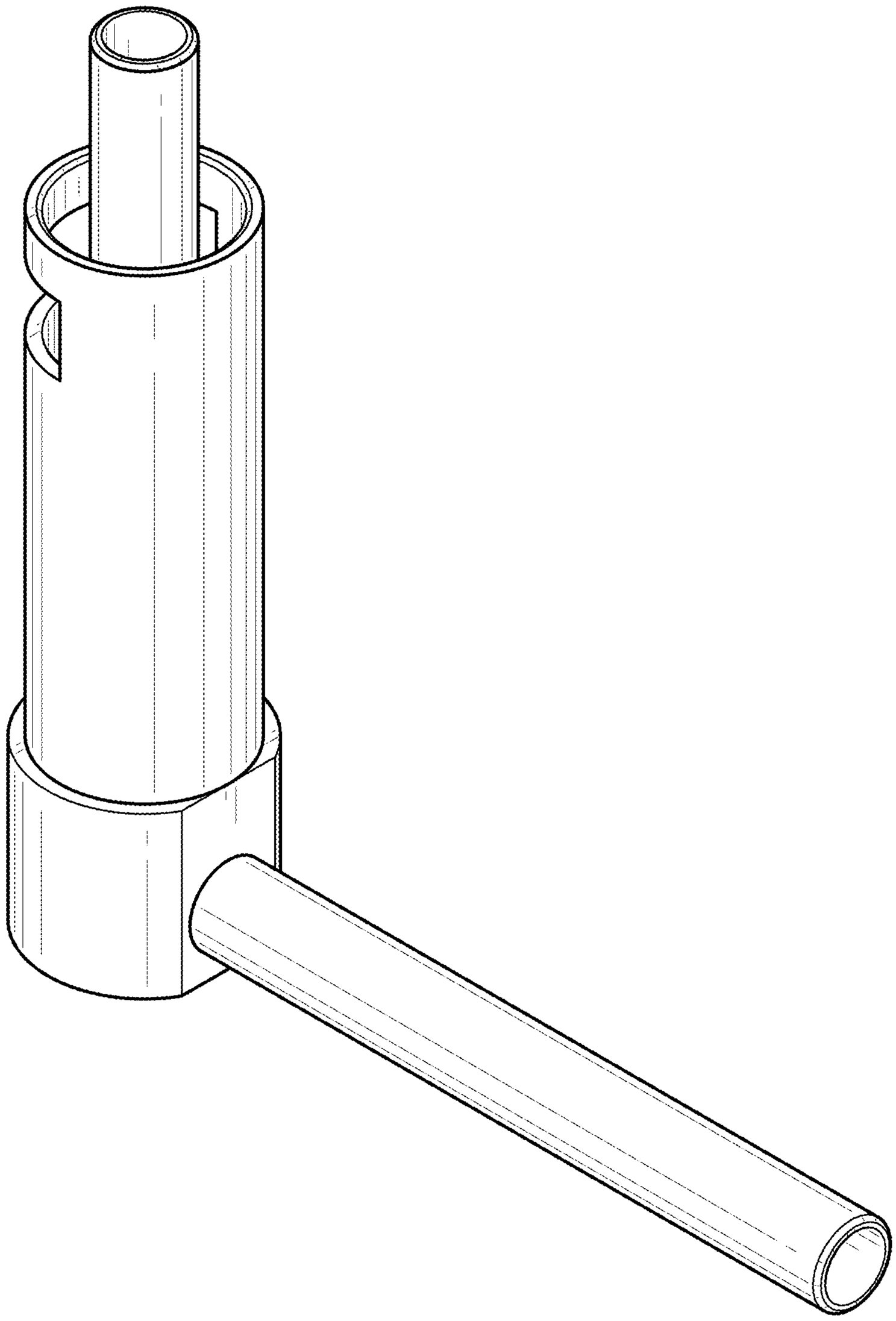

FIG. 1

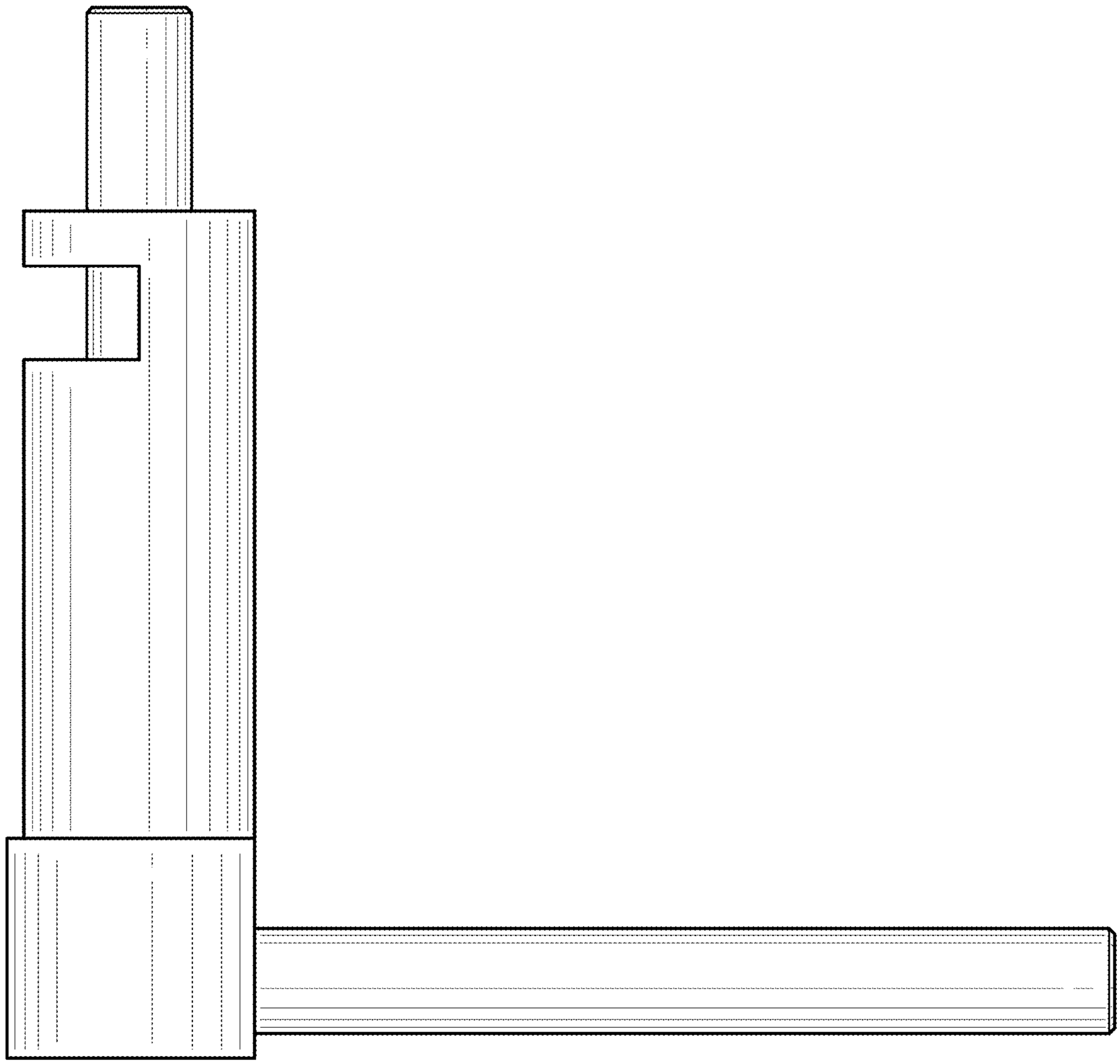

FIG. 2

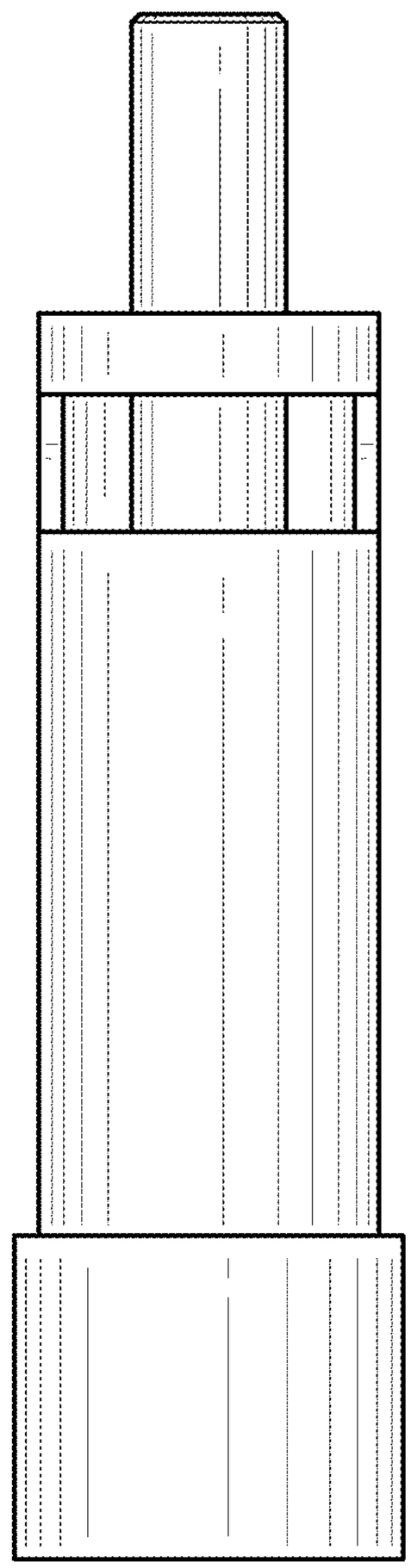

FIG. 3

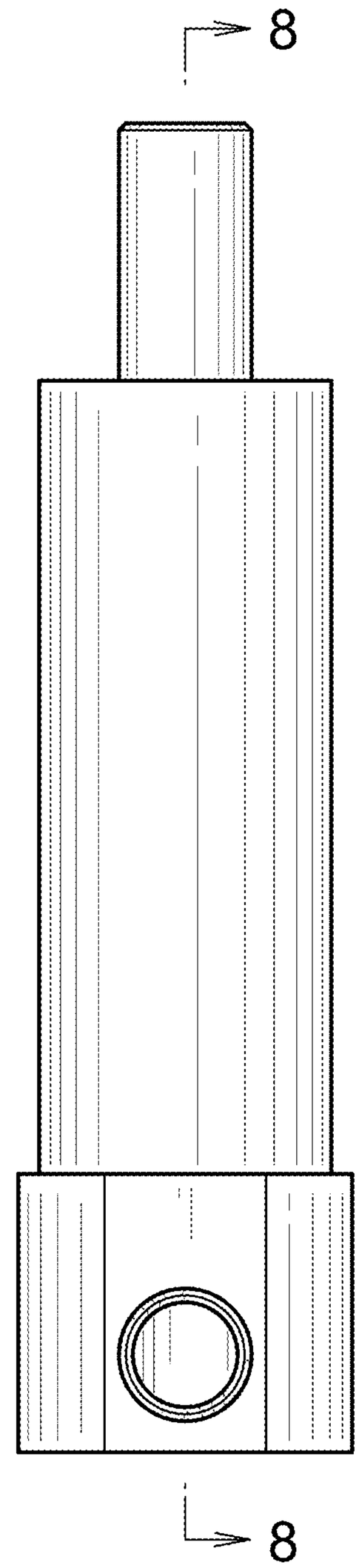

FIG. 4

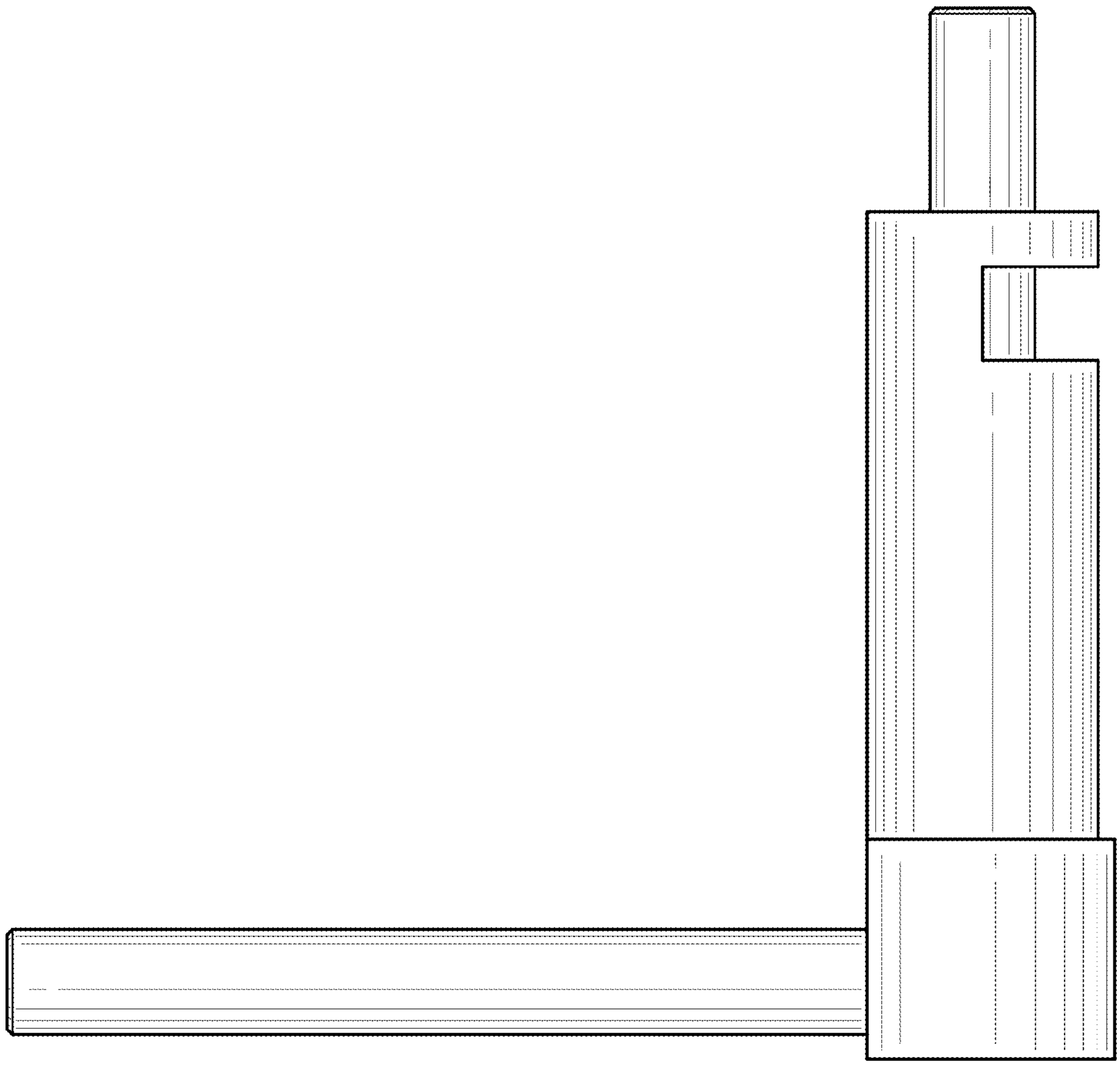

FIG. 5

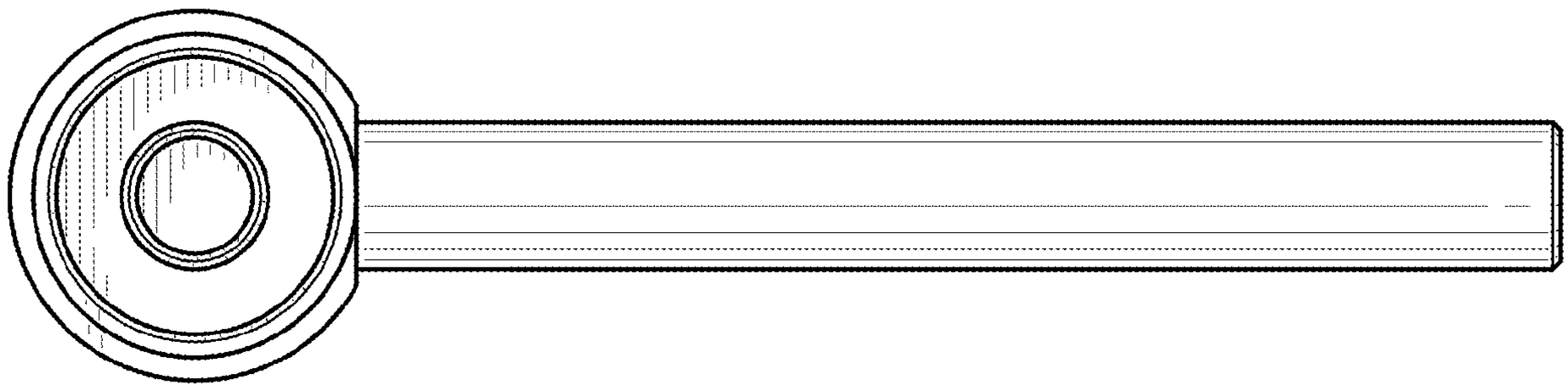

FIG. 6

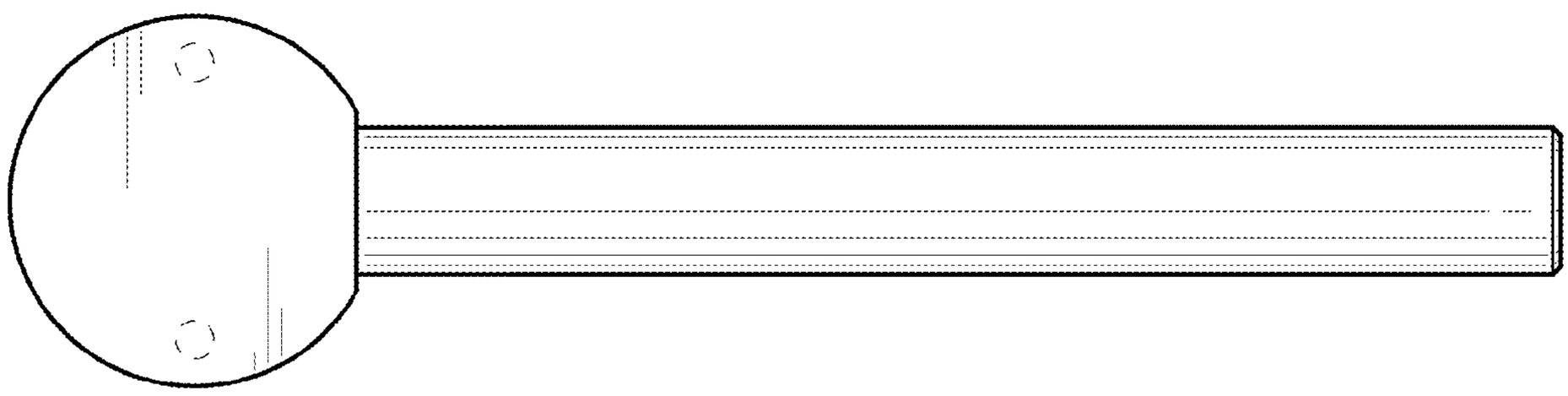

FIG. 7

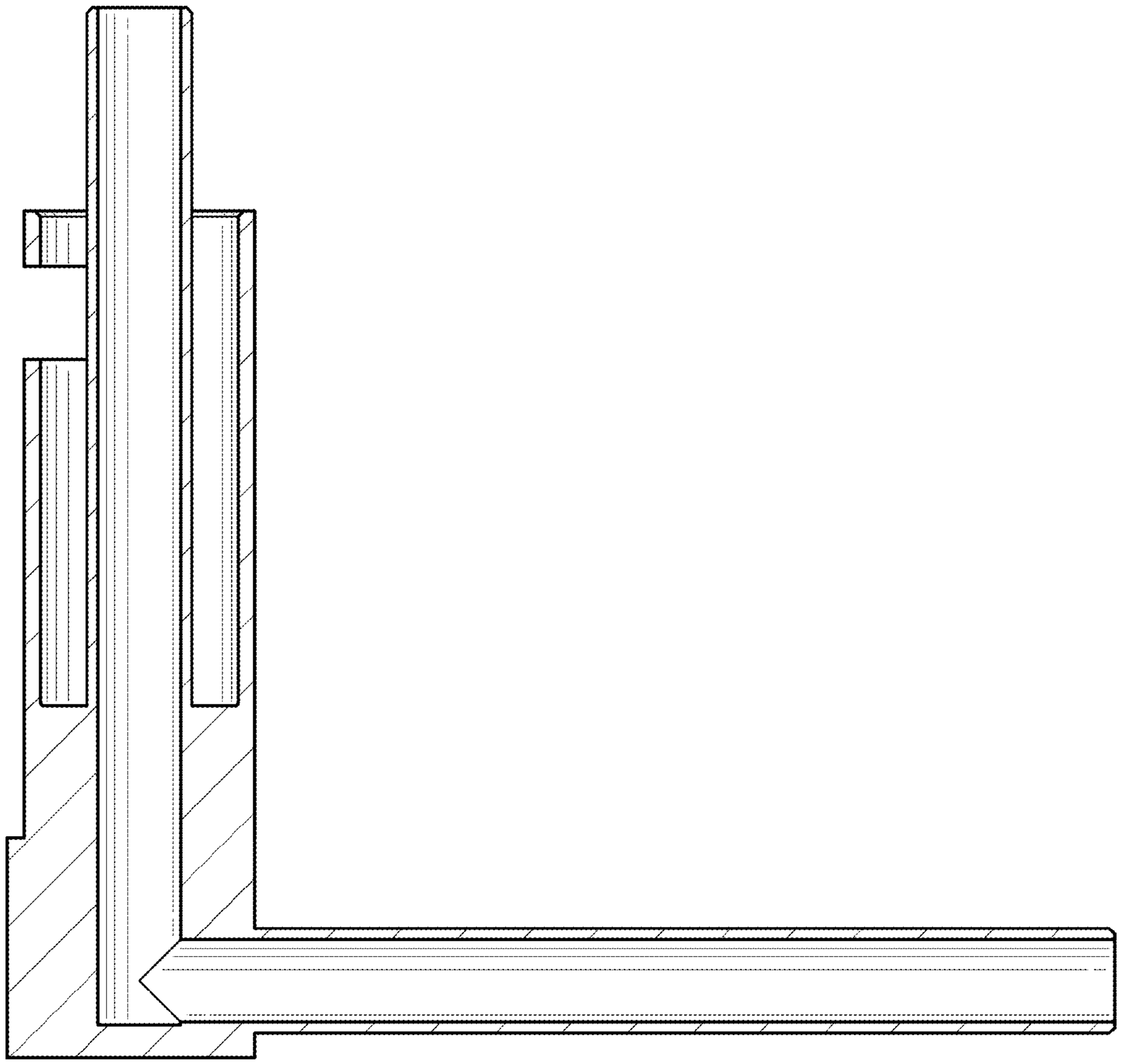

FIG. 8