US00D964375S

(12) United States Design Patent
Xie

(10) Patent No.: US D964,375 S
(45) Date of Patent: ** Sep. 20, 2022

(54) **DISPLAY MOUNT**

(71) Applicant: **SHENZHEN BESTQI INNOVATION TECHNOLOGY CO., LTD**, Shenzhen (CN)

(72) Inventor: **Menghong Xie**, Shenzhen (CN)

(73) Assignee: **SHENZHEN BESTQI INNOVATION TECHNOLOGY CO., LTD**, Shenzhen (CN)

(**) Term: **15 Years**

(21) Appl. No.: **29/769,021**

(22) Filed: **Feb. 3, 2021**

(51) **LOC (13) Cl.** **14-02**

(52) **U.S. Cl.**
USPC **D14/452**

(58) **Field of Classification Search**
USPC D14/239, 371–382, 125–129, 336–337, D14/447–452, 492, 335, 432, 251–253
See application file for complete search history.

(56) **References Cited**

U.S. PATENT DOCUMENTS

D537,706	S	*	3/2007	Ly Hau	D8/363
D565,938	S	*	4/2008	Massoumi	D8/363
D816,646	S	*	5/2018	Pei	D14/239
D822,011	S	*	7/2018	Namala	D14/239
D841,631	S	*	2/2019	Pei	D14/239
D842,284	S	*	3/2019	Pei	D14/239
D848,988	S	*	5/2019	Pei	D14/239
D852,805	S	*	7/2019	Lyu	D14/452
D877,746	S	*	3/2020	Pei	D14/452
D878,382	S	*	3/2020	Pei	D14/452
D912,027	S	*	3/2021	Lyu	D14/239
D915,361	S	*	4/2021	Pei	D14/239
D915,362	S	*	4/2021	Pei	D14/239
D918,217	S	*	5/2021	Lyu	D14/452
D918,928	S	*	5/2021	Jia	D14/452
D925,509	S	*	7/2021	Jin	D14/239

(Continued)

FOREIGN PATENT DOCUMENTS

GB	6119993	*	2/2021
GB	6123230	*	3/2021

(Continued)

OTHER PUBLICATIONS

Pipishell, announced on May 31, 2019 [online], retrieved on Jul. 20, 2022, retrieved from internet, https://www.amazon.com/Articulating-Extension-Rotation-200x200mm-Pipishell/dp/B07SHFPD8S (Year: 2019).*

(Continued)

Primary Examiner — Messina L Smith
Assistant Examiner — Noah Perez

(57) **CLAIM**

The ornamental design for a display mount, as shown and described.

DESCRIPTION

FIG. **1** is a perspective view of a display mount showing my new design;
FIG. **2** is another perspective view thereof;
FIG. **3** is a front elevational view thereof;
FIG. **4** is a rear elevational view thereof;
FIG. **5** is a left side elevational view thereof;
FIG. **6** is a right side elevational view thereof;
FIG. **7** is a top plan view thereof;
FIG. **8** is a bottom plan view thereof; and,
FIG. **9** is an exploded perspective view of the display mount.
The broken lines in the drawings depict portions of the display mount that form no part of the claimed design.

1 Claim, 9 Drawing Sheets

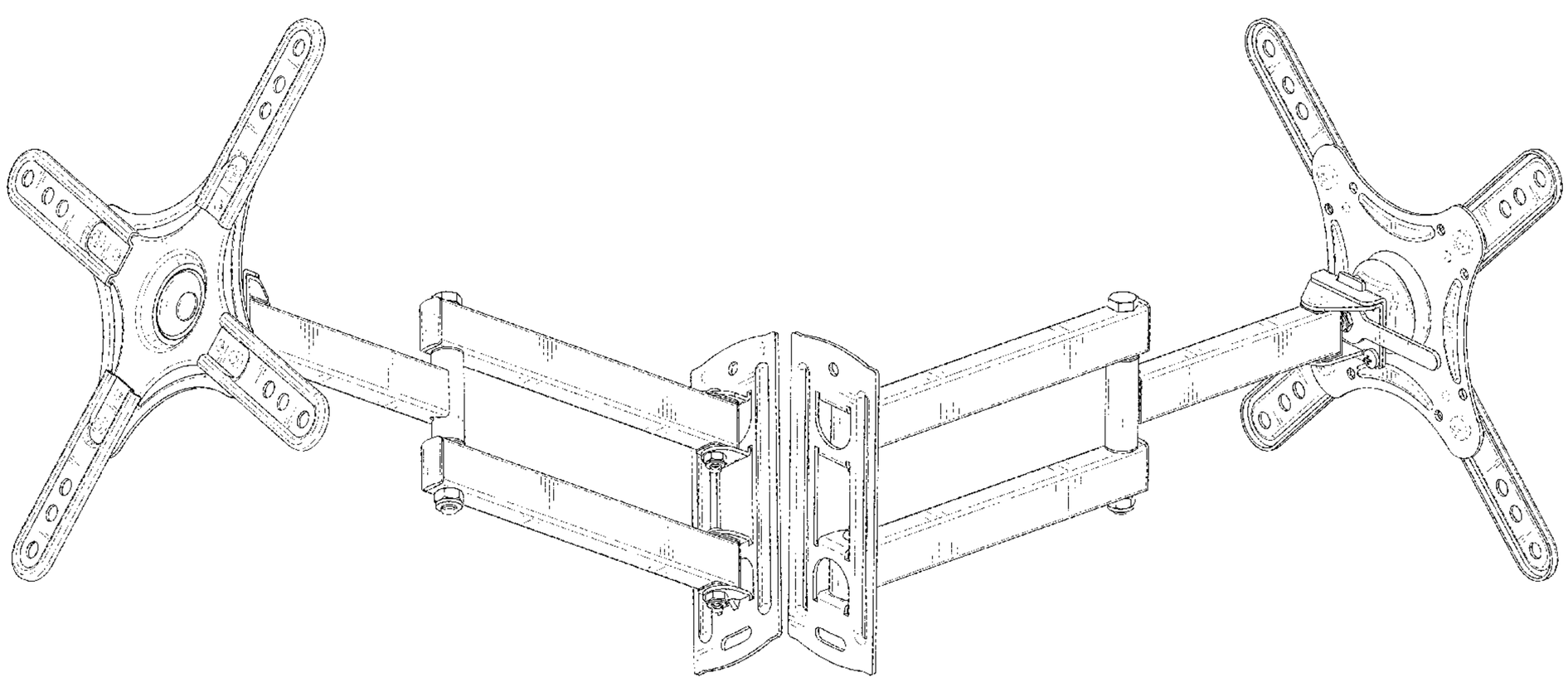

(56) **References Cited**

U.S. PATENT DOCUMENTS

D930,006	S	*	9/2021	Pei	D14/452
D932,499	S	*	10/2021	Lu	D14/452
D936,045	S	*	11/2021	Xie	D14/239
D950,530	S	*	5/2022	Bohnen	D14/239
D950,533	S	*	5/2022	Jia	D14/239
D953,313	S	*	5/2022	Pei	D14/239
2012/0187264	A1	*	7/2012	Vlies	F16M 11/10 248/220.1
2016/0353885	A1	*	12/2016	Feldman	F16M 11/10
2018/0177299	A1	*	6/2018	Pei	F16M 11/2014
2019/0191879	A1	*	6/2019	Pei	F16M 11/2092
2019/0245259	A1	*	8/2019	Barkan	A47B 97/001

FOREIGN PATENT DOCUMENTS

GB	6123232	*	3/2021
GB	6123233	*	3/2021
GB	6123236	*	3/2021
GB	6123237	*	3/2021

OTHER PUBLICATIONS

Transform Partners LLC, announced on Feb. 7, 2010 [online], retrieved on Jul. 20, 2022, retrieved from internet, https://www.amazon.com/Mount-Bracket-Computer-Monitor-Tilting/dp/B00CMVE2AO (Year: 2010).*

StarTech, no announcement date, retrieved on Jul. 20, 2022, retrieved from internet, https://www.insight.com/en_US/shop/product/FPWARTB1M/STARTECH.COM/FPWARTB1M/StarTech-com-Full-Motion-TV-Wall-Mount---Articulating-Arm---Supports-32--to-55--TVs-Displays---Flat-Screen-TV-Wall-Mount---Wall-Mount-TV-Bracket--Steel-FP.*

Alibaba, announced on Oct. 3, 2017 [online], retrieved on Jul. 20, 2022, retrieved from internet, https://www.alibaba.com/photo-detail/Full-Motion-TV-Wall-Mount-Bracket_60647911611.html (Year: 2017).*

Displays2Go, Earliest Review on Nov. 25, 2015 [online],retrieved on Jul. 20, 2022, retrieved online, https://www.displays2go.com/Review/View/13311/1/20?Value=13311 (Year: 2015).*

* cited by examiner

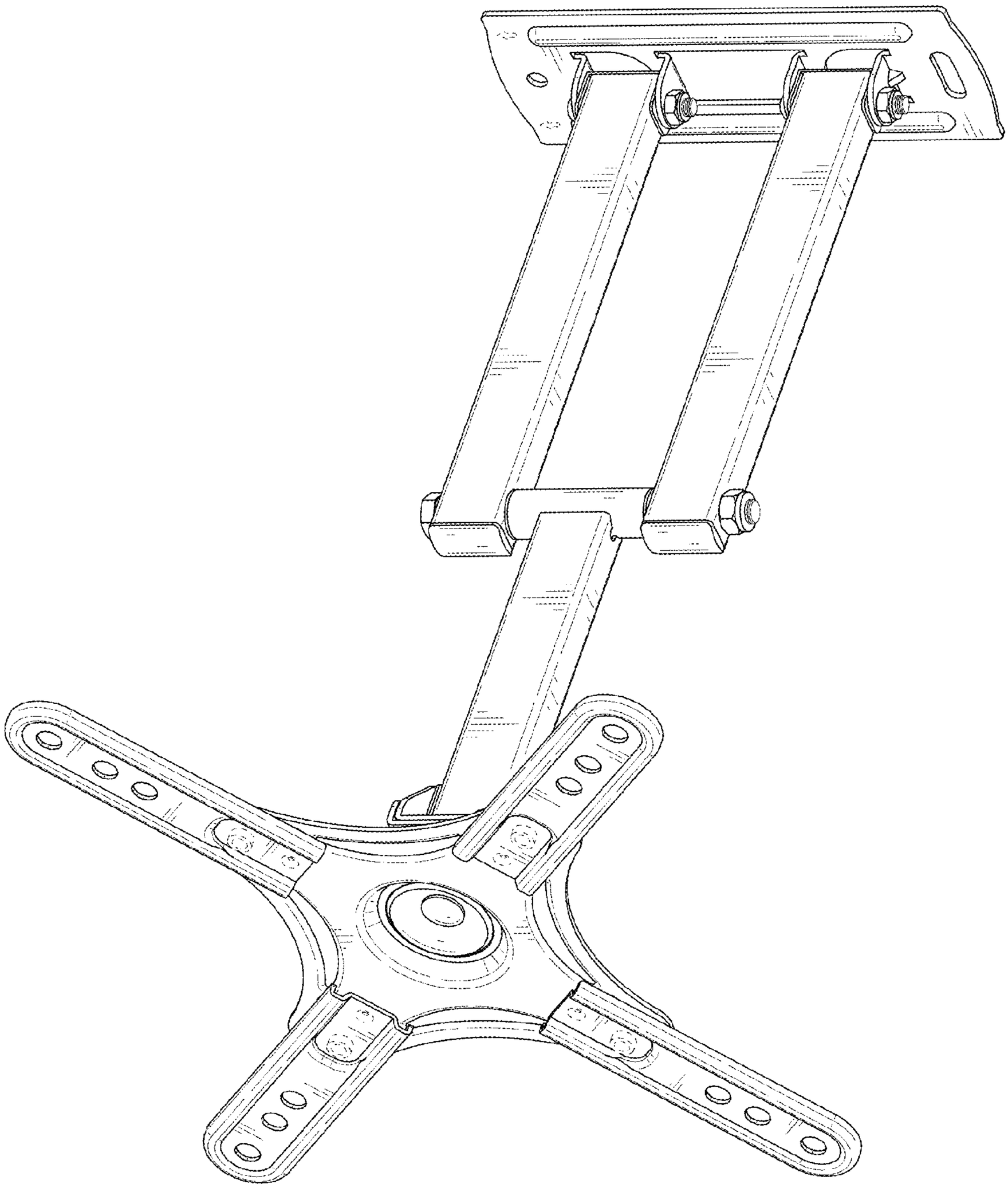

FIG. 1

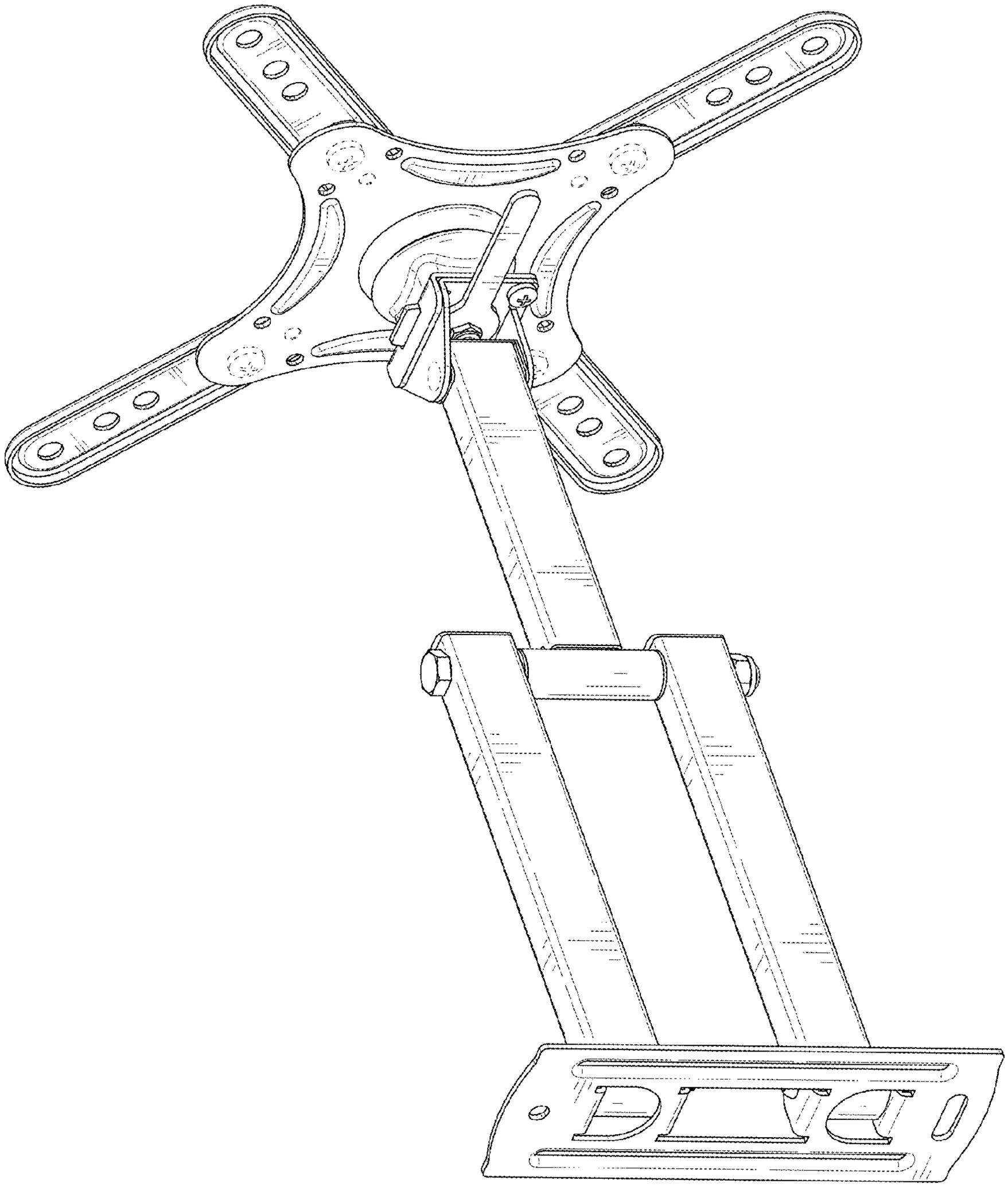

FIG. 2

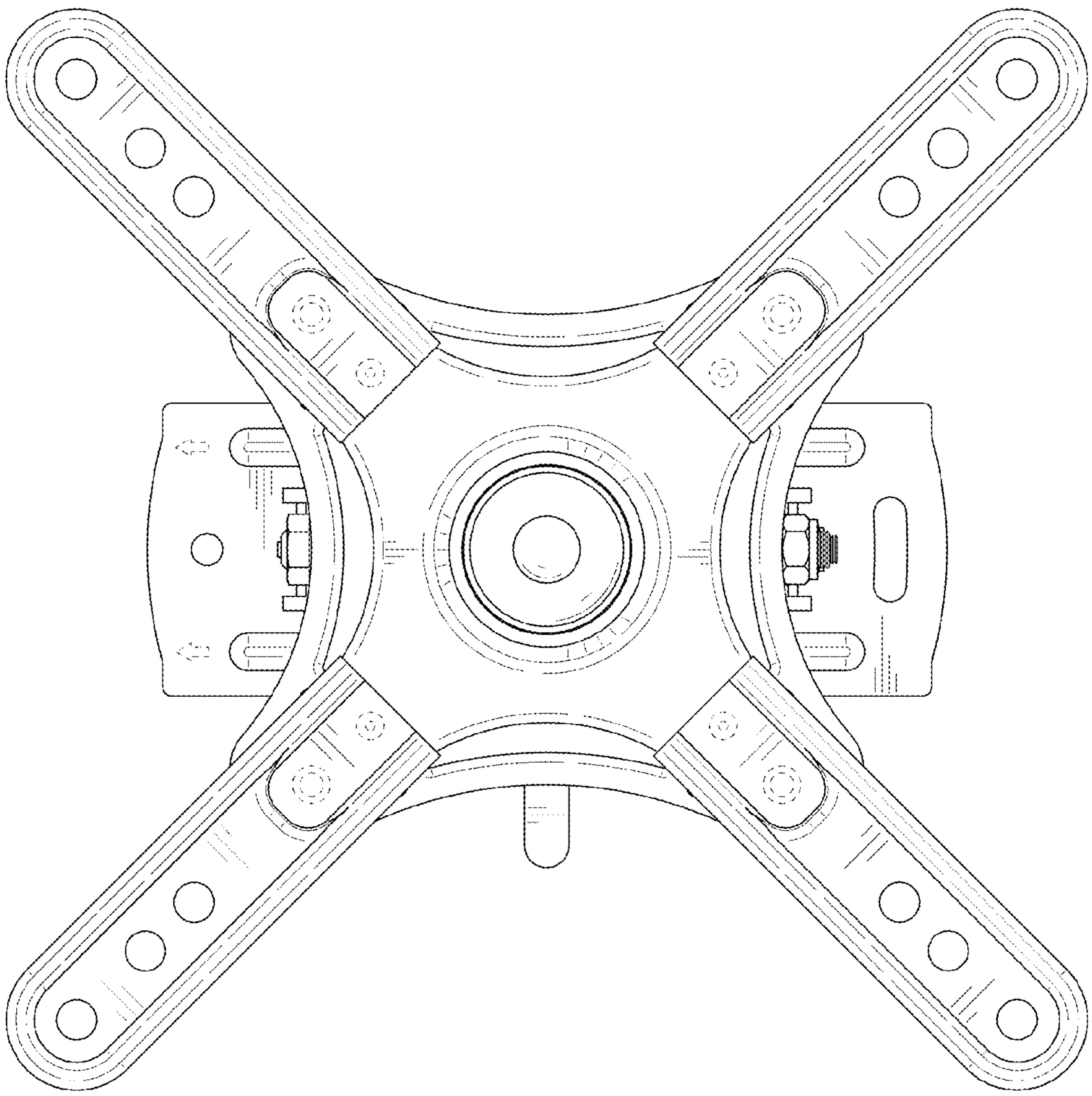

FIG. 3

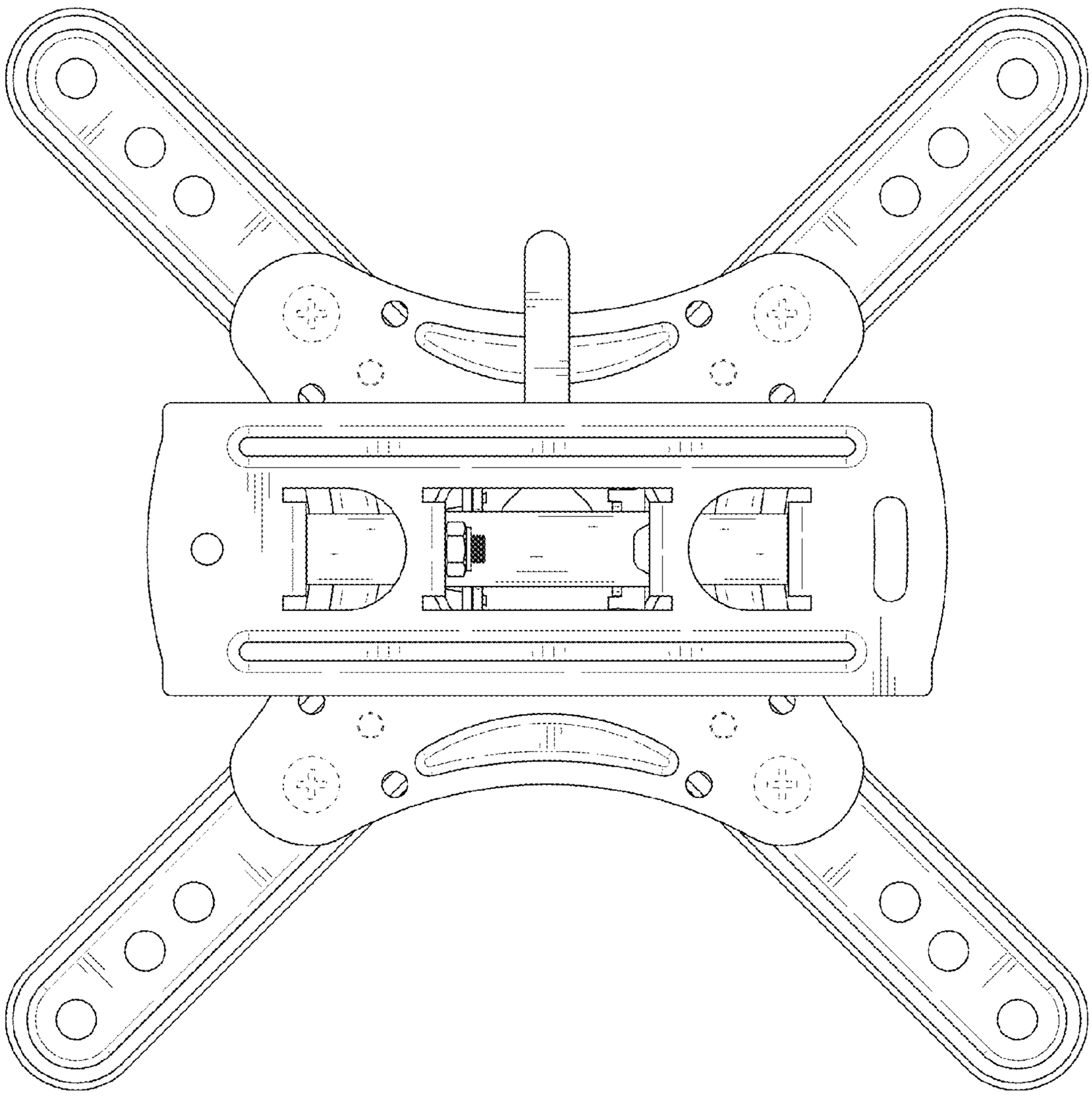

FIG. 4

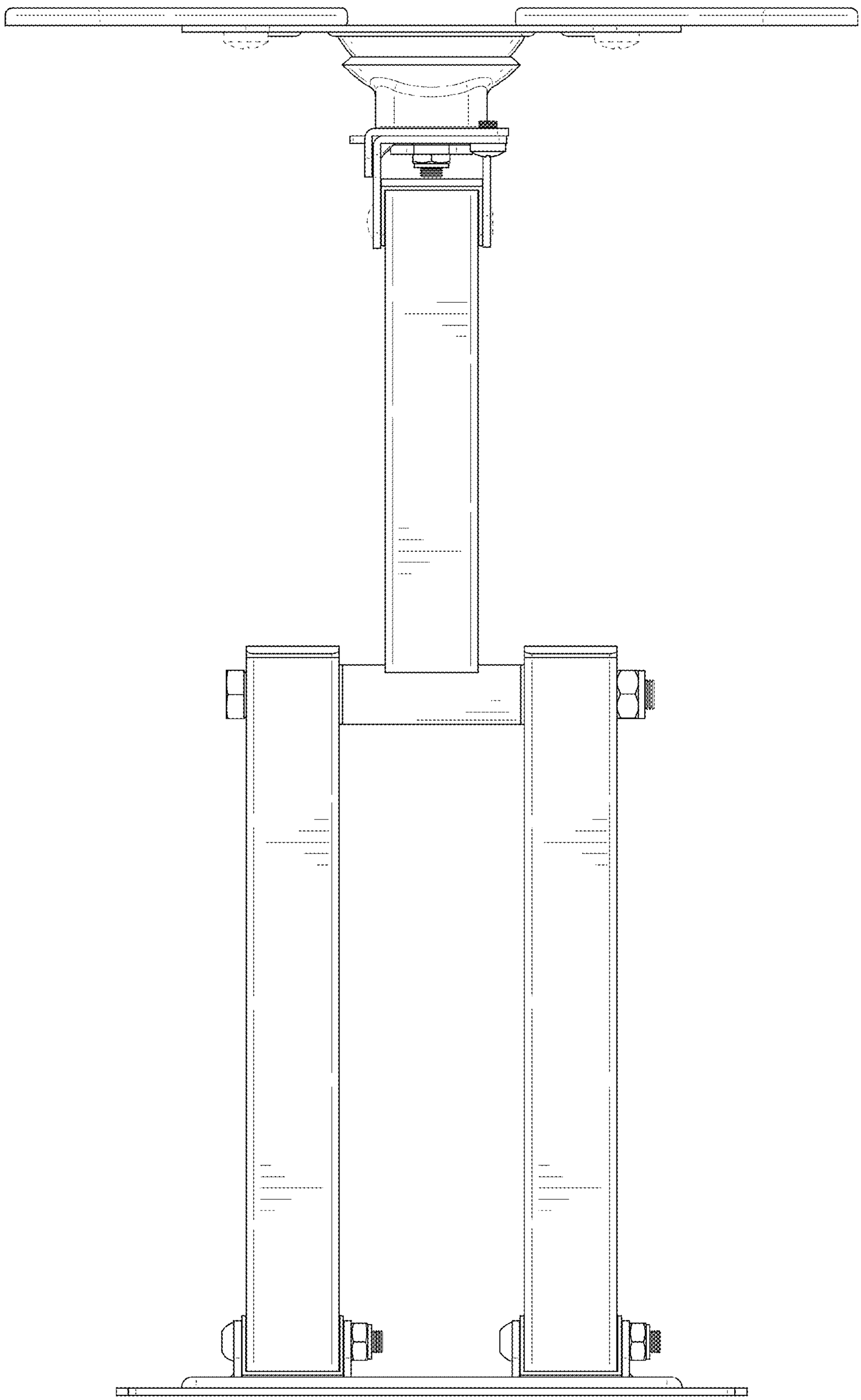

FIG. 5

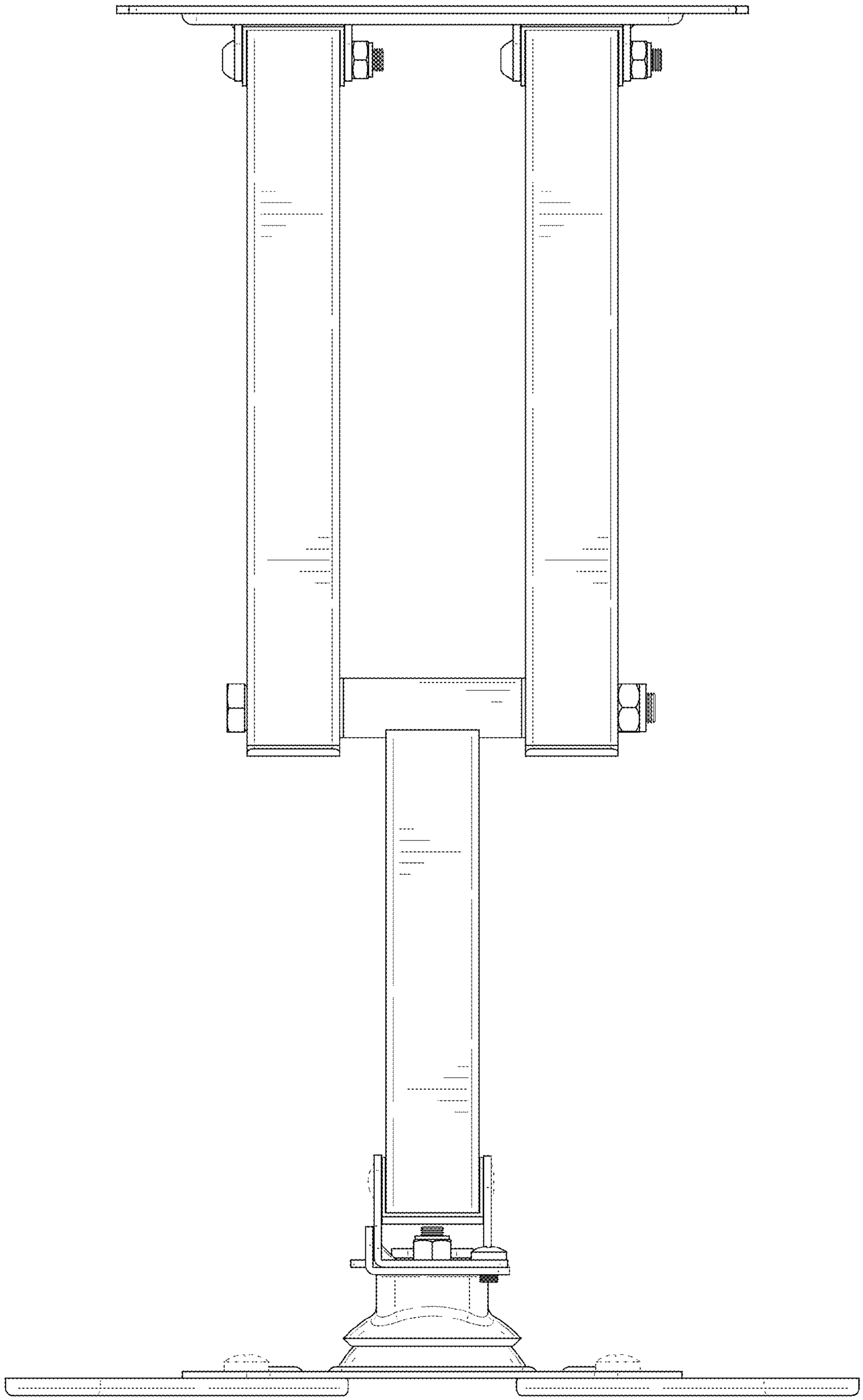

FIG. 6

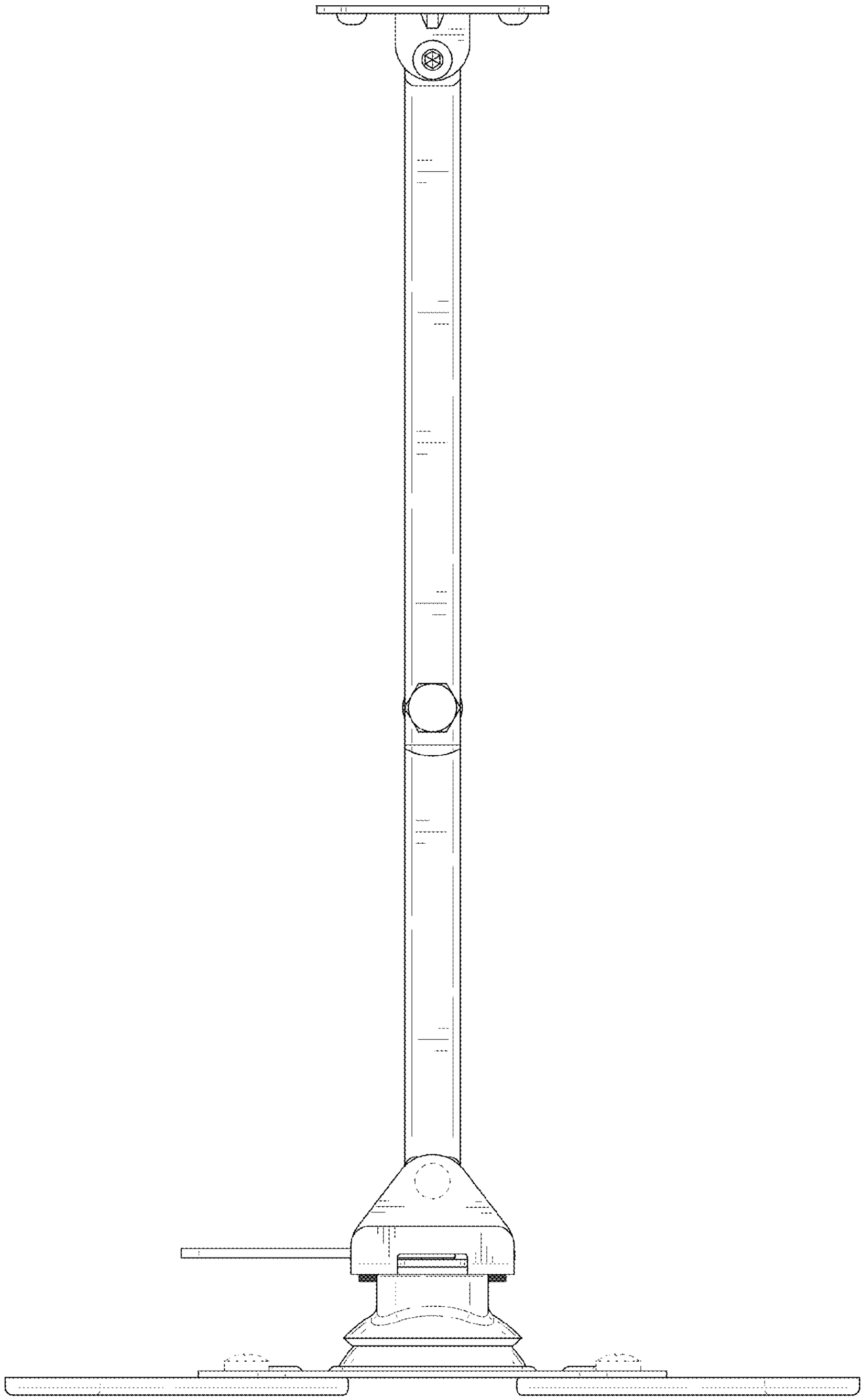

FIG. 7

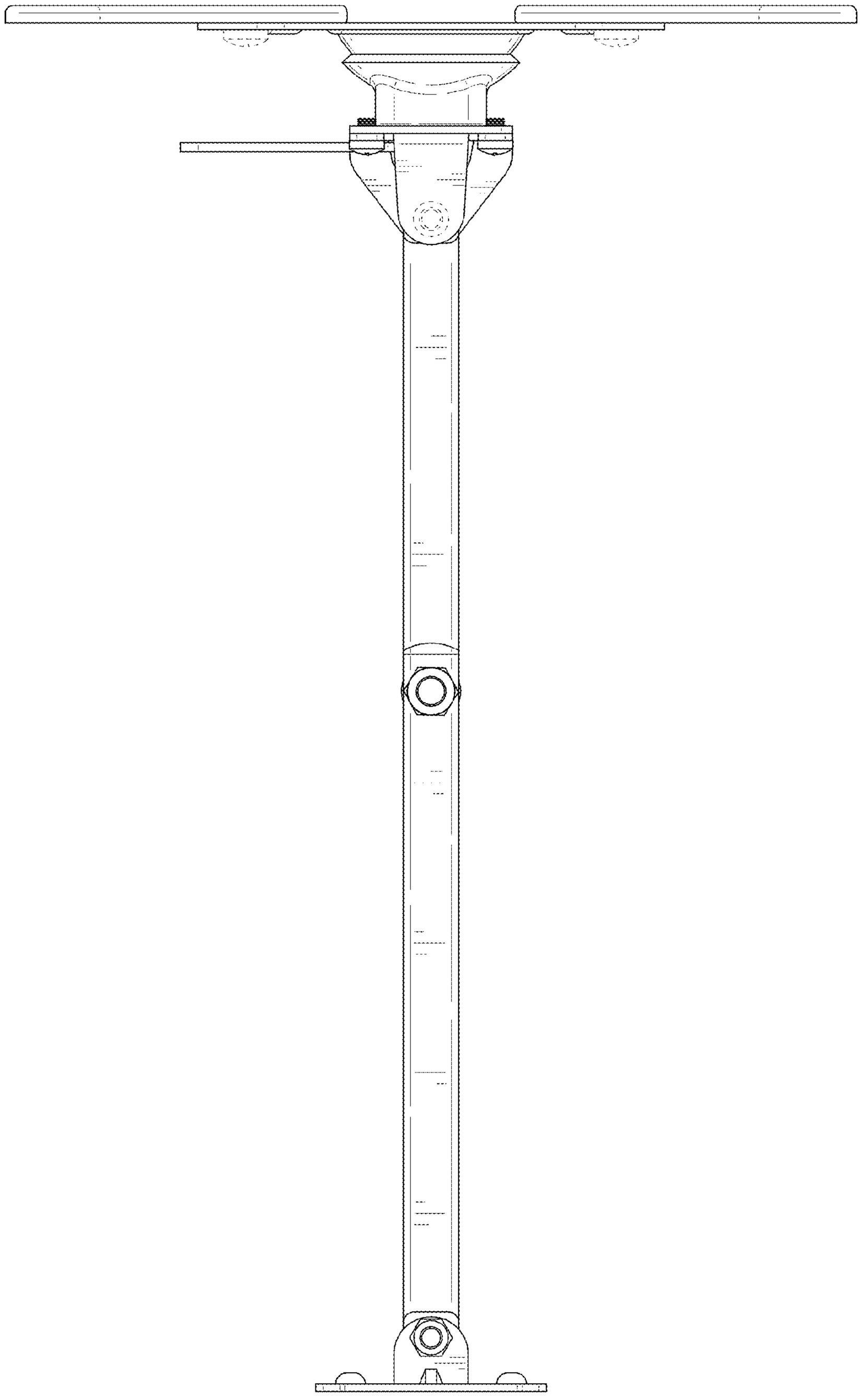

FIG. 8

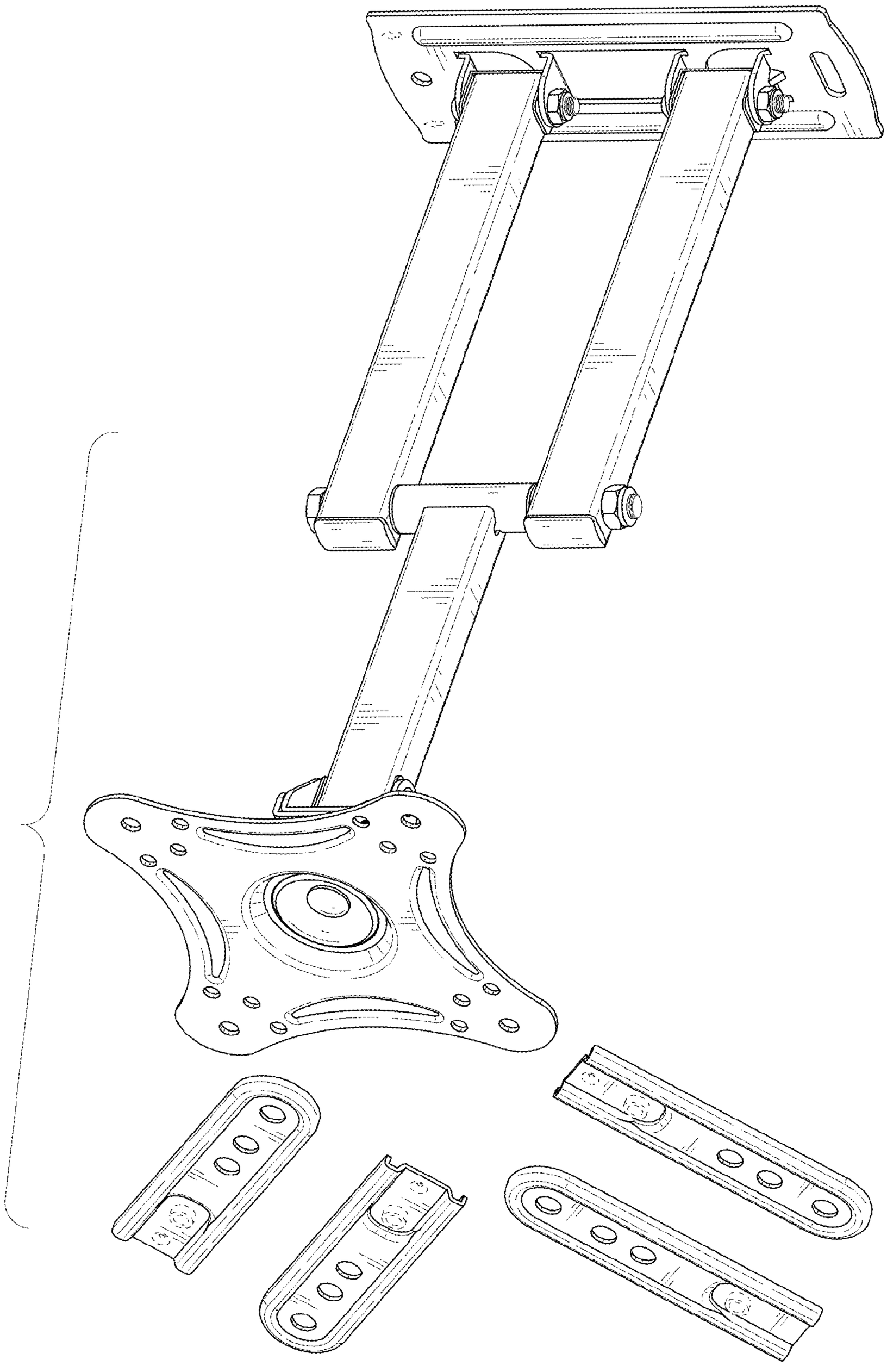

FIG. 9