US00D963957S

(12) United States Design Patent

Yang

(10) Patent No.: US D963,957 S
(45) Date of Patent: ** Sep. 13, 2022

(54) **PET FEEDER**

(71) Applicant: **SHENZHEN CHANGKUN TECHNOLOGY CO., LTD.**, Shenzhen (CN)

(72) Inventor: **Changmou Yang**, Wuhan (CN)

(73) Assignee: **SHENZHEN CHANGKUN TECHNOLOGY CO.. LTD.**, Shenzhen (CN)

(**) Term: **15 Years**

(21) Appl. No.: **29/828,973**

(22) Filed: **Mar. 2, 2022**

(51) **LOC (13) Cl.** **30-07**

(52) **U.S. Cl.**
USPC **D30/122**

(58) **Field of Classification Search**
USPC D30/110, 114, 115, 116, 121, 122, 124, D30/125, 127, 128, 129, 130, 131, 132, D30/133; D7/566, 587; D21/340
CPC A01K 5/0114; A01K 5/0121; A01K 5/02; A01K 5/0291; A01K 5/025; A01K 5/0266; A01K 5/0275; A01K 5/0283; A01K 5/0258; A01K 5/0142; A01K 5/0233; A01K 29/00; A01K 7/00; G01F 11/24; G01F 23/02; B67D 1/0425; B67D 1/04; B67D 1/00; B67D 1/02; B67D 1/0871; B67D 1/0802; A47J 41/0033; A47J 41/005; A47J 41/0088; A47J 41/0094; A47J 41/04; A47J 41/053; B05B 11/00; B05B 11/0002; B05B 11/0005; B05B 11/001; C02F 1/003; C02F 1/283; C02F 2307/02
See application file for complete search history.

(56) **References Cited**

U.S. PATENT DOCUMENTS

D870,398 S 12/2019 Veness
D885,686 S 5/2020 Chen et al.
D939,784 S * 12/2021 Ren D30/122
2013/0333622 A1* 12/2013 Jin A01K 5/0291 119/51.01
2016/0007564 A1* 1/2016 Ma A01K 5/0291 119/57.1

OTHER PUBLICATIONS

WellToBe Automatic Cat Feeder. WellToBe, amazon.com (online) 13 pages. Posted Jul. 22, 2021. [Retrieved Jul. 25, 2022] https://www.amazon.com/dp/B099RYV9KT/ref=cm_sw_em_r_mt_dp_ZKZ69BYF2VYW933HXD83?_encoding=UTF8&psc=1 (Year: 2021).*

(Continued)

Primary Examiner — Kathleen L Jones
Assistant Examiner — Cole Sanders Holman

(57) **CLAIM**

The ornamental design for a pet feeder, as shown and described.

DESCRIPTION

FIG. **1** is a perspective view of a pet feeder showing my new design;
FIG. **2** is another perspective view thereof;
FIG. **3** is a front elevational view thereof;
FIG. **4** is a rear elevational view thereof;
FIG. **5** is a left side elevational view thereof;
FIG. **6** is a right side elevational view thereof;
FIG. **7** is a top plan view thereof;
FIG. **8** is a bottom plan view thereof; and,
FIG. **9** is an enlarged view of portion **9** shown in FIG. **1**.
The dash-dash broken lines in the drawings depict portions of the pet feeder that form no part of the claimed design. The dot-dash broken lines represent boundaries of the enlarged portion and form no part of the claimed design.

1 Claim, 9 Drawing Sheets

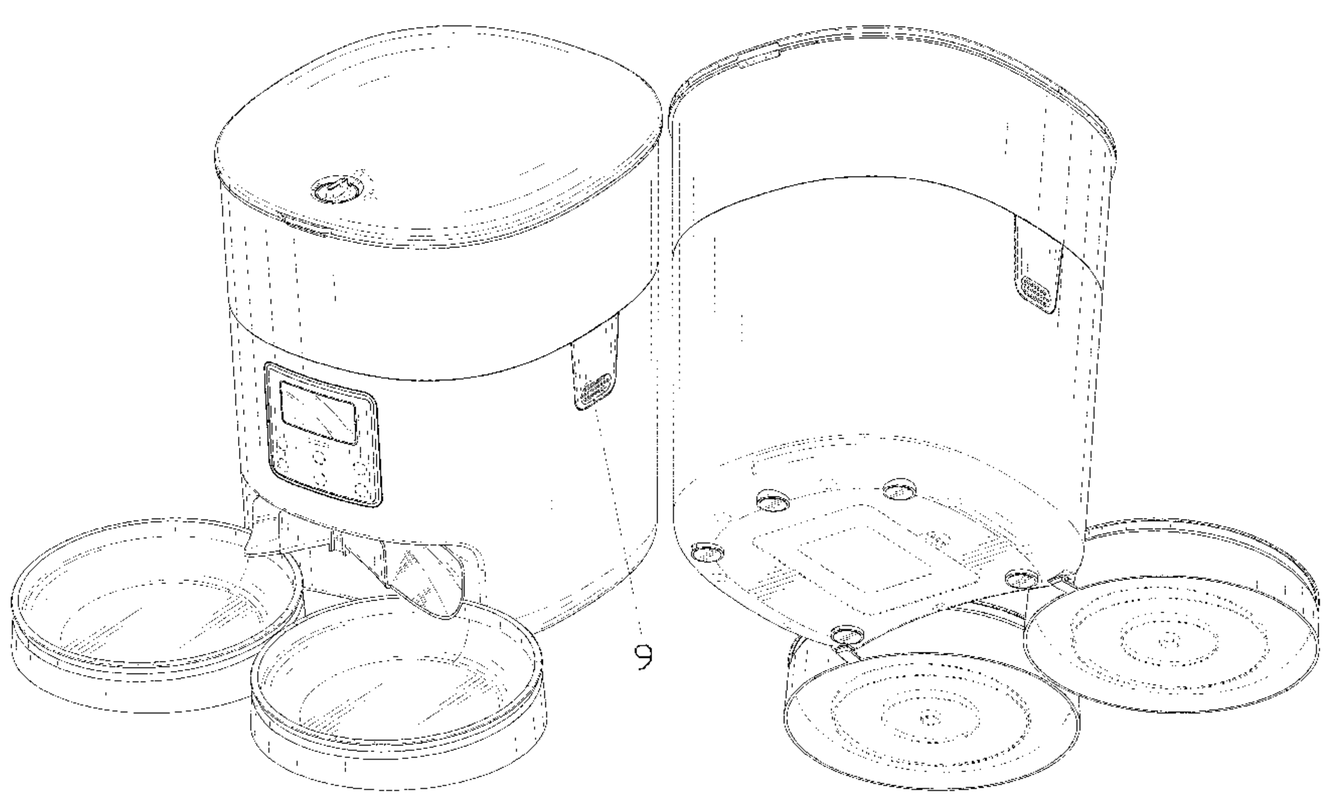

(56) **References Cited**

OTHER PUBLICATIONS

VOLUAS cat feeder. VOLUAS, amazon.com (online) 3 pages. Posted Nov. 9, 2021. [Retrieved Jul. 25, 2022] https://a.co/d/2S2VC9b (Year: 2021).*

Yang Changmou, CN Design No. 307331707 published at Orbit, publication date May 10, 2022. Site visited Jul. 25, 2022. Available from internet. (Year: 2022).*

* cited by examiner

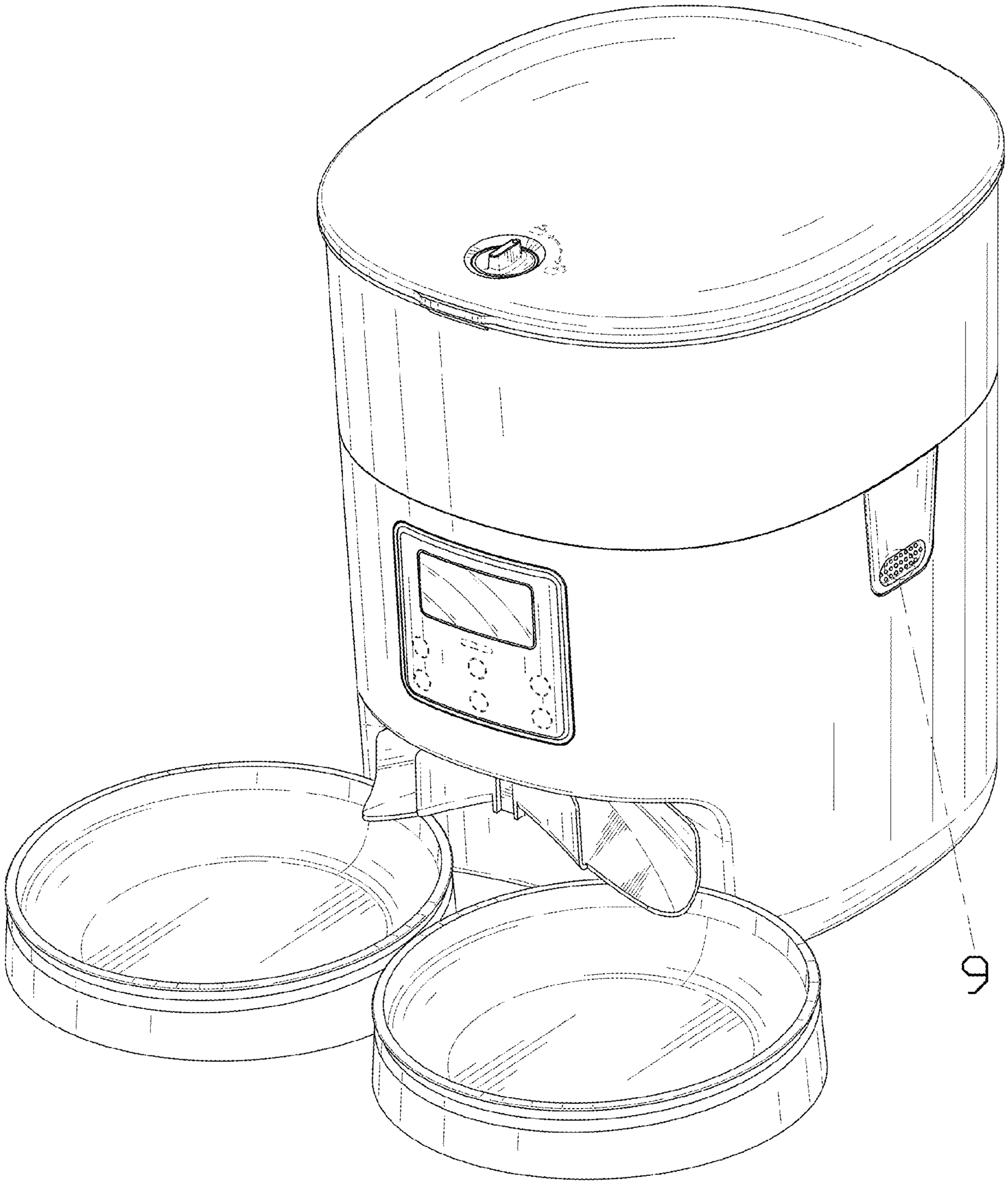

FIG. 1

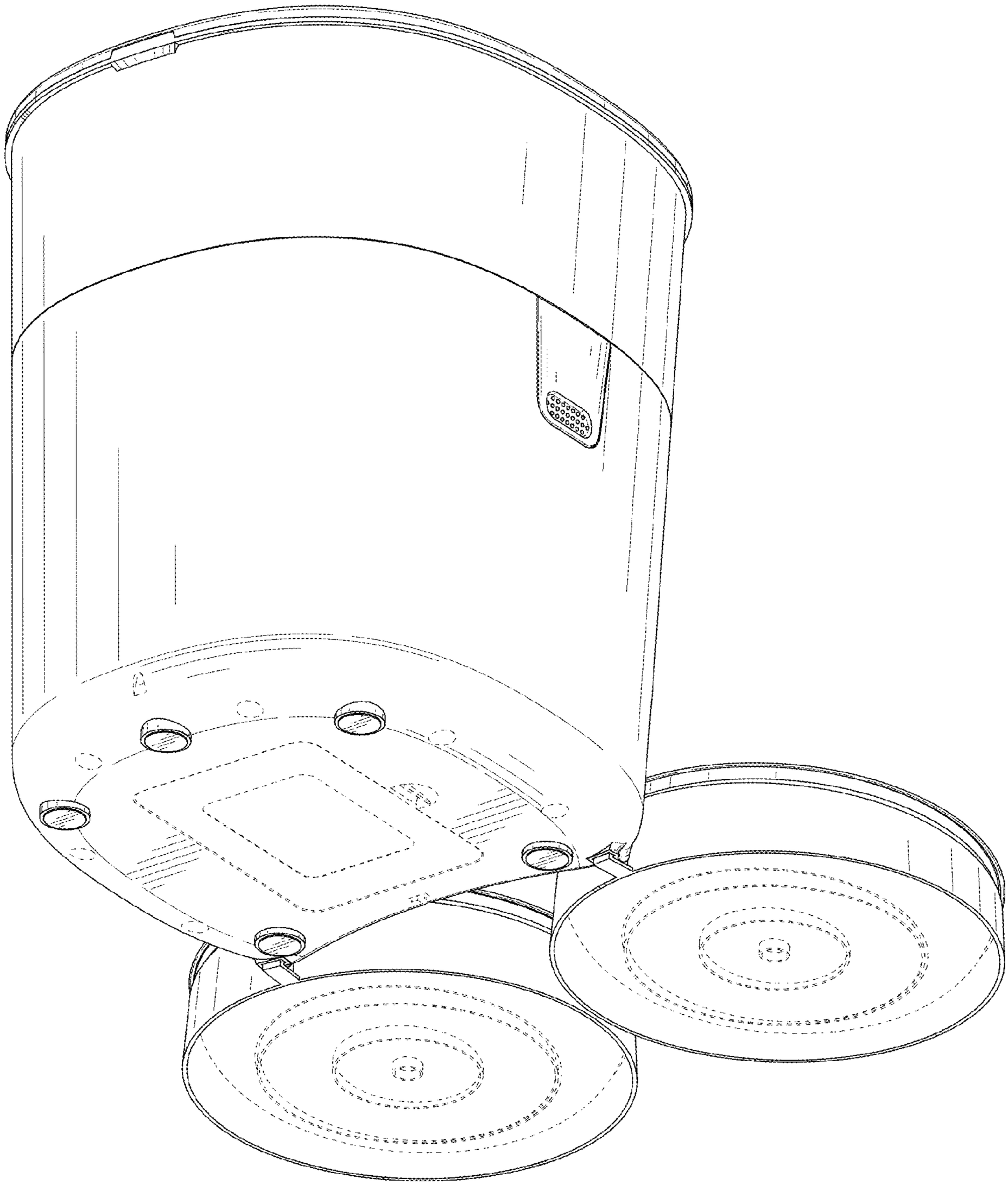

FIG. 2

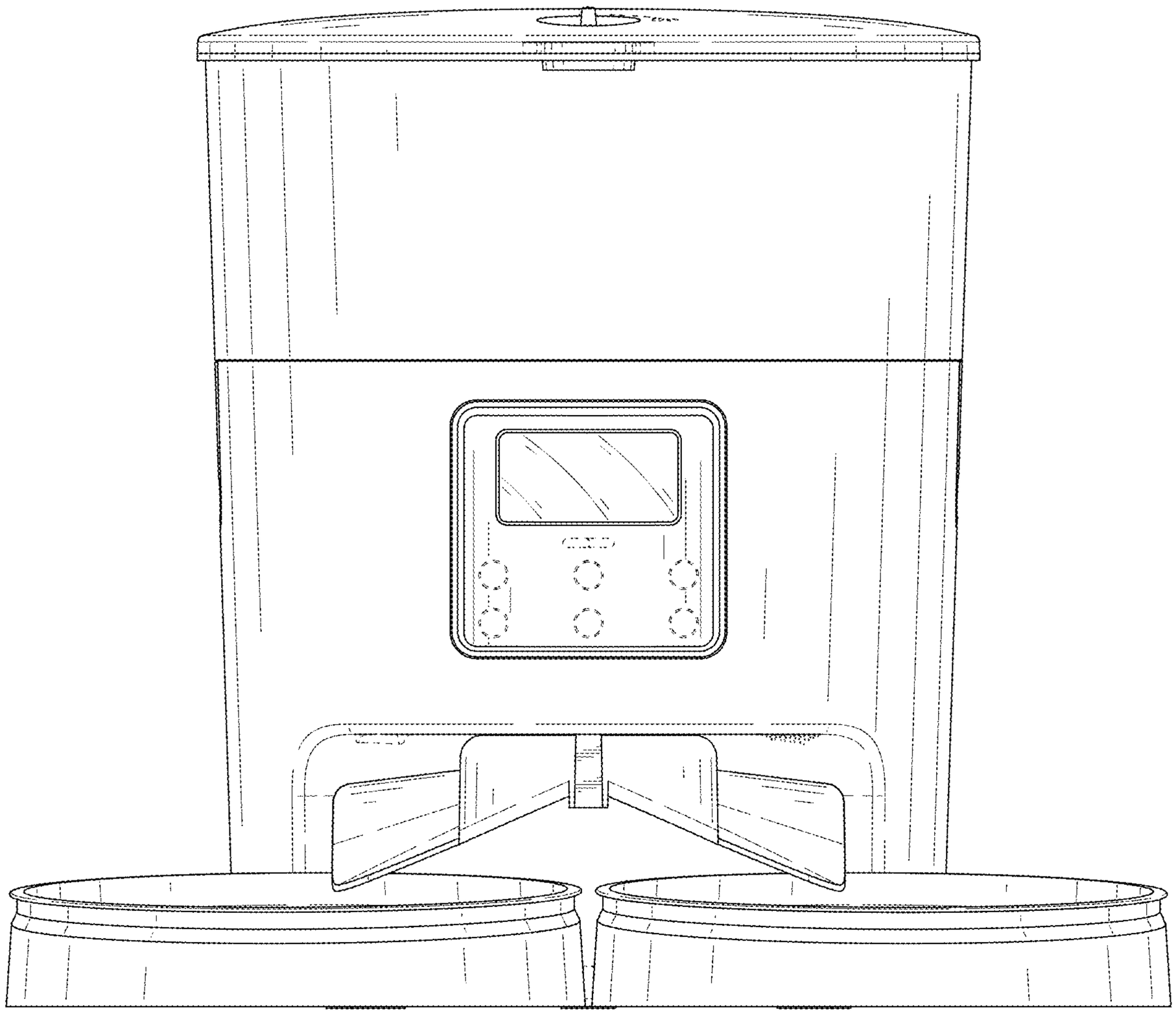

FIG. 3

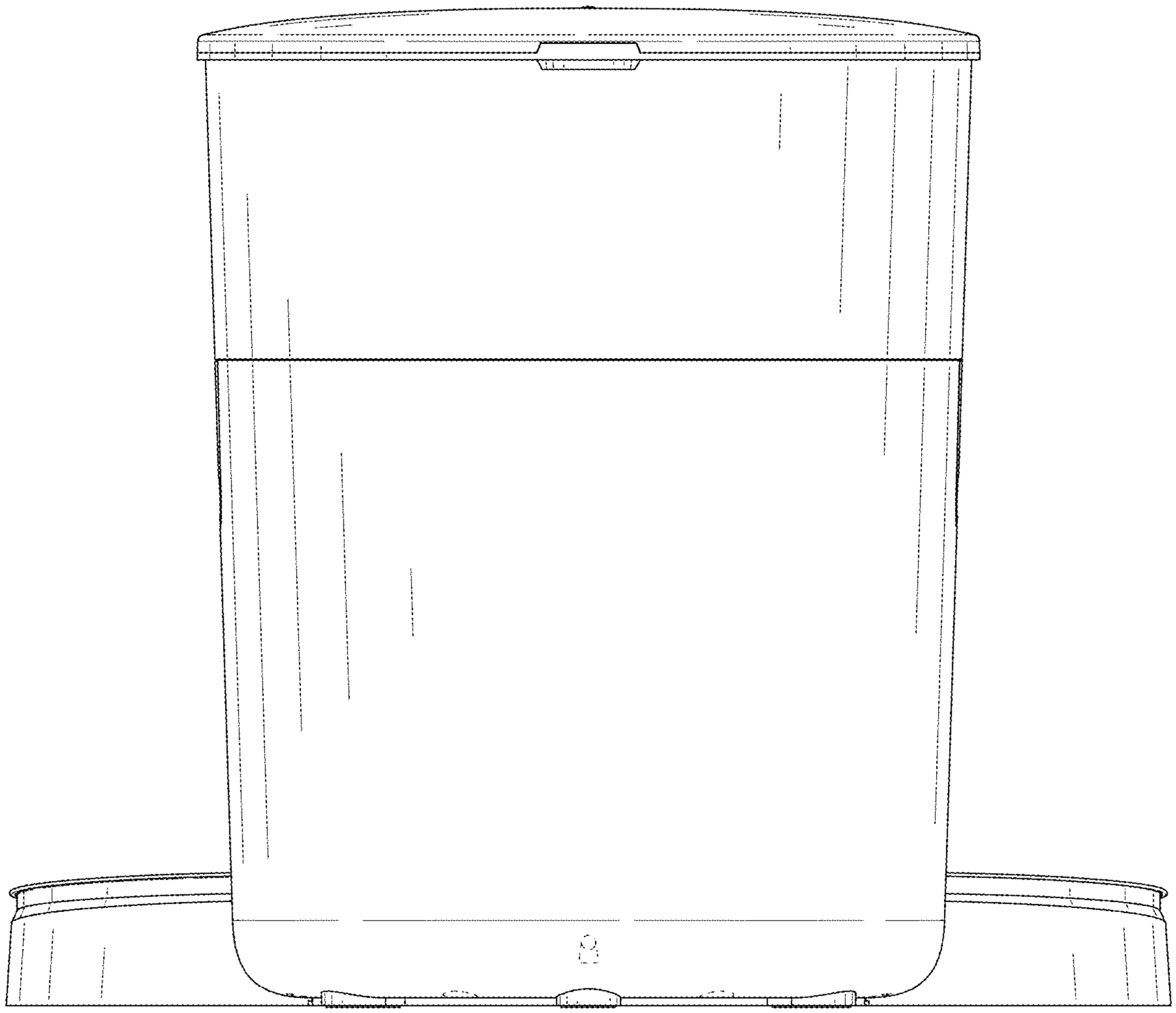

FIG. 4

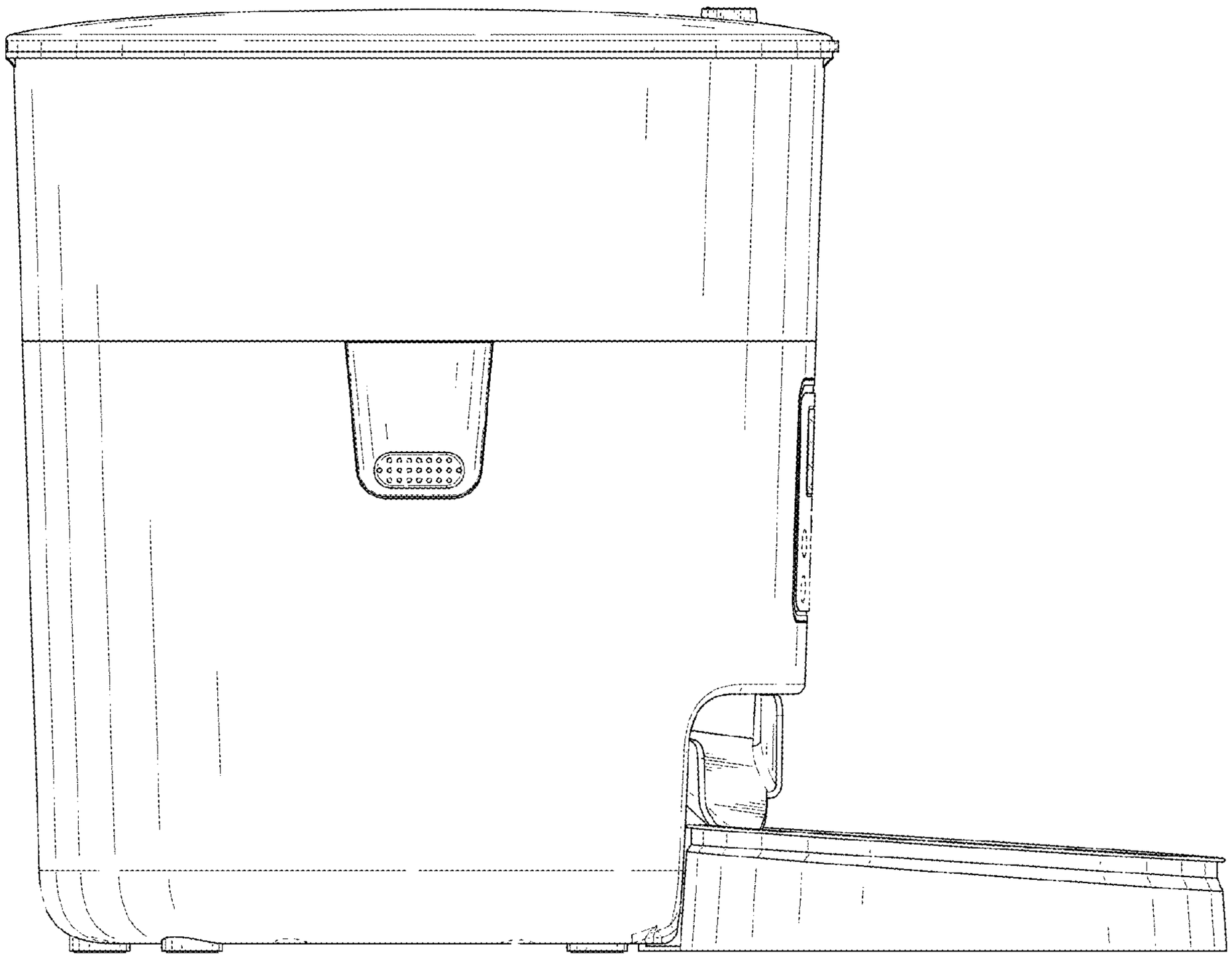

FIG. 5

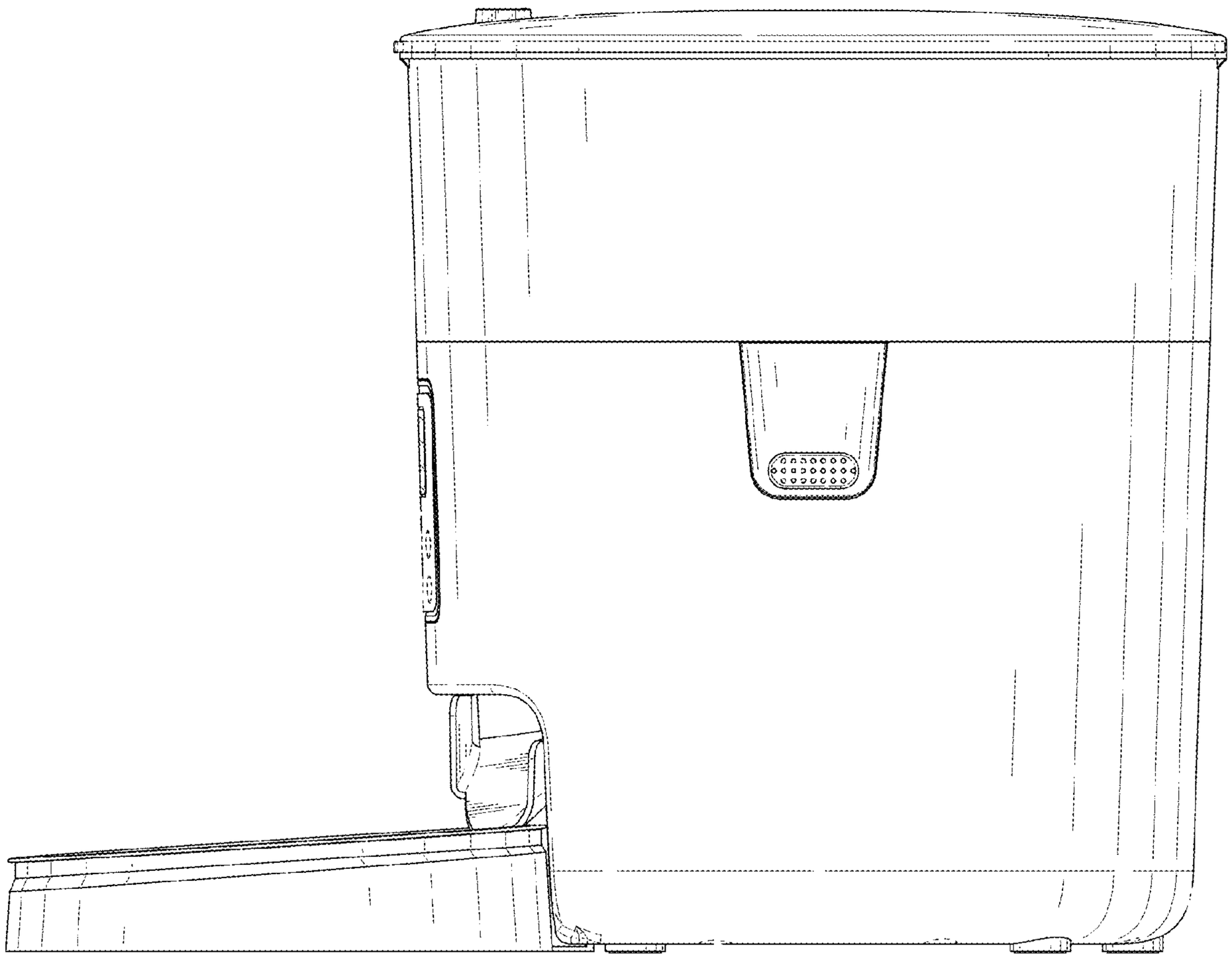

FIG. 6

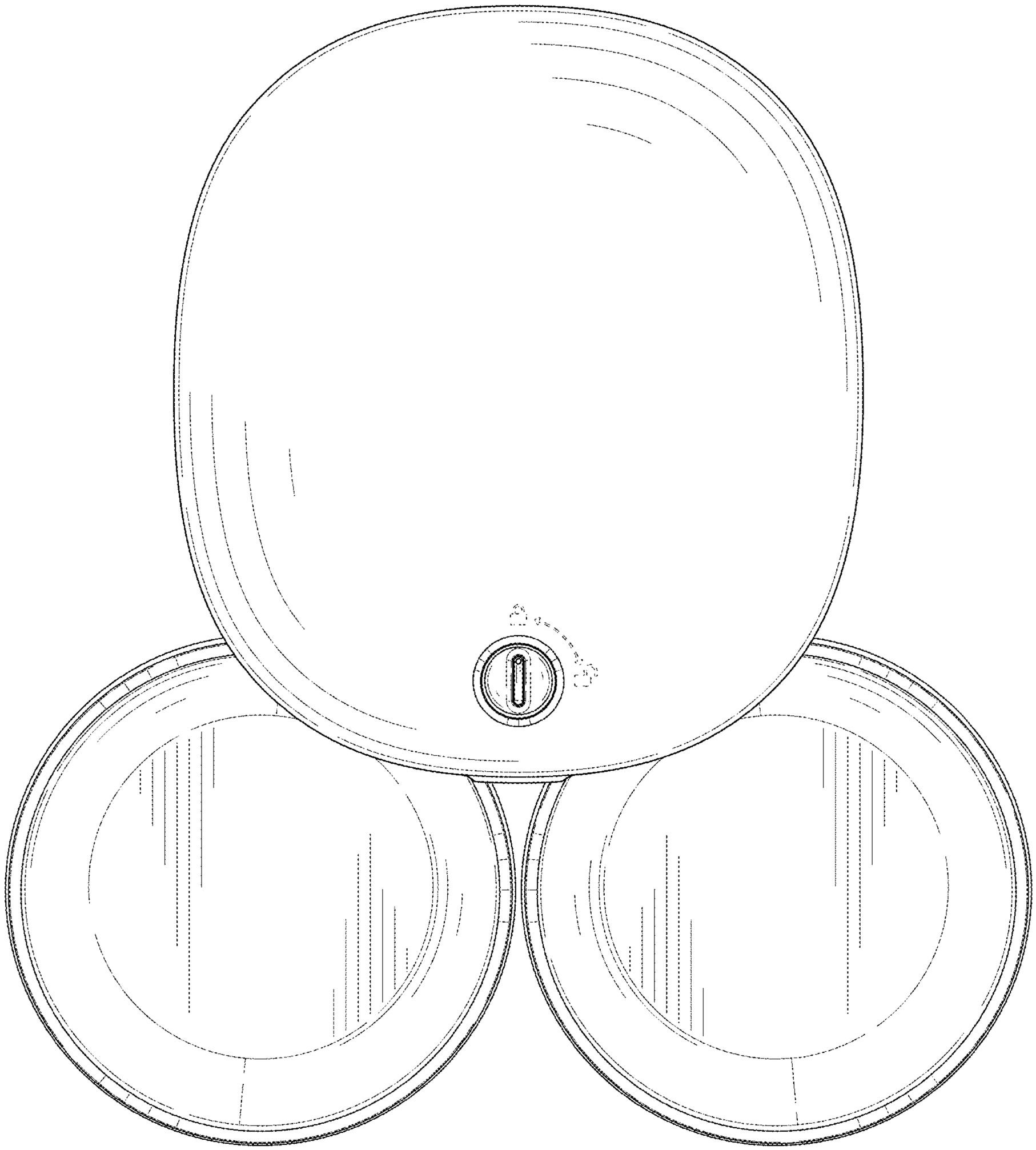

FIG. 7

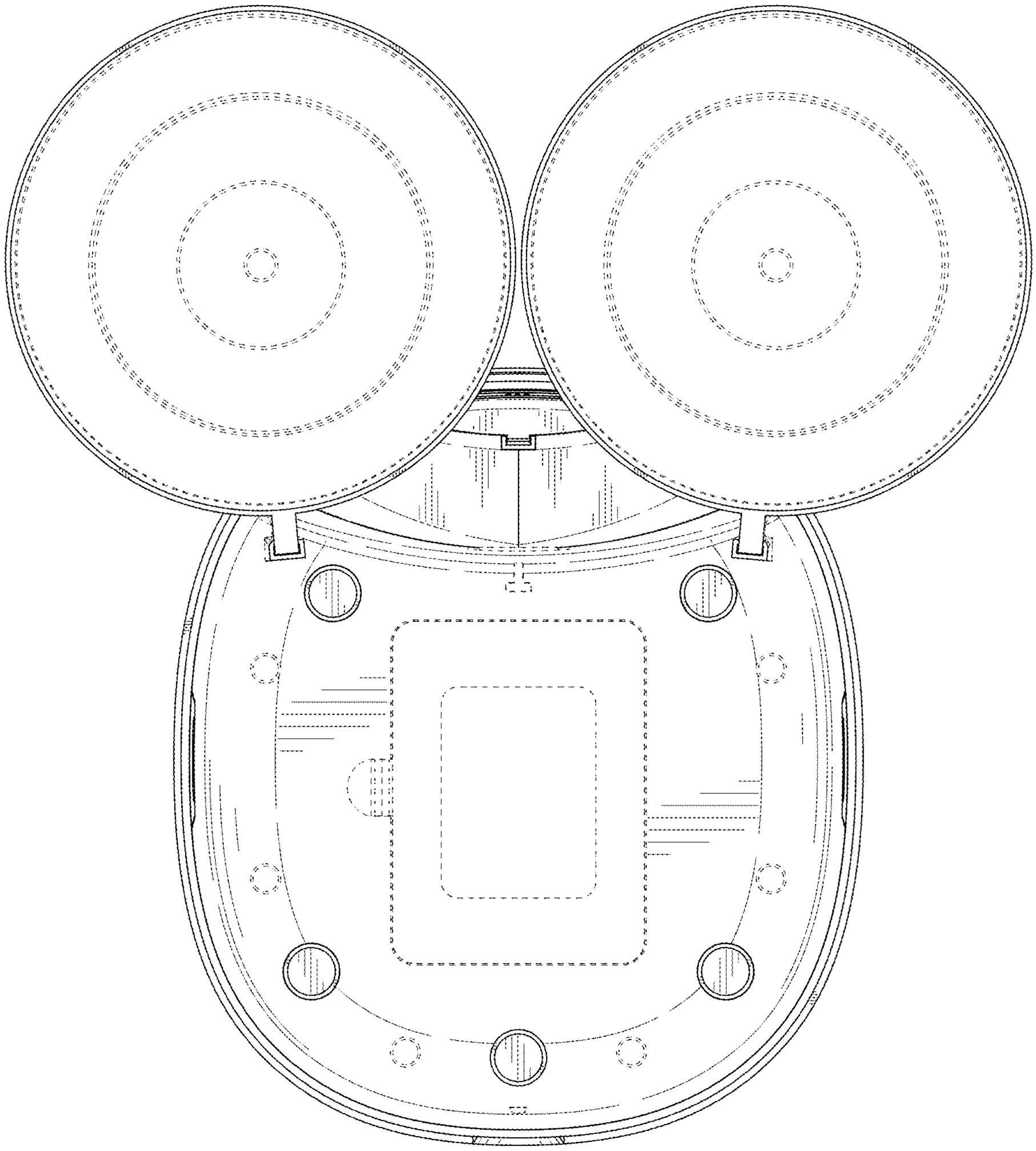

FIG. 8

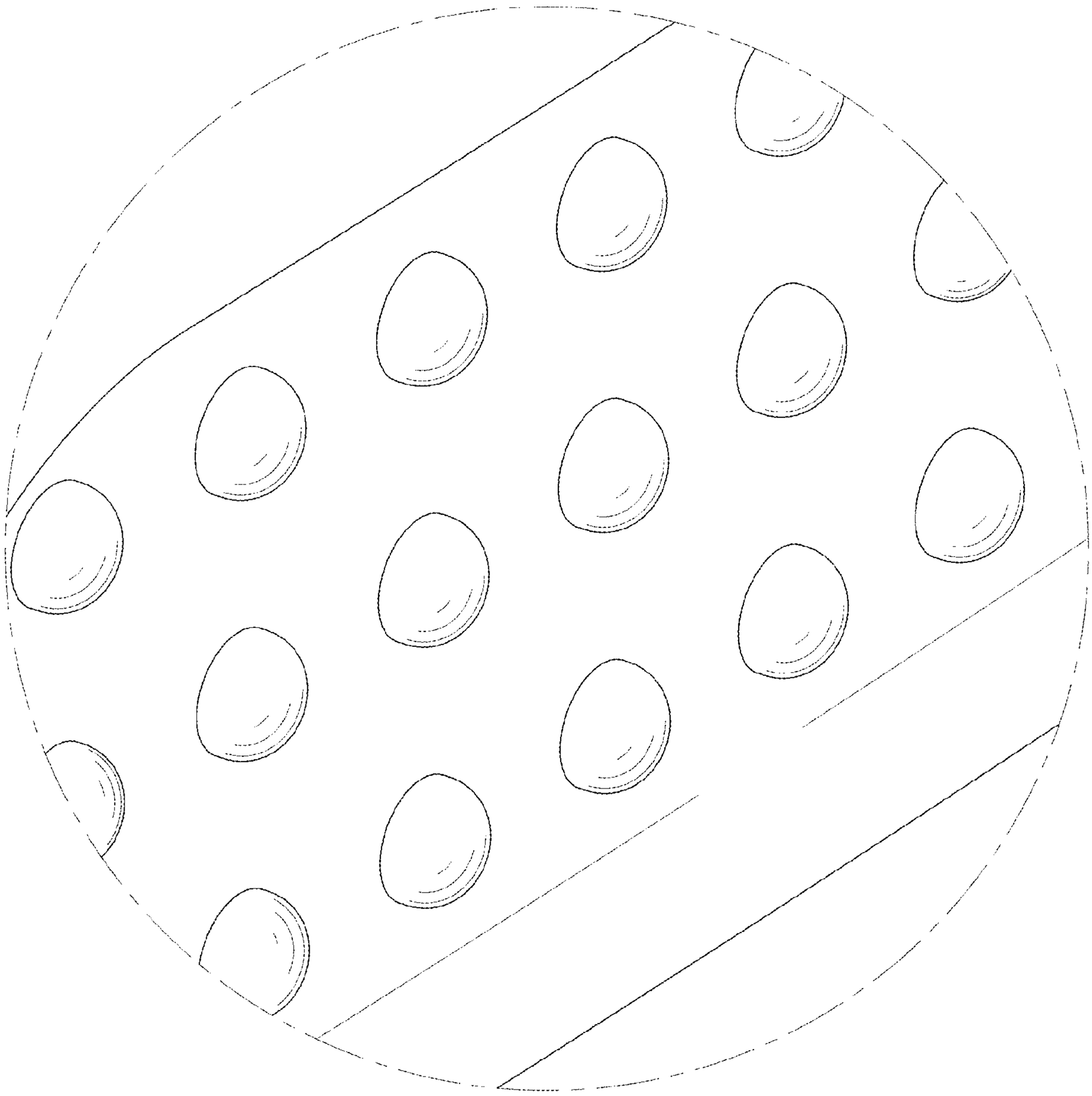

FIG. 9