US00D963744S

(12) United States Design Patent
Miyawaki

(10) Patent No.: US D963,744 S
(45) Date of Patent: ** Sep. 13, 2022

(54) **PRINTER**

(71) Applicant: **SEIKO INSTRUMENTS INC.**, Chiba (JP)

(72) Inventor: **Kohei Miyawaki**, Chiba (JP)

(73) Assignee: **SEIKO INSTRUMENTS, INC.**, Chiba (JP)

(**) Term: **15 Years**

(21) Appl. No.: **29/743,318**

(22) Filed: **Jul. 21, 2020**

(30) **Foreign Application Priority Data**

Jan. 21, 2020 (JP) ..... 2020000938 D

(51) **LOC (13) Cl.** **18-02**

(52) **U.S. Cl.**
USPC **D18/58**

(58) **Field of Classification Search**
USPC D14/300, 301, 302, 303, 307, 308, 314, D14/321, 365, 445, 446; D18/4.1, 4.4, D18/4.6, 34.1, 6, 7, 14, 19, 34.3, 34.7, D18/34.8, 34.9, 36, 37, 38, 39, 46, 47, D18/48, 49, 50, 53, 54, 55, 56
CPC H04N 1/00278; B26D 1/045; B26D 1/065; B41J 15/044; B41J 2/1752; B41J 29/02; G06F 3/02
See application file for complete search history.

(56) **References Cited**

U.S. PATENT DOCUMENTS

D585,483	S	*	1/2009	Sakabe	D18/43
D588,190	S	*	3/2009	Kamimura	D18/43
D596,663	S	*	7/2009	Kamimura	D18/43
D689,924	S	*	9/2013	Sakai	D18/14
D722,336	S	*	2/2015	Suzuki	D18/43
D729,311	S	*	5/2015	Campanini	D18/50
D765,164	S	*	8/2016	Park	D18/43
D779,589	S	*	2/2017	Moon	D18/56
D791,227	S	*	7/2017	Yokoyama	D18/43
D807,429	S	*	1/2018	Ando	D18/56
D823,383	S	*	7/2018	Miyauchi	D18/53
D823,384	S	*	7/2018	Miyauchi	D18/53

FOREIGN PATENT DOCUMENTS

CN 305947622 * 7/2020

OTHER PUBLICATIONS

LTP02-245 _ Seiko Instruments, p. 1, 2021 GmbH-29743318-https://www.seiko-instruments.de/products/thermal-printers/ltp02-245.html?cHash=7089e5e2d80257b46f5f81246223c869 (Year: 2021).*

* cited by examiner

Primary Examiner — Jennifer L Rempfer
Assistant Examiner — Danielle Nichole Bowly
(74) *Attorney, Agent, or Firm* — Brooks Kushman P.C.

(57) **CLAIM**

The ornamental design for a printer, as shown and described.

DESCRIPTION

FIG. **1** is a front, top and right-side perspective view of printer showing the new design;
FIG. **2** is a front, top and left-side perspective view thereof;
FIG. **3** is a front, bottom and right-side perspective view thereof;
FIG. **4** is a front, bottom and left-side perspective view thereof;
FIG. **5** is a front view thereof:
FIG. **6** is a rear view thereof;
FIG. **7** is a right-side view thereof;
FIG. **8** is a left-side view thereof;
FIG. **9** is a top view thereof; and,
FIG. **10** is a bottom view thereof.

1 Claim, 10 Drawing Sheets

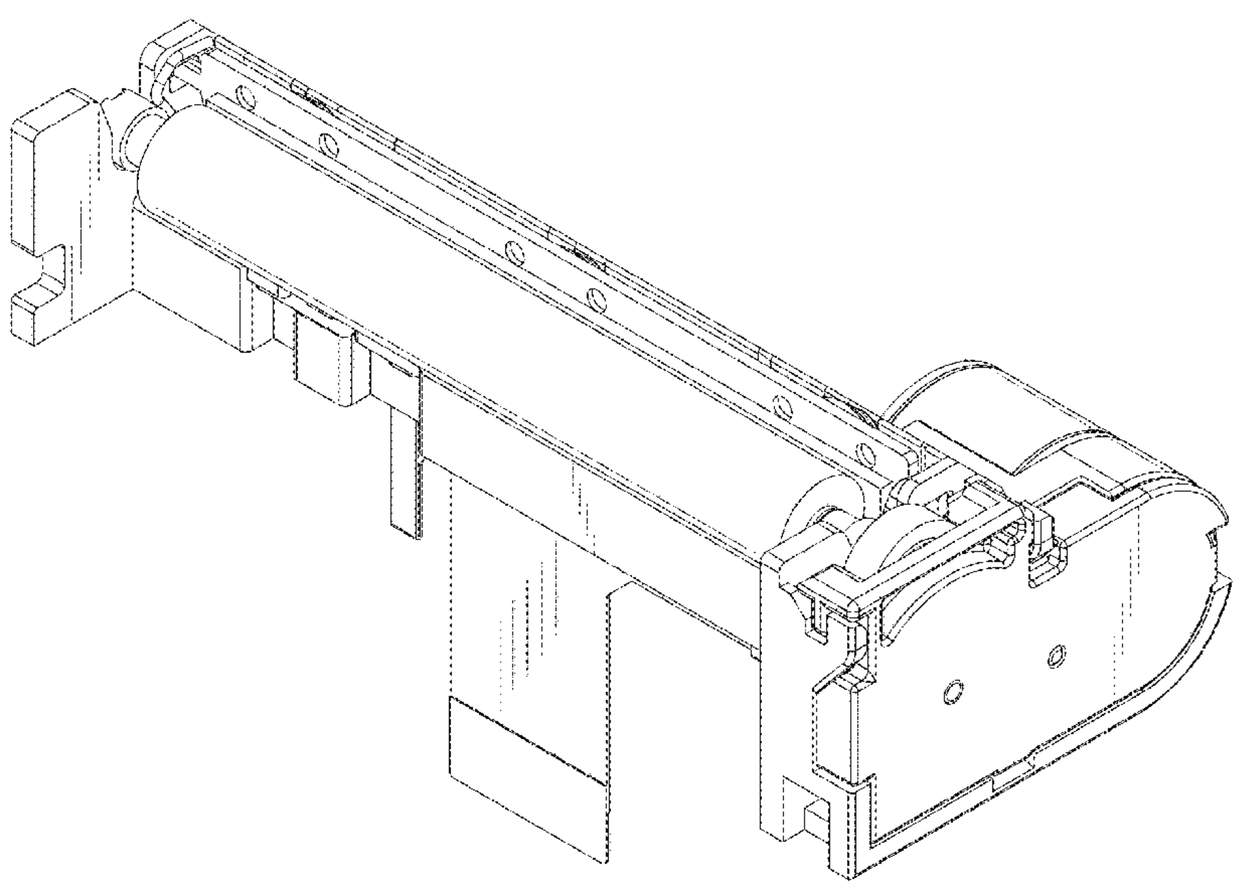

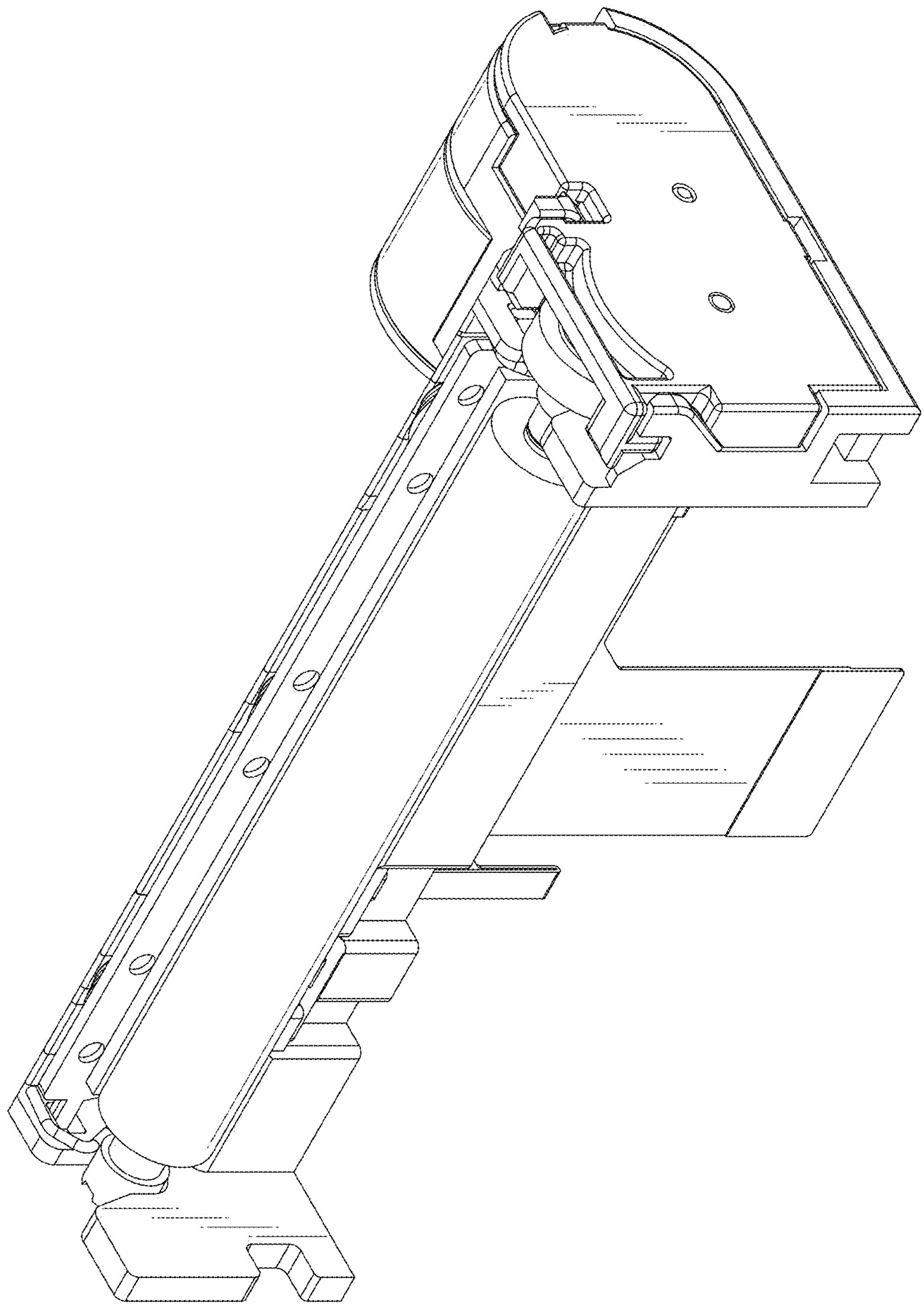

FIG.1

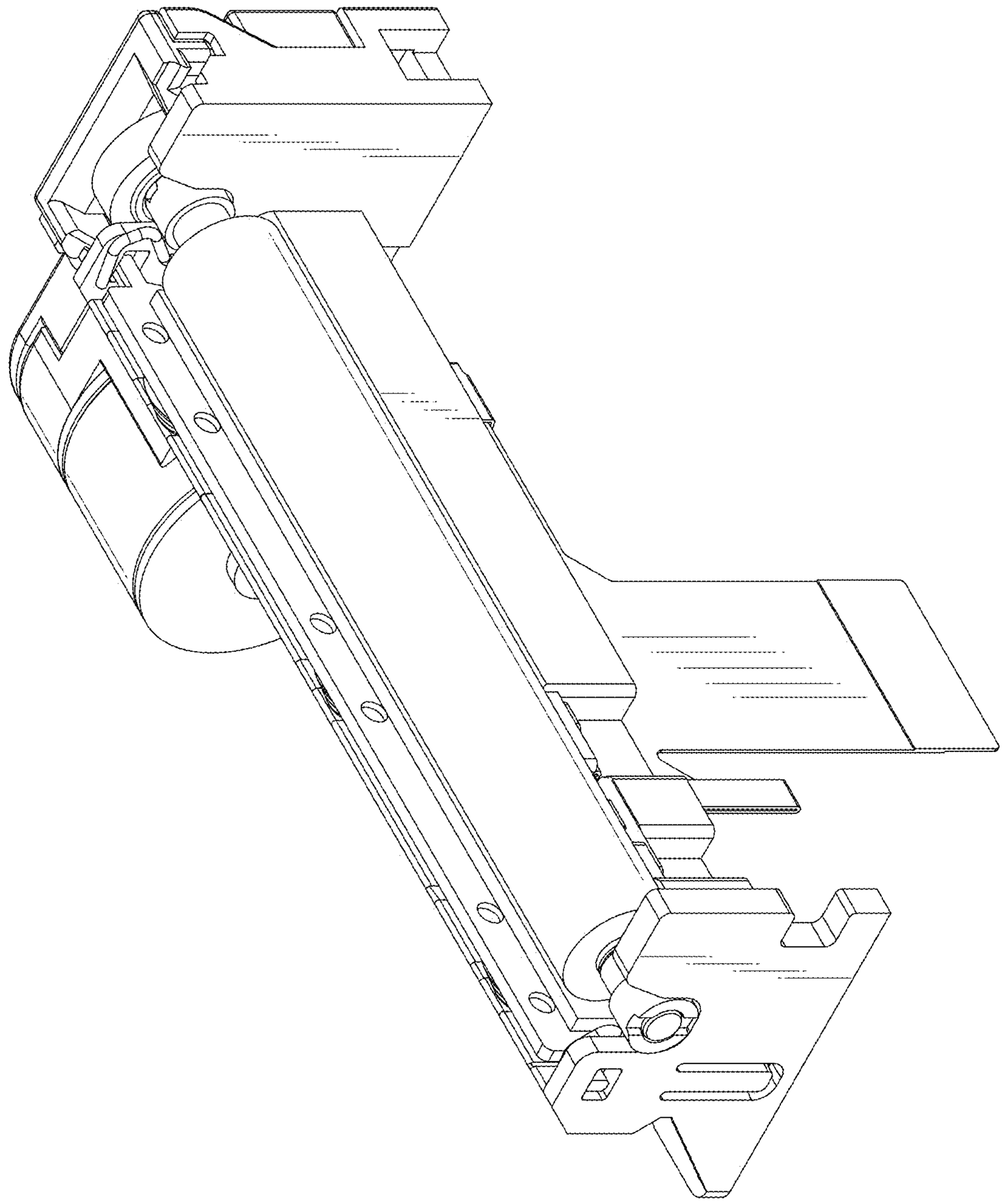

FIG.2

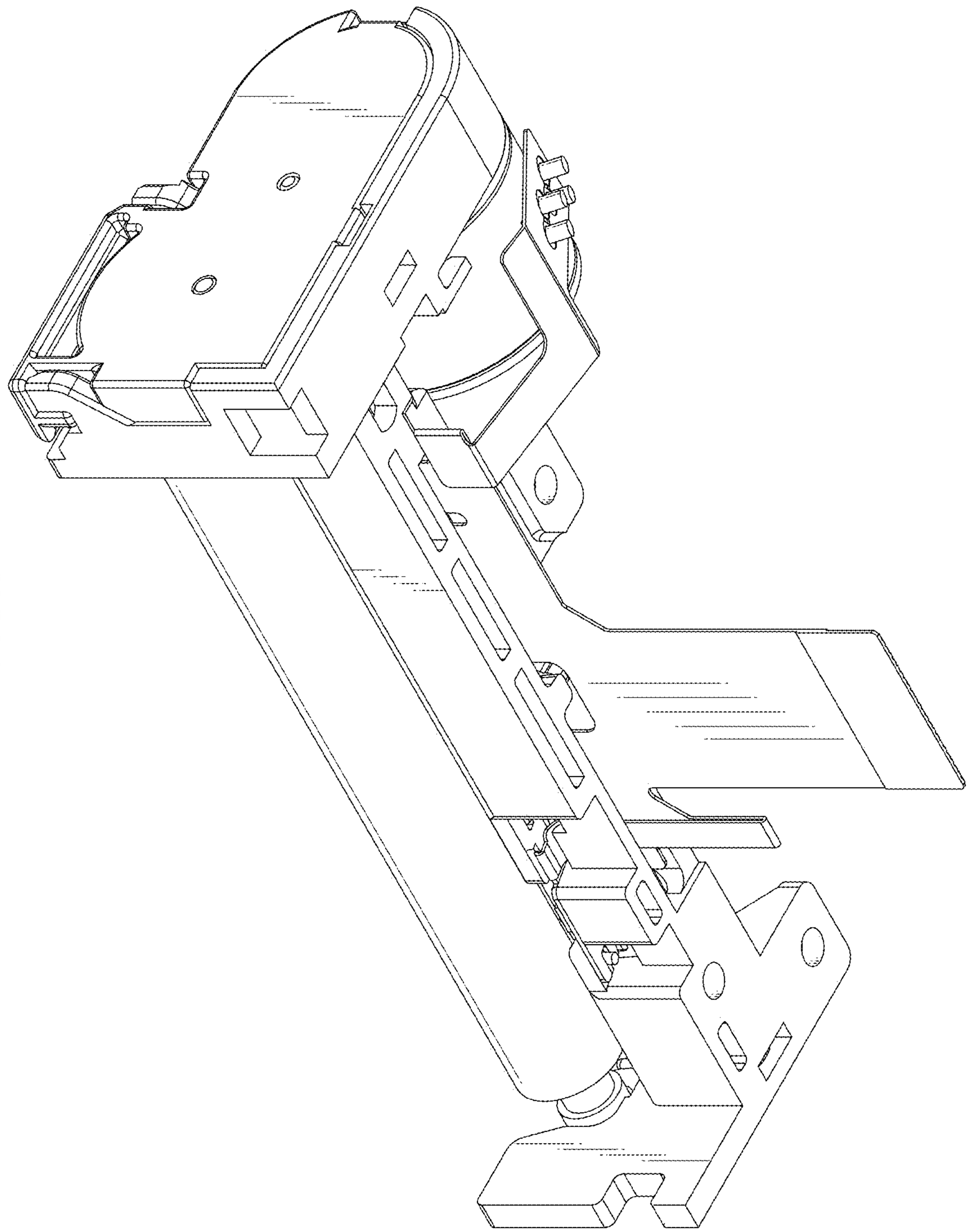

FIG.3

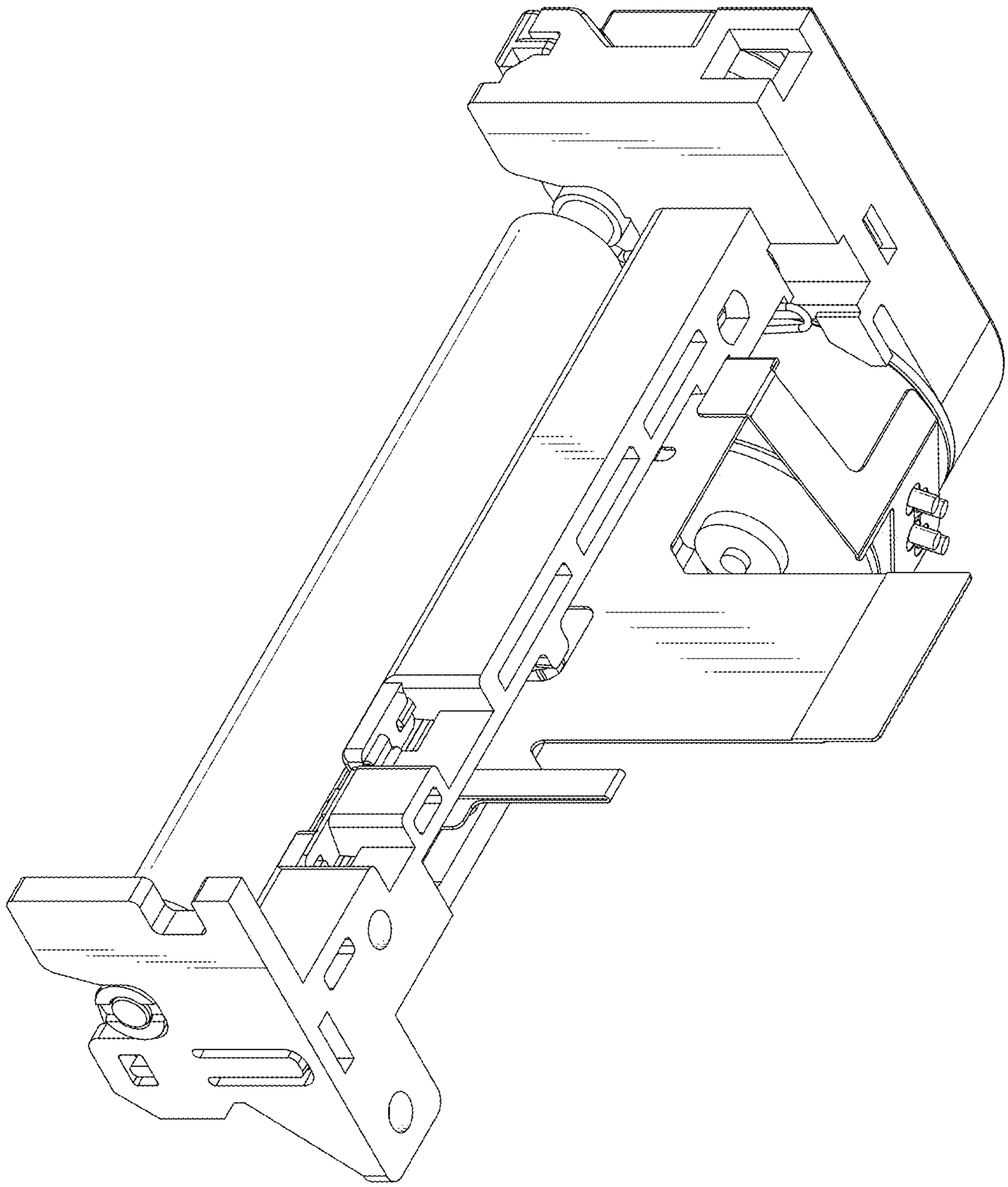

FIG.4

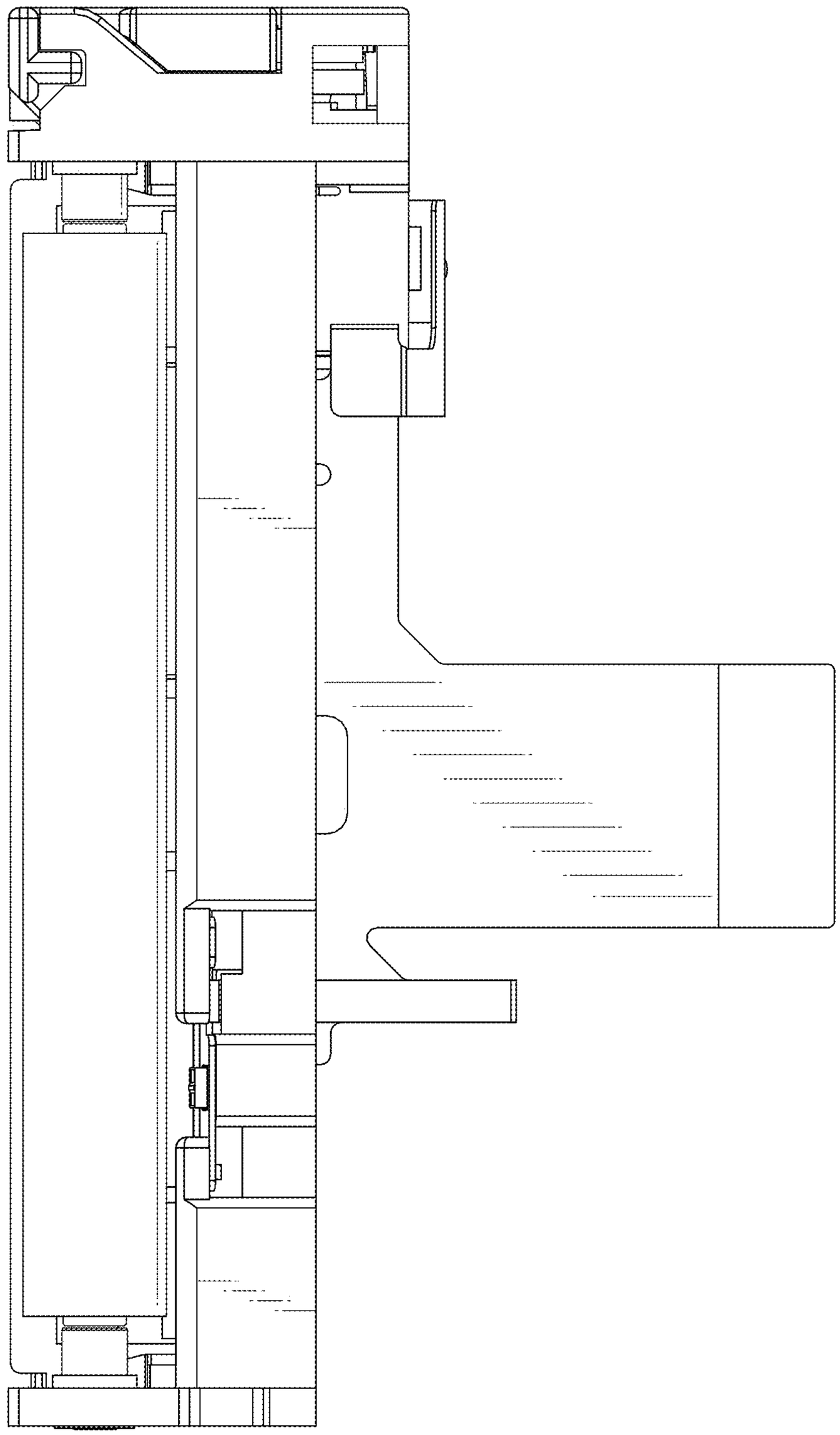

FIG.5

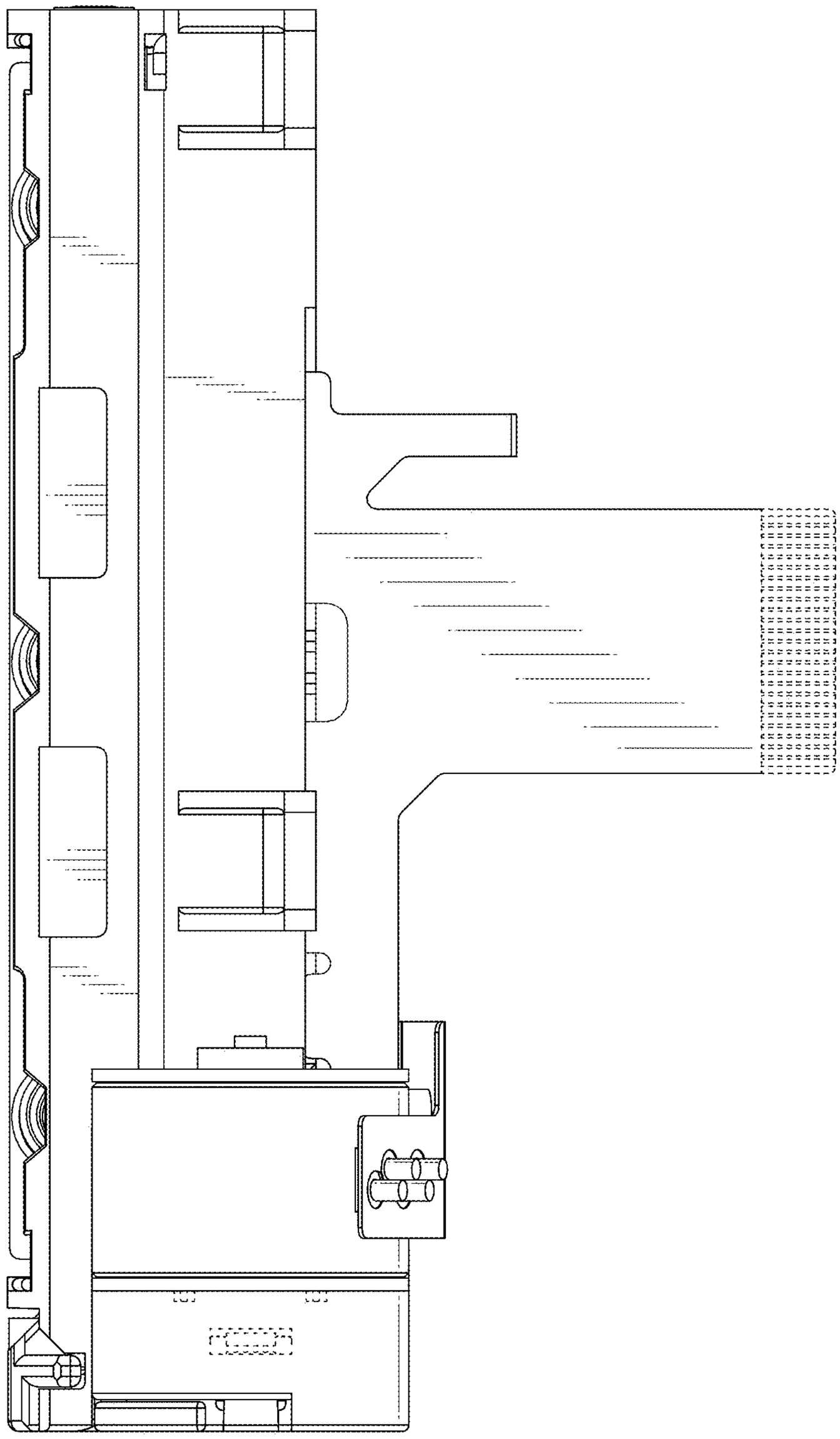

FIG.6

FIG.7

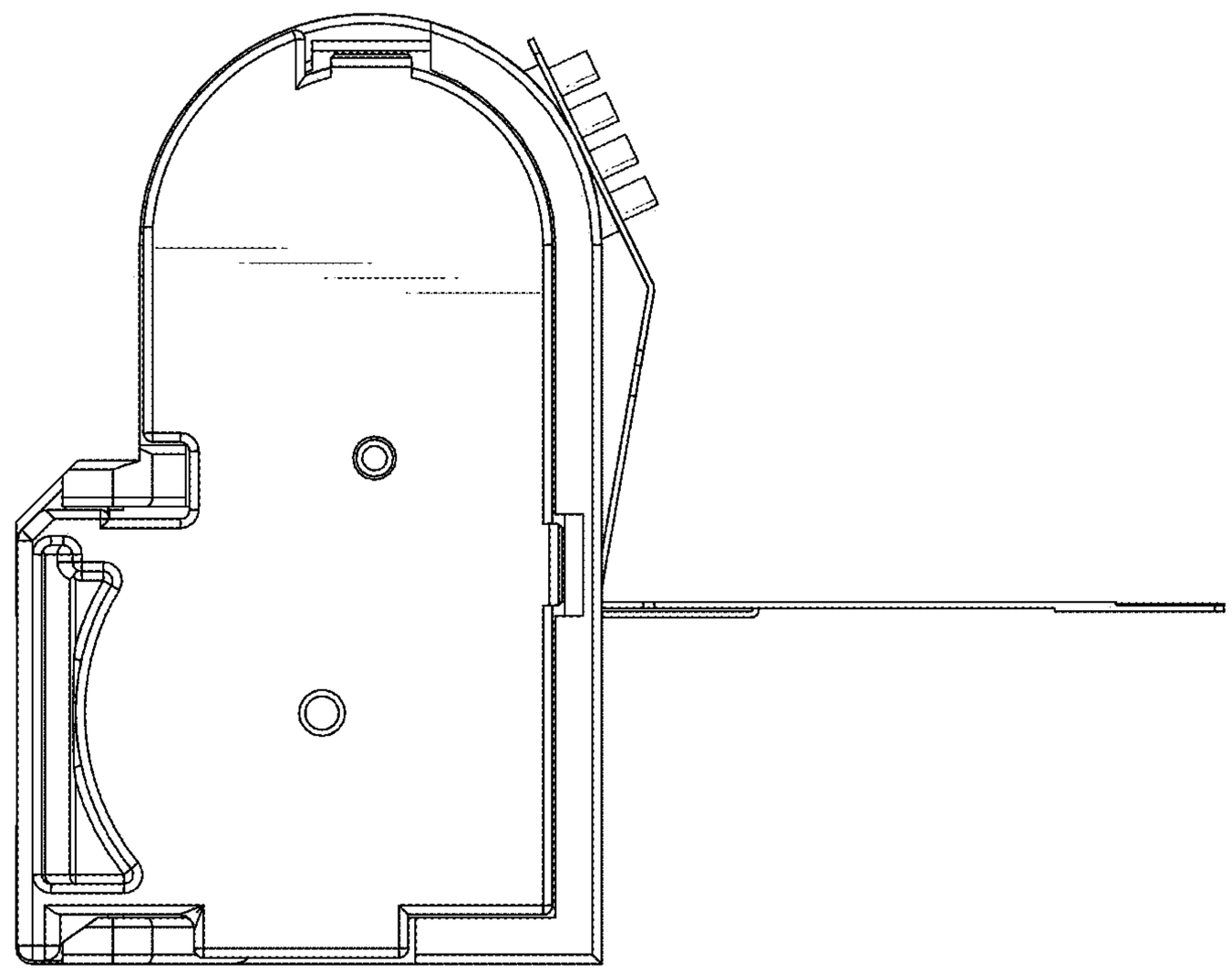

FIG.8

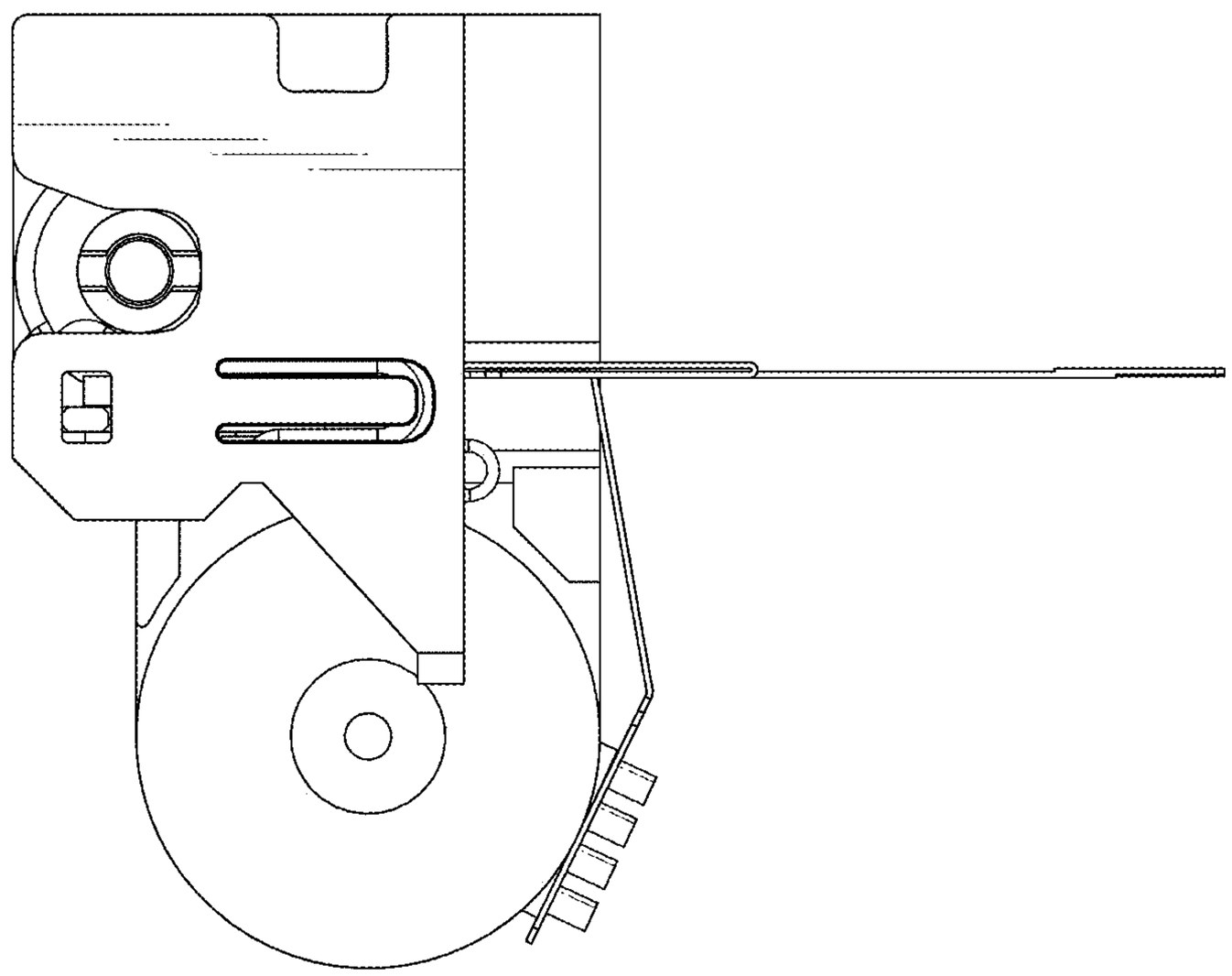

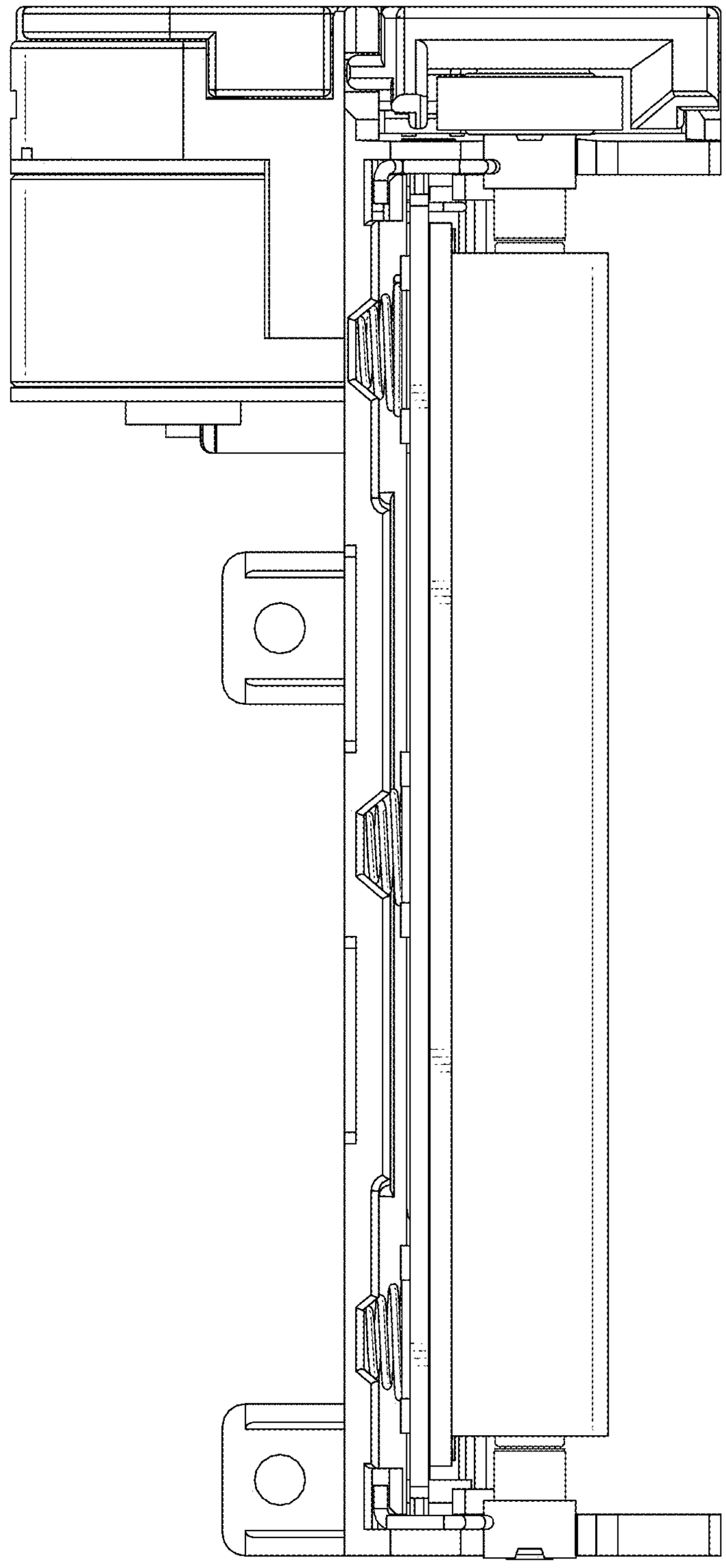

FIG.9

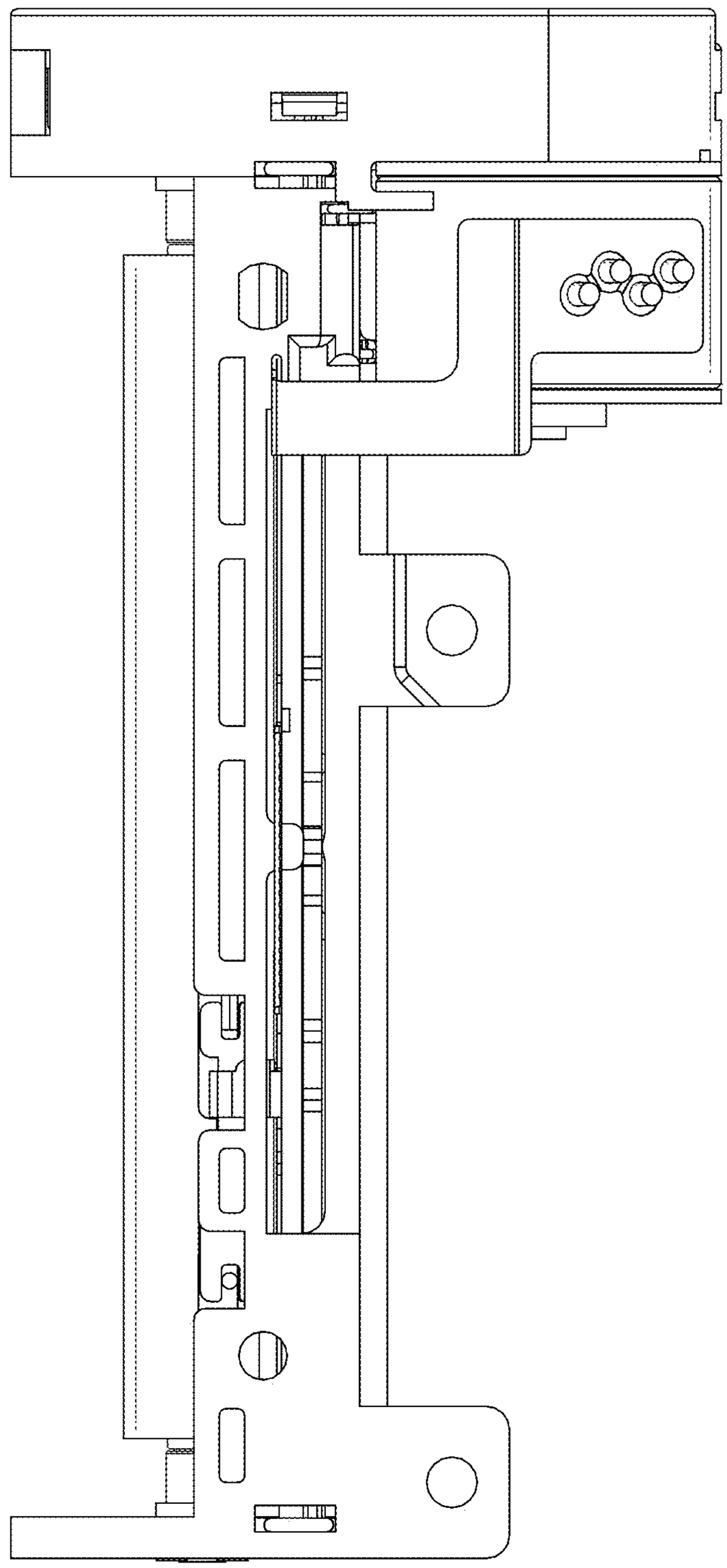

FIG.10