US00D963574S

(12) United States Design Patent

Nishioka et al.

(10) Patent No.: US D963,574 S
(45) Date of Patent: ** Sep. 13, 2022

(54) **POWER SUPPLY**

(71) Applicant: **Fukushima SiC Applied Engineering Inc.**, Fukushima (JP)

(72) Inventors: **Kei Nishioka**, Fukushima (JP); **Toshio Hanada**, Fukushima (JP); **Yoshimi Nishimura**, Fukushima (JP); **Takashi Nakamura**, Fukushima (JP)

(73) Assignee: **Fukushima SiC Applied Engineering Inc.**, Fukushima (JP)

(**) Term: **15 Years**

(21) Appl. No.: **29/731,070**

(22) Filed: **Apr. 10, 2020**

(51) **LOC (13) Cl.** **13-02**

(52) **U.S. Cl.**
USPC **D13/110**

(58) **Field of Classification Search**
USPC D13/110, 101, 107, 118, 121, 123, 125, D13/133, 162, 182, 199
CPC . H01L 23/62; H01L 23/3675; H01L 23/3677; H01L 23/473; H01L 23/4334; H01L 24/34; H01L 25/18; H01L 2924/00; H01L 2924/181; H01L 2924/13091; H01L 2924/13055; H02K 7/1432
See application file for complete search history.

(56) **References Cited**

U.S. PATENT DOCUMENTS

D483,329	S	*	12/2003	Kuo	D13/110
6,952,347	B2	*	10/2005	Baeumel	H01L 23/3677 257/722
D550,617	S	*	9/2007	Wang	D13/101
D598,846	S	*	8/2009	Satoh	D13/110
D651,565	S	*	1/2012	Yura	D13/110
D769,189	S	*	10/2016	Shimura	D13/110

* cited by examiner

Primary Examiner — Derrick E Holland
(74) *Attorney, Agent, or Firm* — Studebaker & Brackett PC

(57) **CLAIM**

The ornamental design for a power supply, as shown and described.

DESCRIPTION

FIG. **1** is front, top, and right side perspective view of a first embodiment of a power supply showing our new design;
FIG. **2** is a front view thereof;
FIG. **3** is a back view thereof;
FIG. **4** is a right view thereof;
FIG. **5** is a top view thereof;
FIG. **6** is a bottom view thereof;
FIG. **7** is a cross-sectional view taken along line **7-7** in FIG. **5**;
FIG. **8** is a cross-sectional view taken along line **8-8** in FIG. **5**;
FIG. **9** is a cross-sectional view taken along lines **9-9** and **9'-9'** in FIG. **5**;
FIG. **10** is front, top, and right side perspective view of a second embodiment of a power supply showing our new design;
FIG. **11** is a front view thereof;
FIG. **12** is a back view thereof;
FIG. **13** is a right view thereof;
FIG. **14** is a top view thereof;
FIG. **15** is a bottom view thereof;
FIG. **16** is a cross-sectional view taken along line **16-16** in FIG. **14**;
FIG. **17** is a cross-sectional view taken along line **17-17** in FIG. **14**; and,
FIG. **18** is a cross-sectional view taken along lines **18-18** and **18'-18'** in FIG. **14**.
The broken lines in the drawings illustrate portions of the power supply that form no part of the claimed design.
The dot-dashed lines define the bounds of the claimed design and form no part thereof.

1 Claim, 10 Drawing Sheets

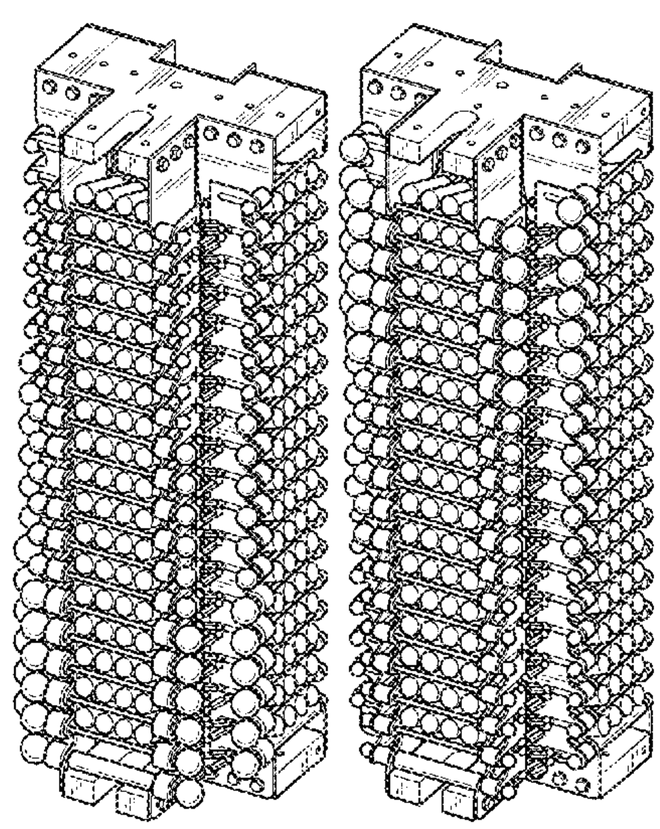

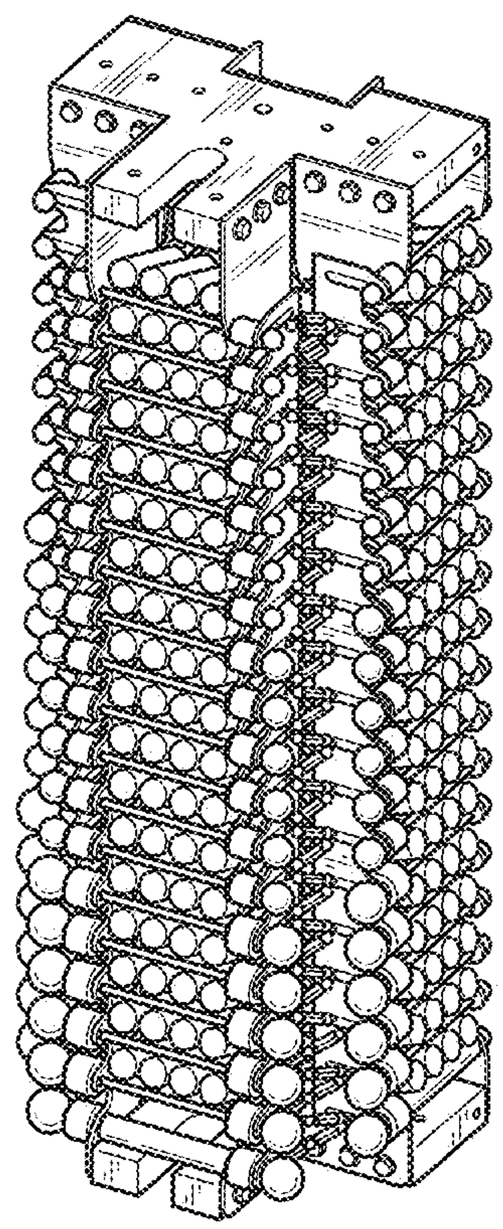

FIG. 1

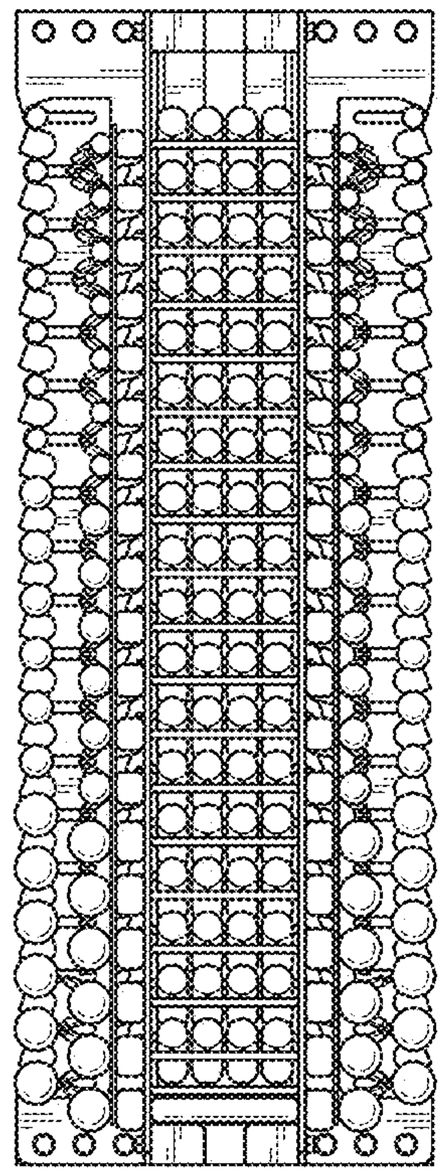

FIG. 2

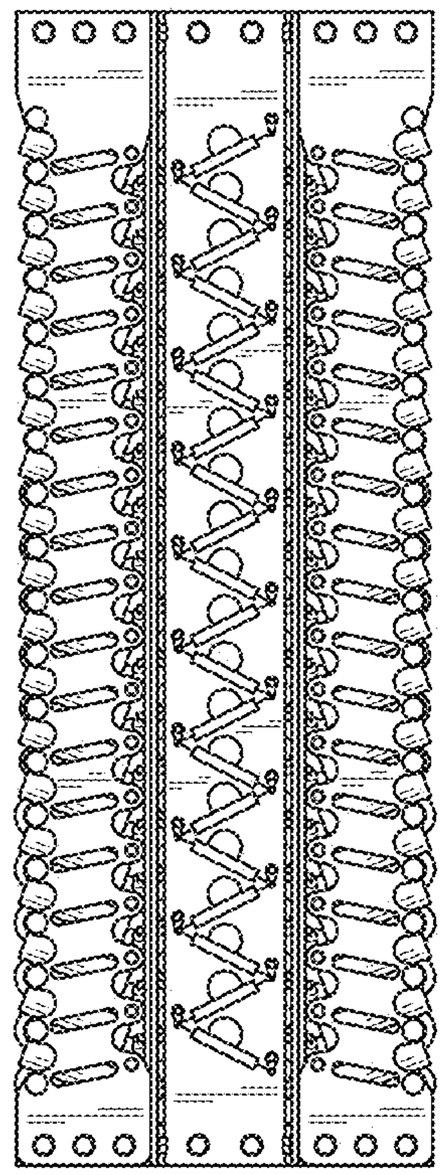

FIG. 3

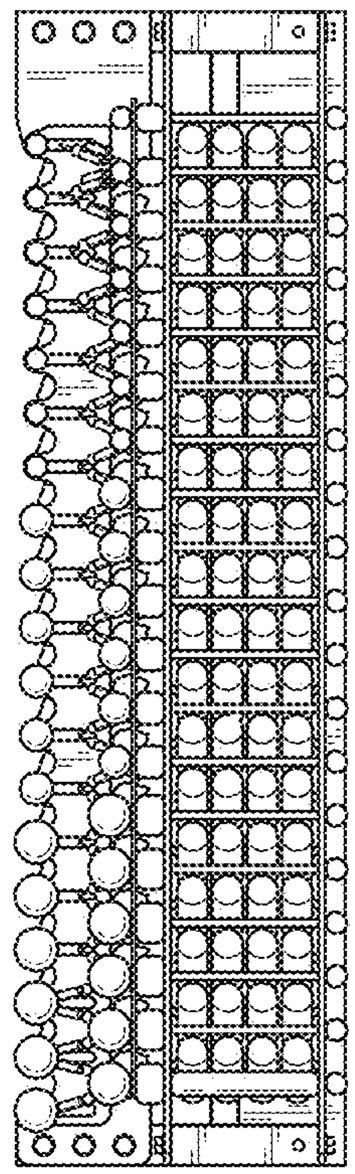

FIG. 4

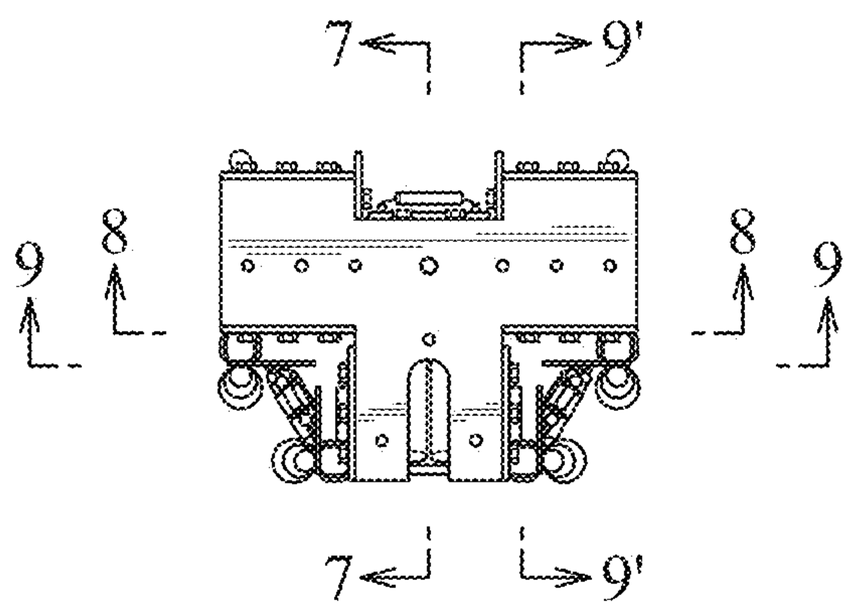

FIG. 5

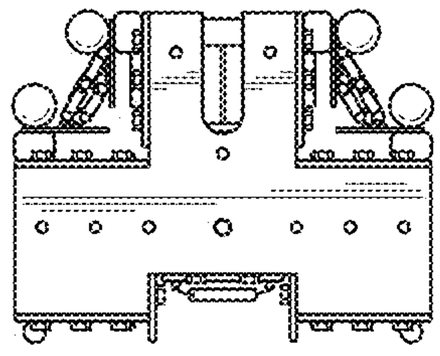

FIG. 6

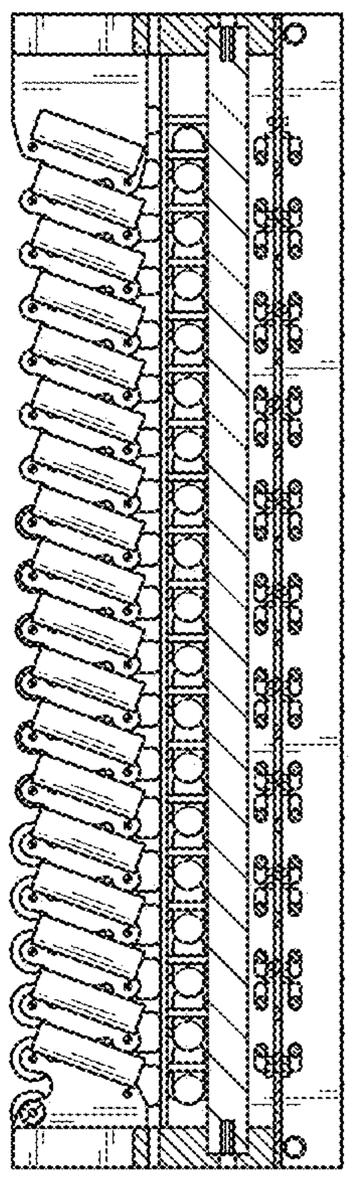

FIG. 7

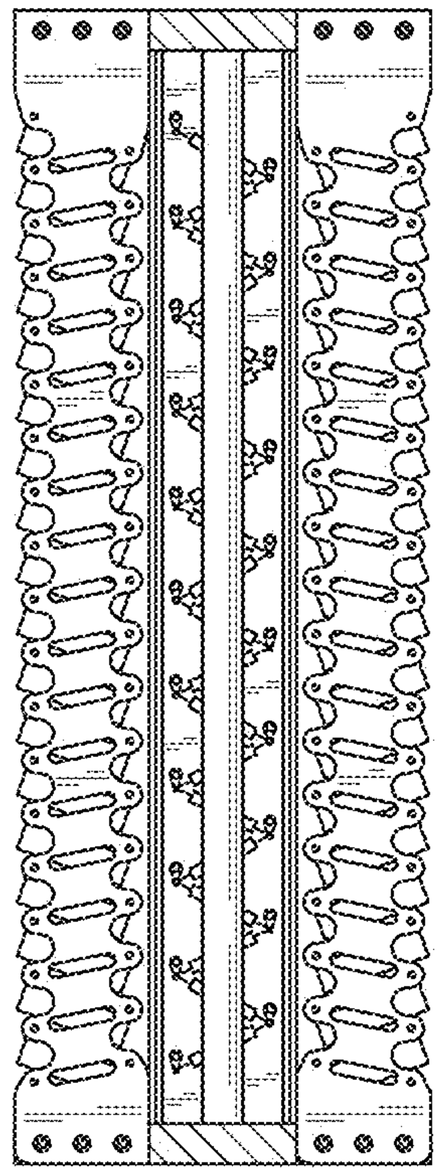

FIG. 8

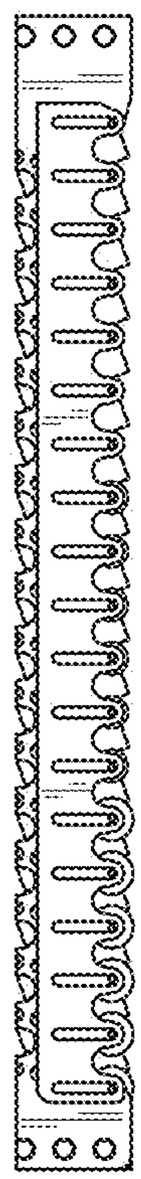

FIG. 9

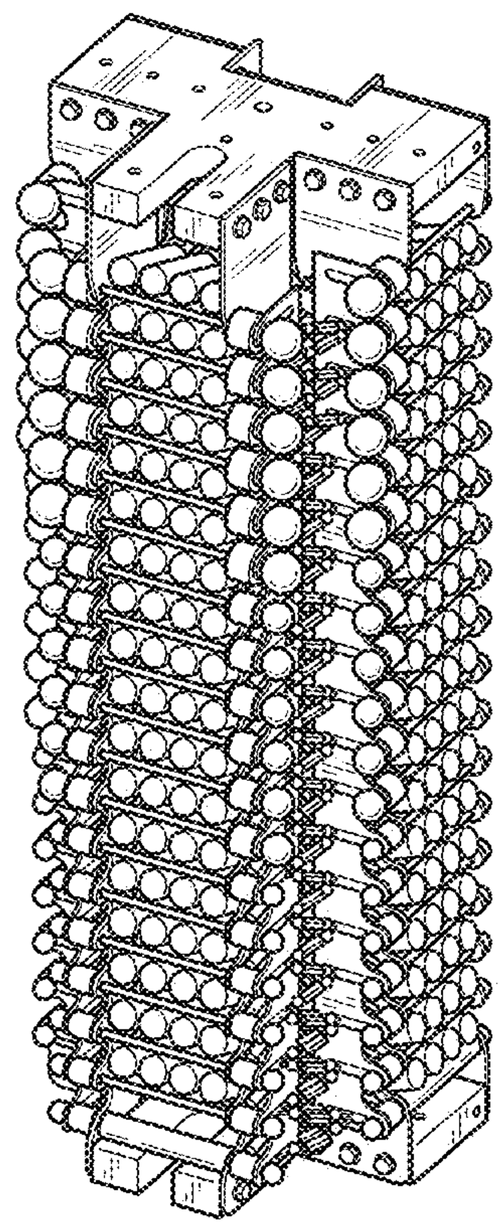

FIG. 10

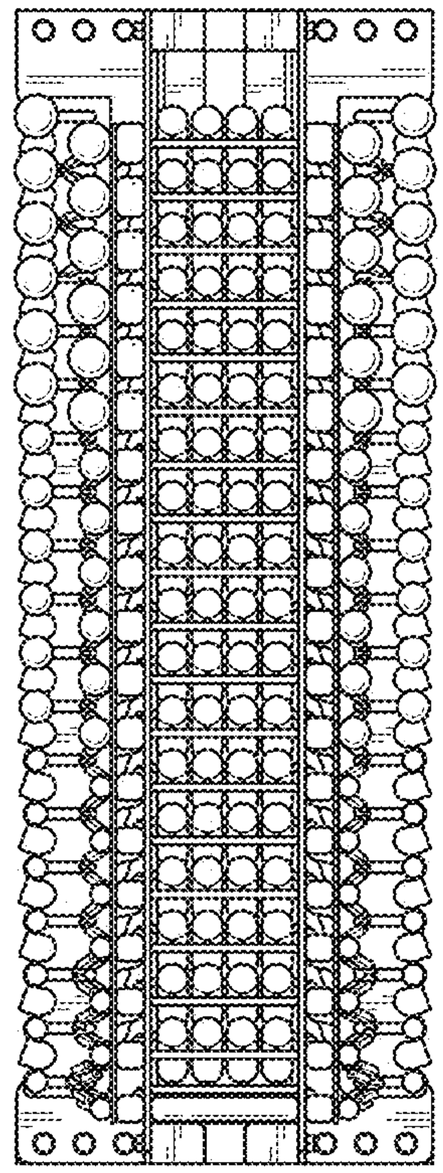

FIG. 11

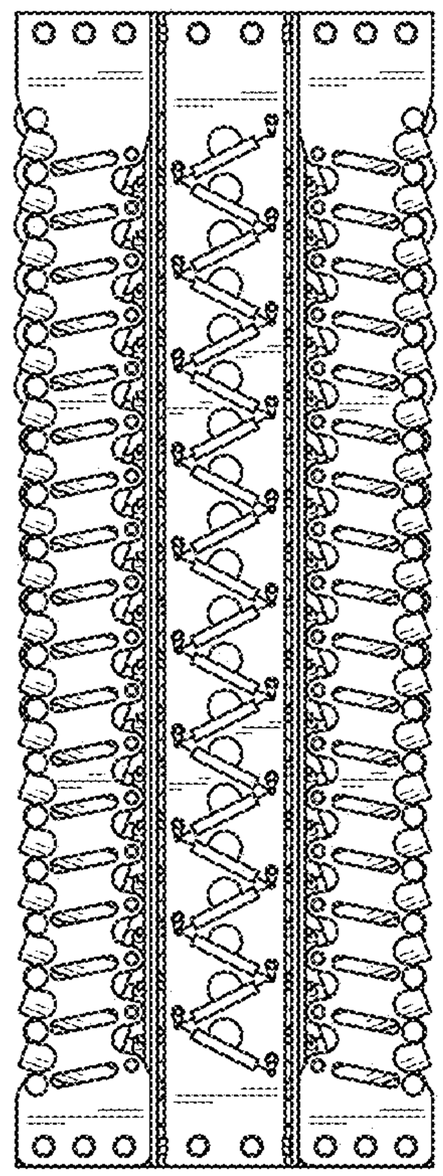

FIG. 12

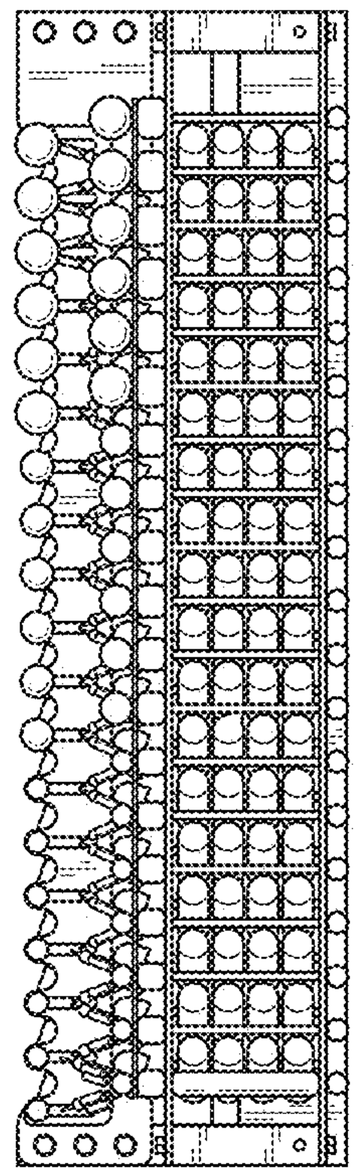

FIG. 13

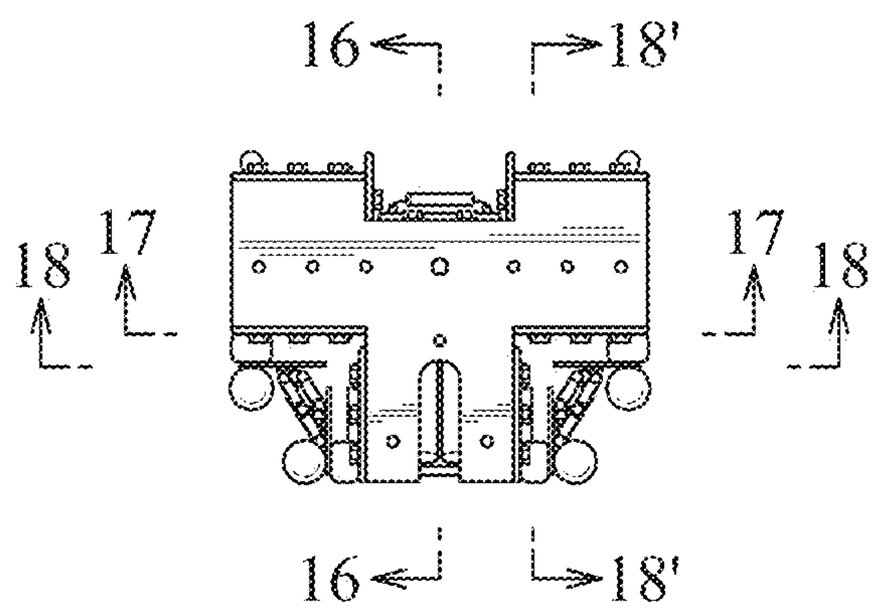

FIG. 14

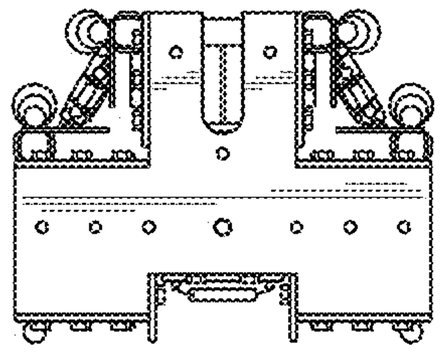

FIG. 15

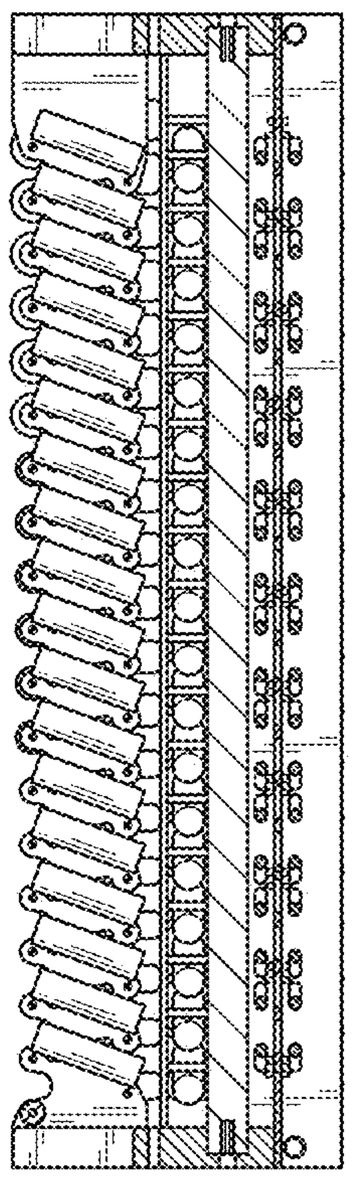

FIG. 16

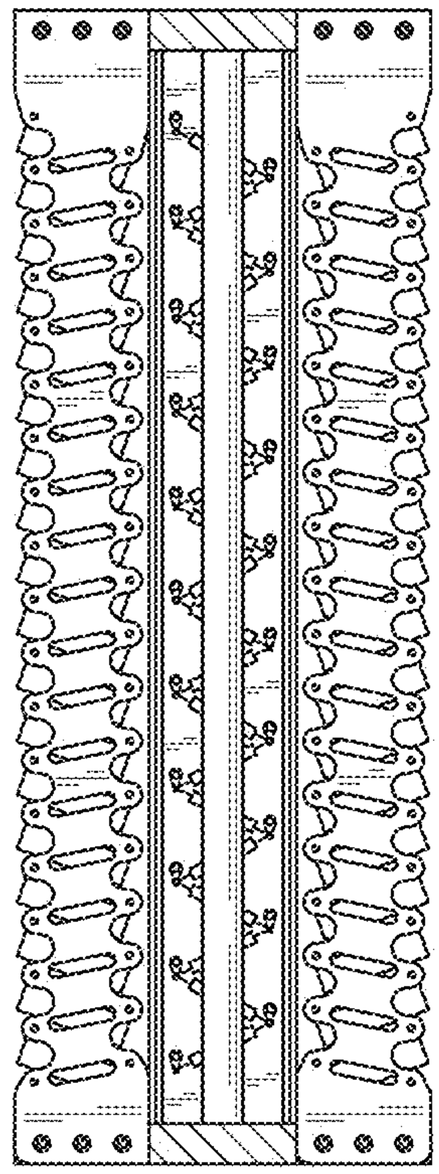

FIG. 17

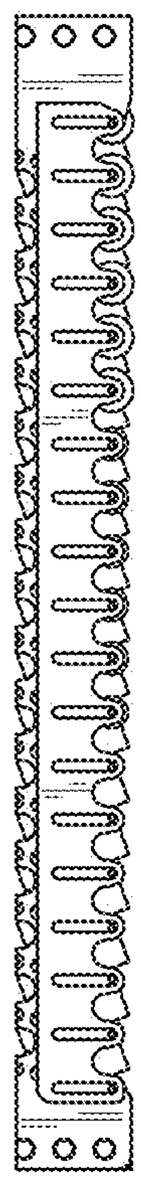

FIG. 18