US00D963565S

(12) United States Design Patent

Zhang

(10) Patent No.: US D963,565 S
(45) Date of Patent: ** Sep. 13, 2022

(54) **CHARGER FOR ELECTRIC VEHICLE**

(71) Applicant: **SIEMENS LTD., CHINA**, Beijing (CN)

(72) Inventor: **Cong Zhang**, Shanghai (CN)

(73) Assignee: **Siemens Aktiengesellschaft**, Munich (DE)

(**) Term: **15 Years**

(21) Appl. No.: **29/724,947**

(22) Filed: **Feb. 20, 2020**

(30) **Foreign Application Priority Data**

Aug. 21, 2019 (CN) 201930456603.6

(51) **LOC (13) Cl.** **13-02**

(52) **U.S. Cl.**
USPC **D13/107**

(58) **Field of Classification Search**
USPC D13/103, 106, 107, 108, 109, 110, 112, D13/116, 118, 119, 152, 184, 199; D7/9.1, 9.2; D14/432, 433, 434; D15/9.1, 9.2
CPC H02J 7/0027; F02N 11/12; H05K 5/00; H02G 3/10
See application file for complete search history.

(56) **References Cited**

U.S. PATENT DOCUMENTS

D400,851 S * 11/1998 Culver D13/107
D655,242 S * 3/2012 Holthusen D13/107
D682,779 S * 5/2013 Magnusson D13/107
D686,984 S * 7/2013 Henderson D13/107
D692,374 S * 10/2013 Choi D13/107
D694,179 S * 11/2013 Zeppetzauer D13/107
D733,648 S * 7/2015 Bianco D13/107
D743,331 S * 11/2015 Racine D13/107
D790,456 S * 6/2017 Aiello D13/107
D791,074 S * 7/2017 Kim D13/107
2012/0268067 A1* 10/2012 Poulsen B60L 53/14 320/109
2015/0054462 A1* 2/2015 Weidinger H02J 7/007192 320/109

(Continued)

FOREIGN PATENT DOCUMENTS

JP 2010283947 A * 12/2010

OTHER PUBLICATIONS

"EV Charging Station". Found online May 19, 2021 at greencarreport.com. Reference dated Mar. 29, 2016. Retrieved from https://www.greencarreports.com/news/1103133_how-to-buy-an-electric-car-charging-station-buyers-guide-to-evses (Year: 2016).*

(Continued)

Primary Examiner — Kendra Leslie Hamilton
Assistant Examiner — Amanda Christensen
(74) *Attorney, Agent, or Firm* — Henry M. Feiereisen LLC

(57) **CLAIM**

The ornamental design for a charger for electric vehicle, as shown and described.

DESCRIPTION

FIG. **1** is a front view of a a charger for electric vehicle, showing my new design;
FIG. **2** is a rear view thereof;
FIG. **3** is a top view thereof;
FIG. **4** is a bottom view thereof;
FIG. **5** is a right side view thereof;
FIG. **6** is a left side view thereof; and,
FIG. **7** is a top, front and left side perspective view thereof.
The broken lines in the drawings depict portions of the charger for electric vehicle that form no part of the claimed design.

1 Claim, 7 Drawing Sheets

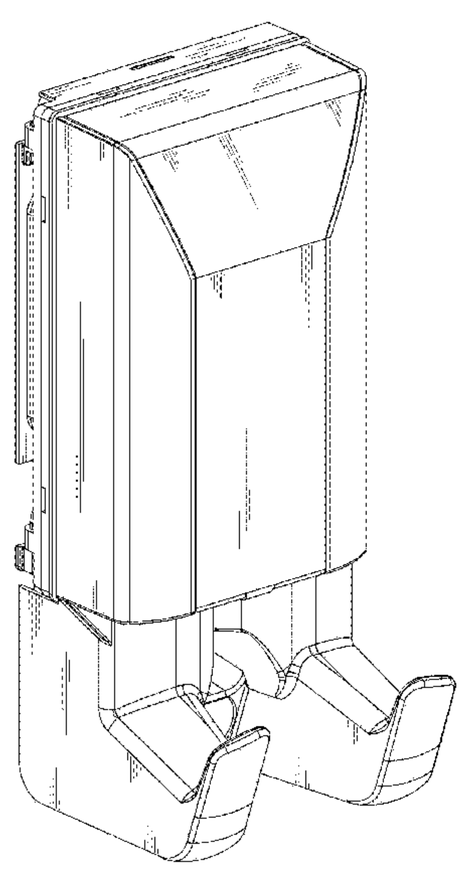

(56) **References Cited**

U.S. PATENT DOCUMENTS

2018/0069358 A1* 3/2018 Miller H02J 7/0042

OTHER PUBLICATIONS

"Kecontact charging point". Found online May 19, 2021 at amazon.co.uk. Reference dated Oct. 14, 2016. Retrieved from https://www.amazon.co.uk/Kecontact-P20-92947-Keba-charging-point-cable/dp/B00U9QQWV6. (Year: 2016).*
"VersiCharge AC Gen 3". Found online May 20, 2021 at youtube.com. Reference dated Aug. 11, 2020. Retrieved from https://www.youtube.com/watch?v=T8LQryGLLb4. (Year: 2020).*

* cited by examiner

FIG 1

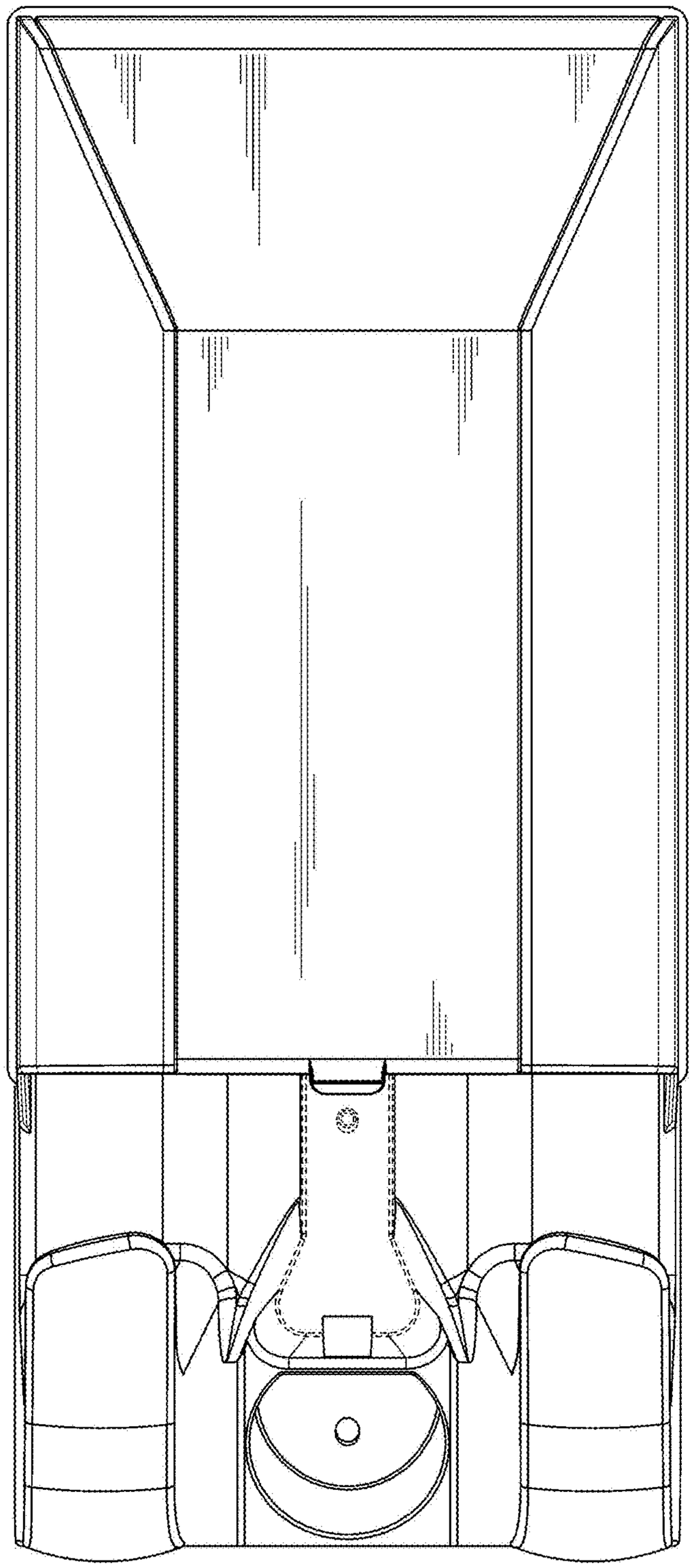

FIG 2

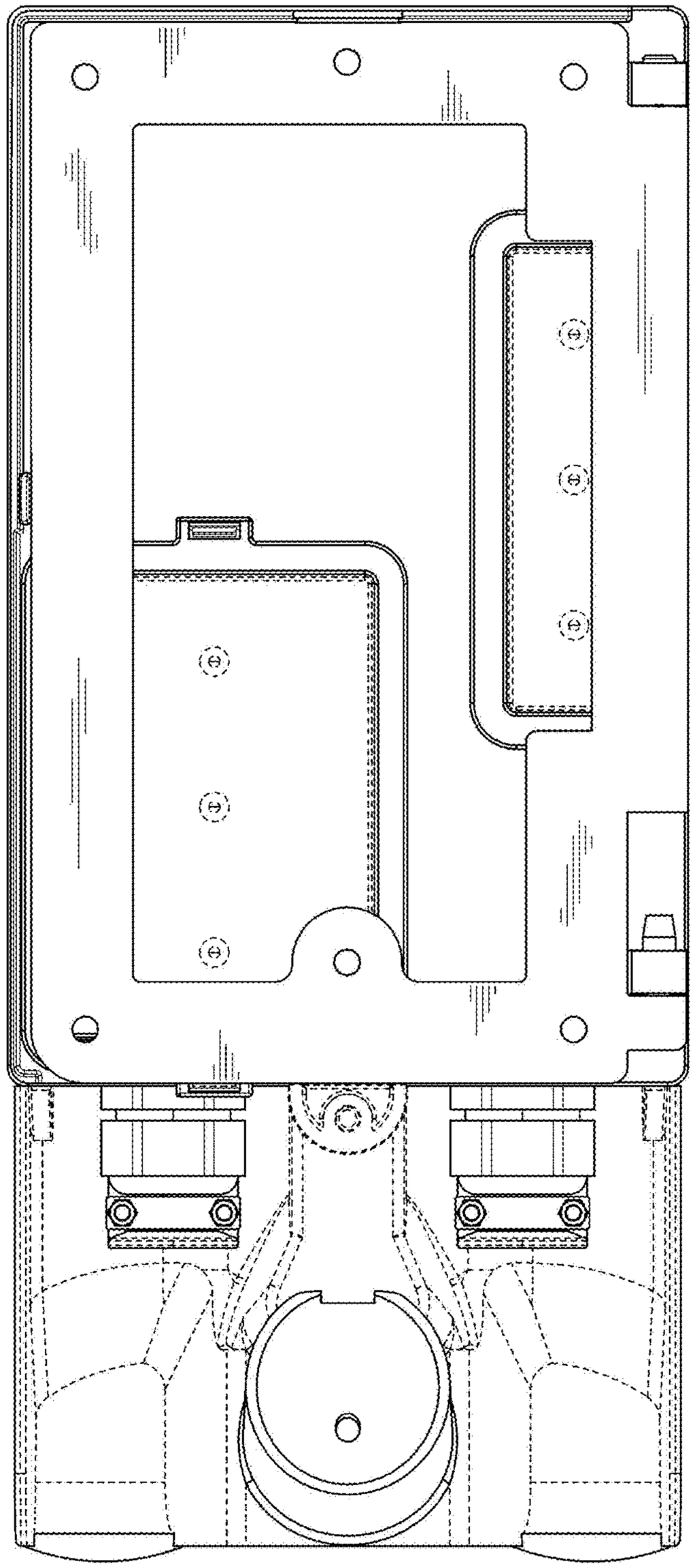

FIG 3

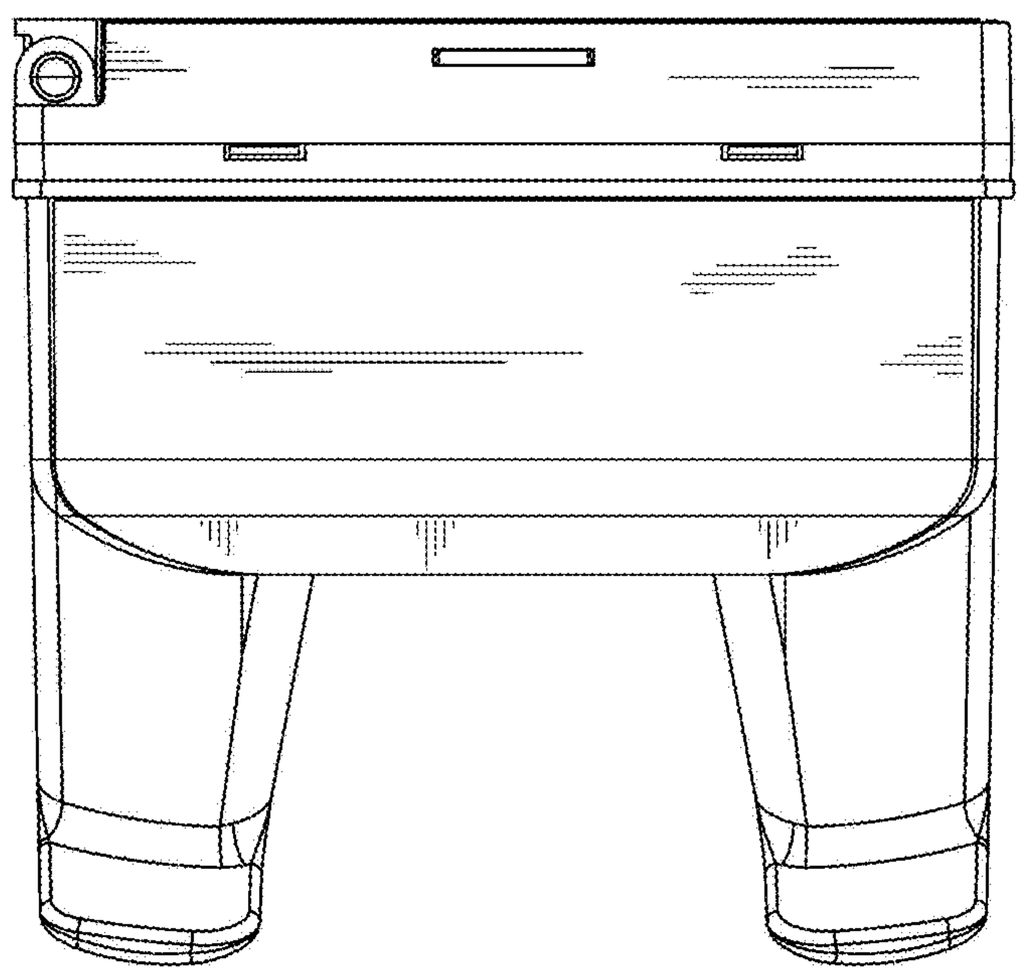

FIG 4

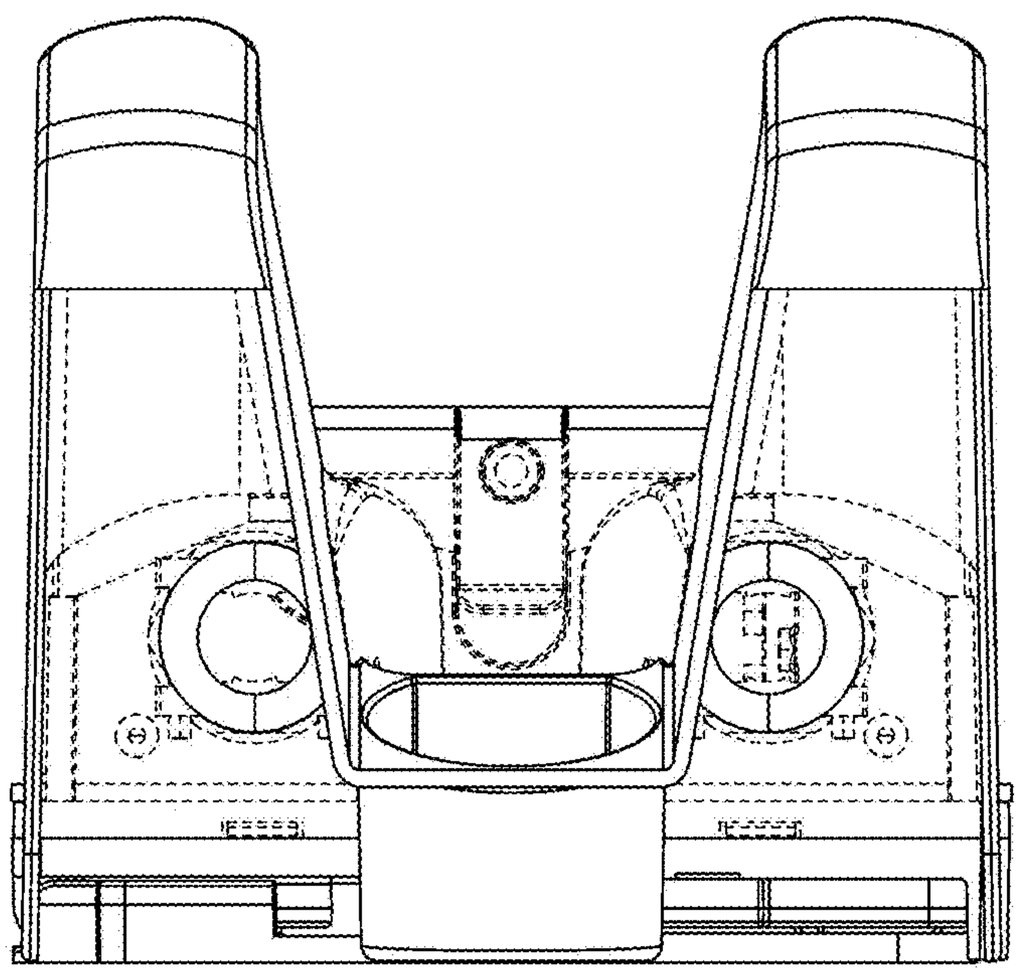

FIG 5

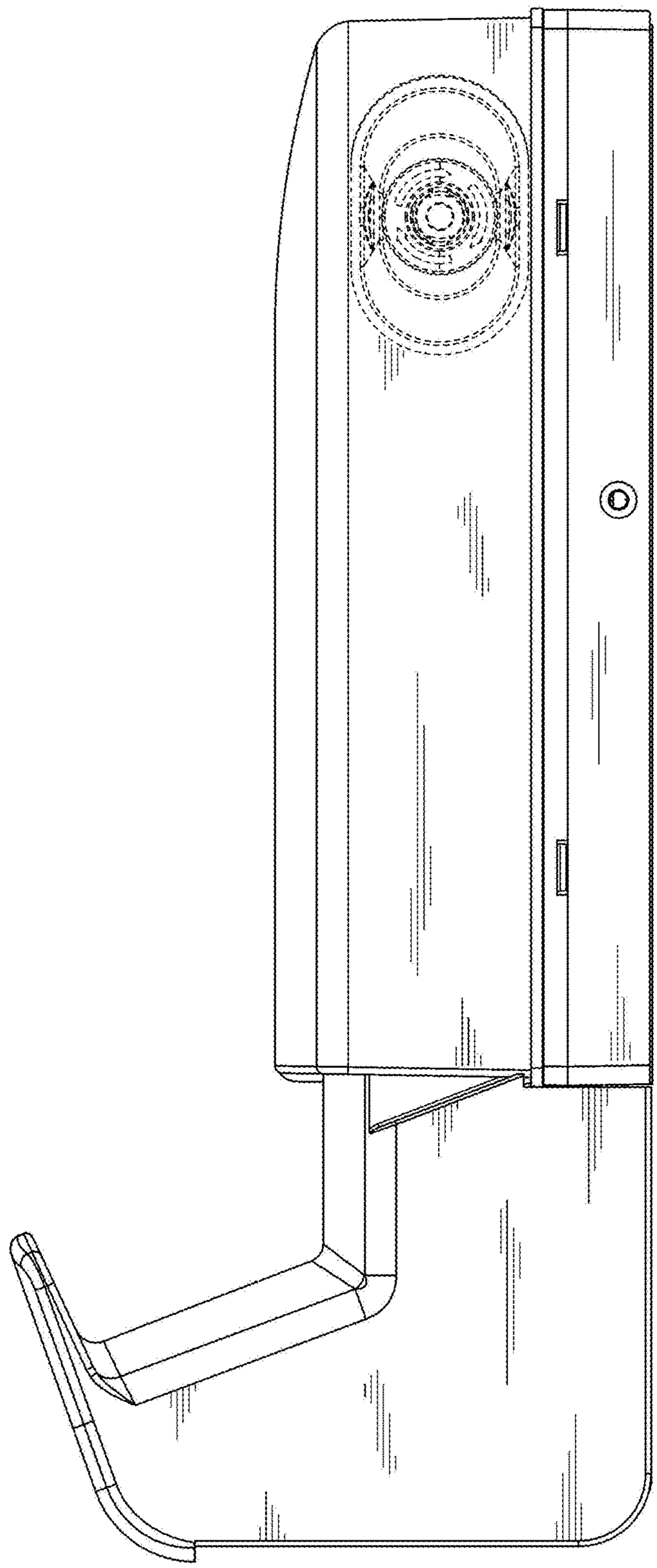

FIG 6

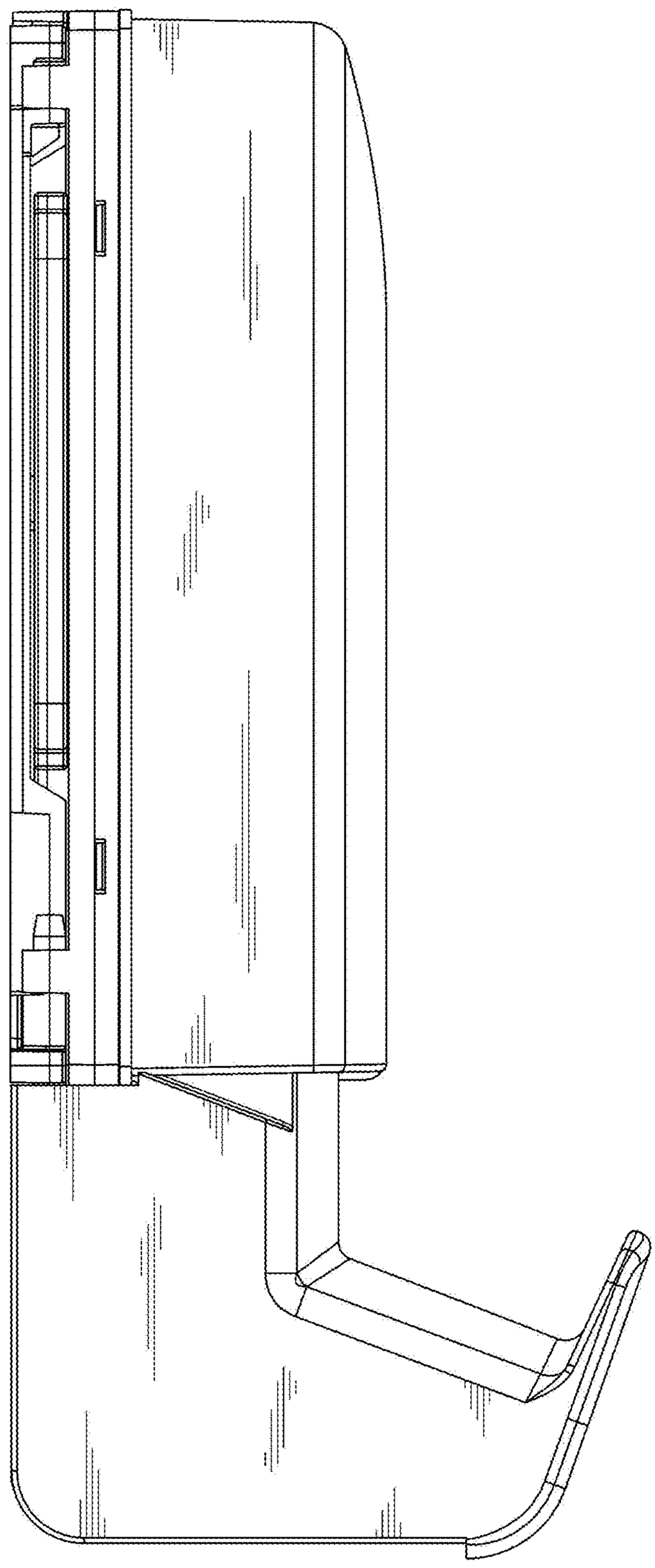
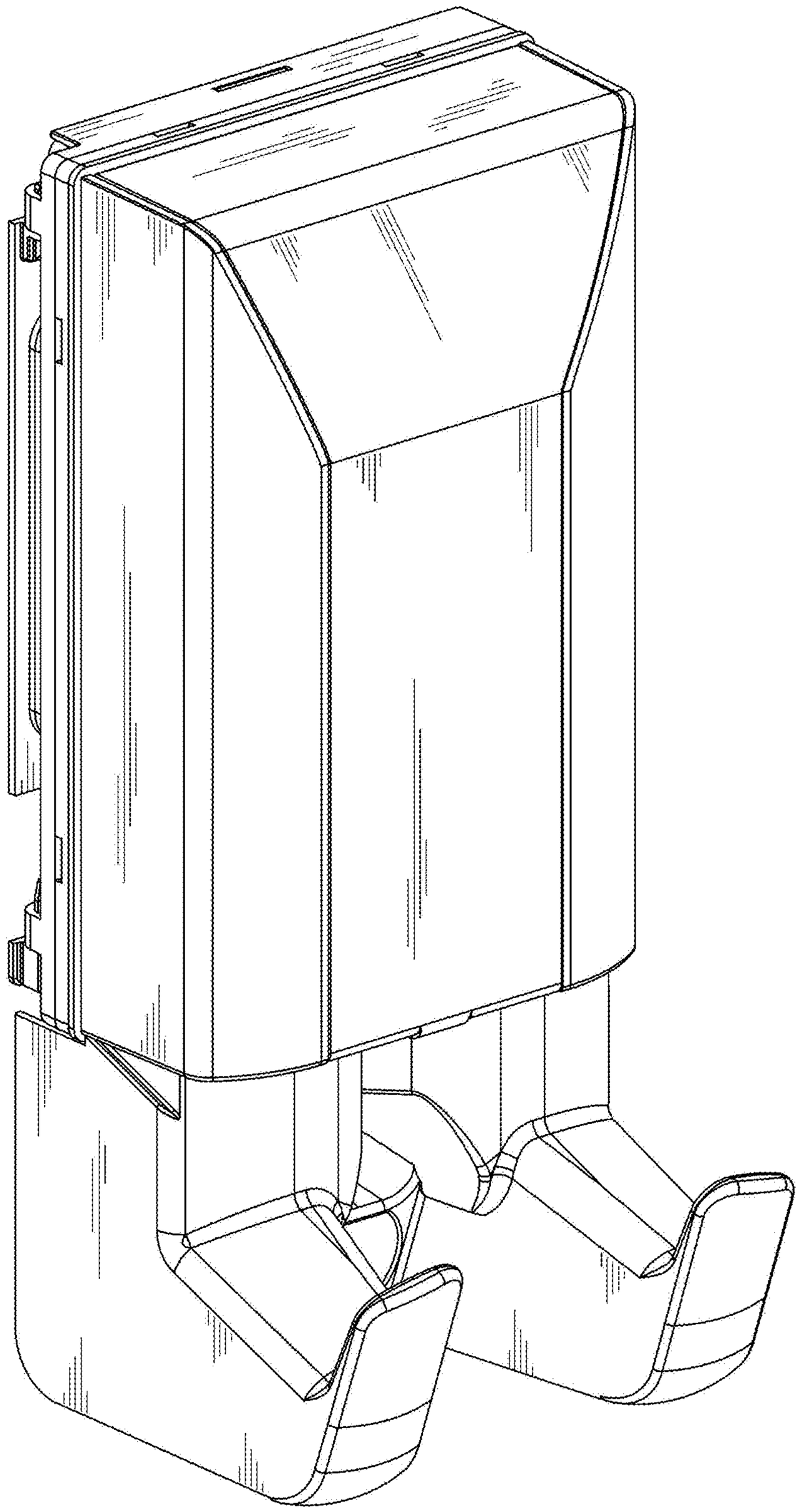
FIG 7