US00D963178S

(12) United States Design Patent

Jin

(10) Patent No.: US D963,178 S
(45) Date of Patent: ** Sep. 6, 2022

(54) **FULL FACE SKIN DETECTOR**

(71) Applicant: **Shenzhen Moreme Smart Tech Co., Ltd**, Shenzhen (CN)

(72) Inventor: **Bo Jin**, Shenzhen (CN)

(**) Term: **15 Years**

(21) Appl. No.: **29/774,631**

(22) Filed: **Mar. 18, 2021**

(51) **LOC (13) Cl.** **28-03**

(52) **U.S. Cl.**
USPC **D24/209**

(58) **Field of Classification Search**
USPC D24/158, 185, 186, 187, 200, 209, 210; D26/104, 106, 107
CPC A61B 5/441; A61B 5/442; A61B 5/0531; A61B 5/0533; A61B 5/0537; A61B 5/0077
See application file for complete search history.

(56) **References Cited**

U.S. PATENT DOCUMENTS

D547,437	S		7/2007	Asai	
D548,326	S		8/2007	Asai	
D557,403	S		12/2007	Asai	
D621,515	S	*	8/2010	Chua	D24/186
D629,113	S	*	12/2010	Wodecki	D24/186
D740,431	S	*	10/2015	Fischler	D24/209
D762,863	S	*	8/2016	Kim	D24/186
D835,291	S	*	12/2018	Lei	D24/209
D844,792	S	*	4/2019	Choe	D24/186
D857,219	S	*	8/2019	Chew	D24/210
D905,260	S	*	12/2020	Shenfarber	D24/209
2015/0156298	A1*		6/2015	Ikemoto	A61B 5/6898 455/556.1
2017/0249436	A1*		8/2017	Miller	A61B 5/442
2019/0183420	A1*		6/2019	Shenfarber	A42B 3/042
2020/0342213	A1*		10/2020	Dissanayake	A45D 44/005
2021/0183058	A1*		6/2021	Oh	A61B 5/0077

FOREIGN PATENT DOCUMENTS

CN	201630134270	* 11/2016
CN	201630489851	* 2/2017
CN	201930087709.3	* 8/2019
CN	202030410017.0	* 12/2020

* cited by examiner

Primary Examiner — Anhdao Doan

(57) **CLAIM**

The ornamental design for a full face skin detector, as shown and described.

DESCRIPTION

FIG. **1** is a first perspective view of a full face skin detector showing my new design;
FIG. **2** is a second perspective view thereof;
FIG. **3** is a front view thereof;
FIG. **4** is a back view thereof;
FIG. **5** is a left side view thereof;
FIG. **6** is a right side view thereof;
FIG. **7** is a top view thereof;
FIG. **8** is a bottom view thereof; and,
FIG. **9** is an enlarged view of the selected portion in FIG. **2**.
The broken lines shown in the drawings depict portions of the full face skin detector in which the design is embodied that form no part of the claimed design.

1 Claim, 9 Drawing Sheets

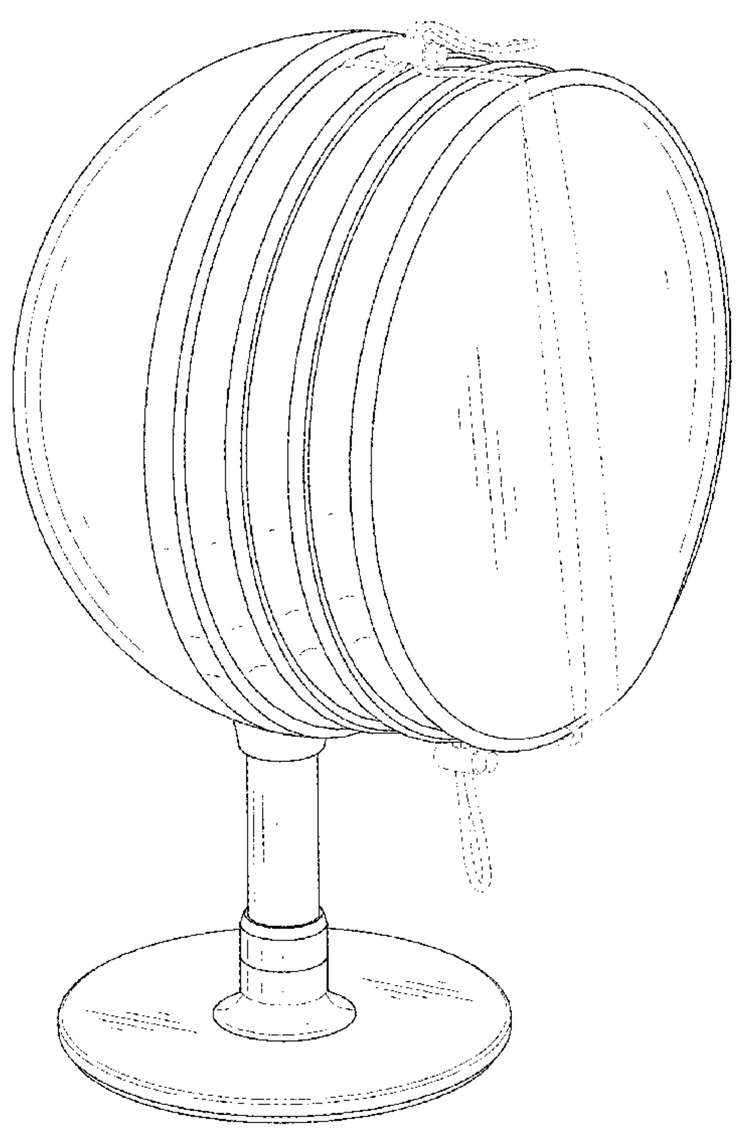

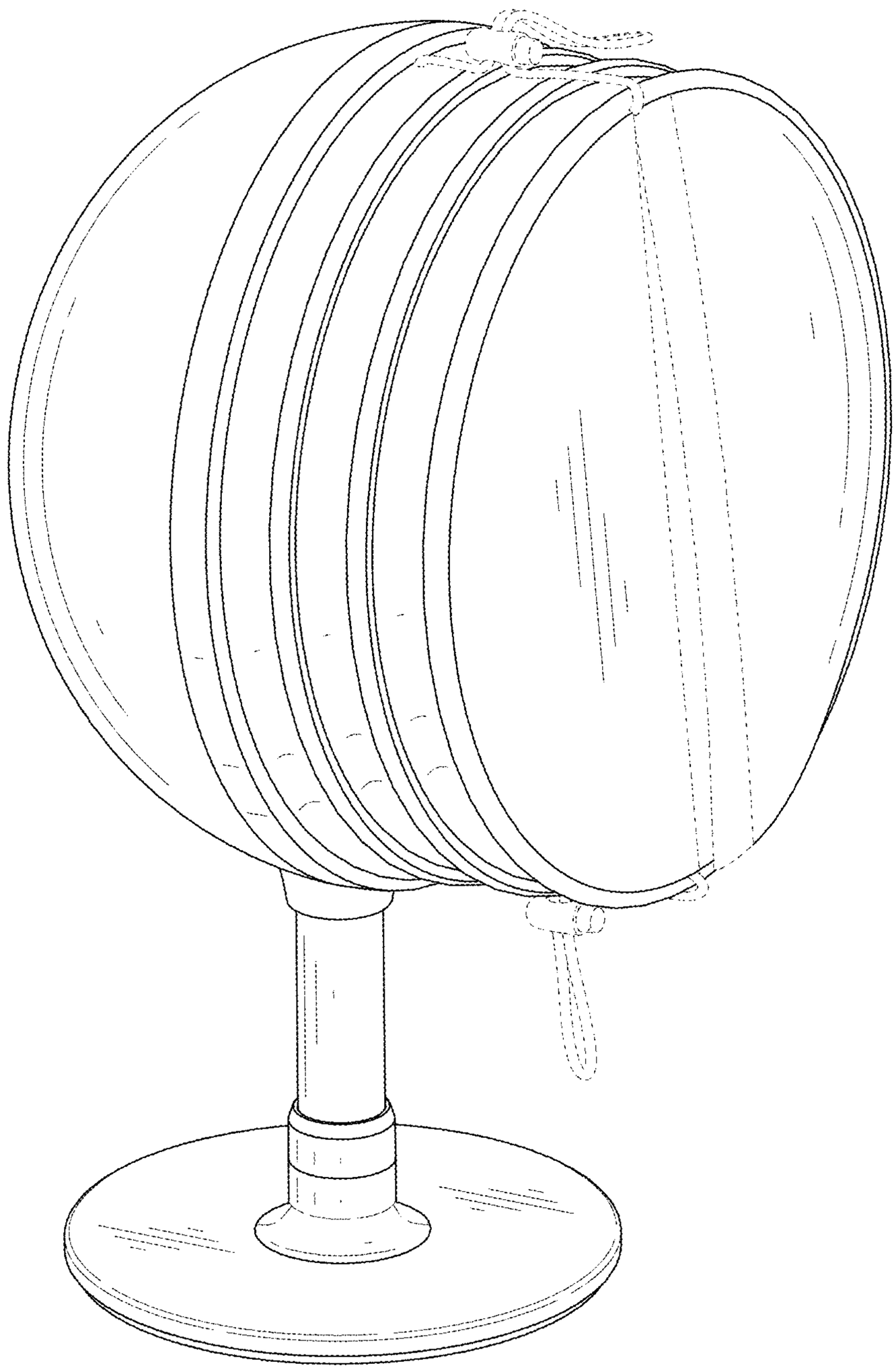

FIG. 1

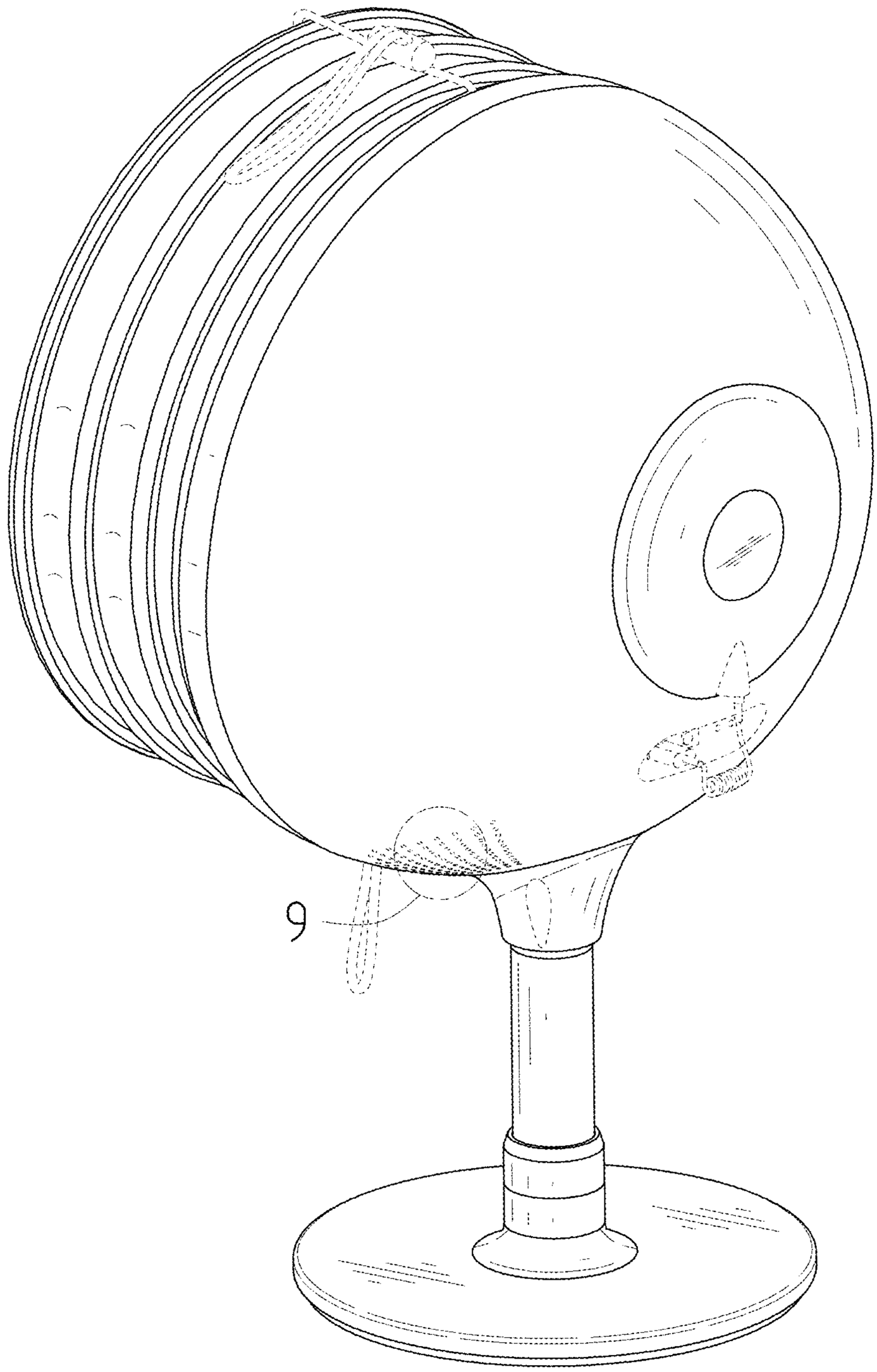

FIG. 2

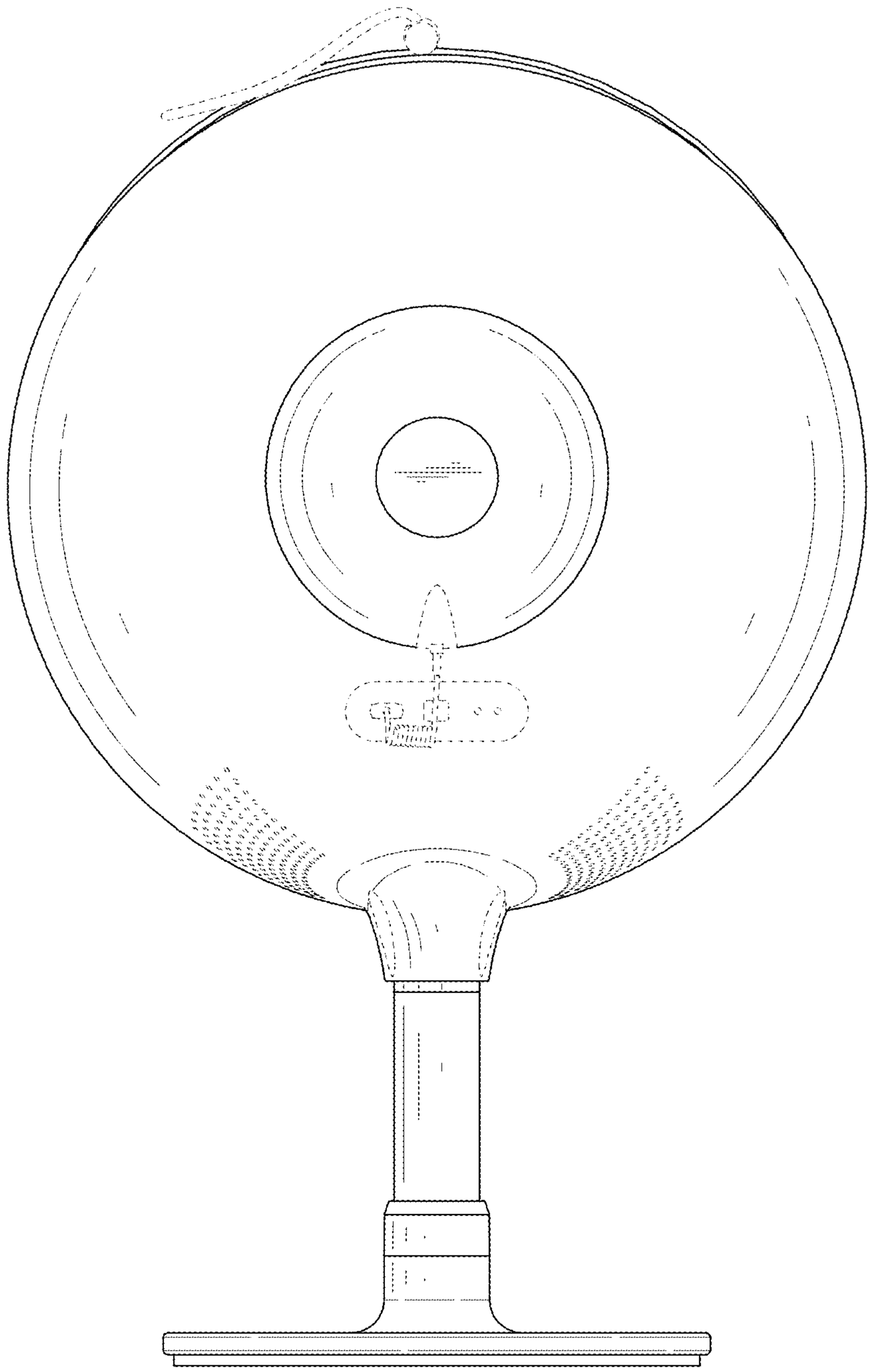

FIG. 3

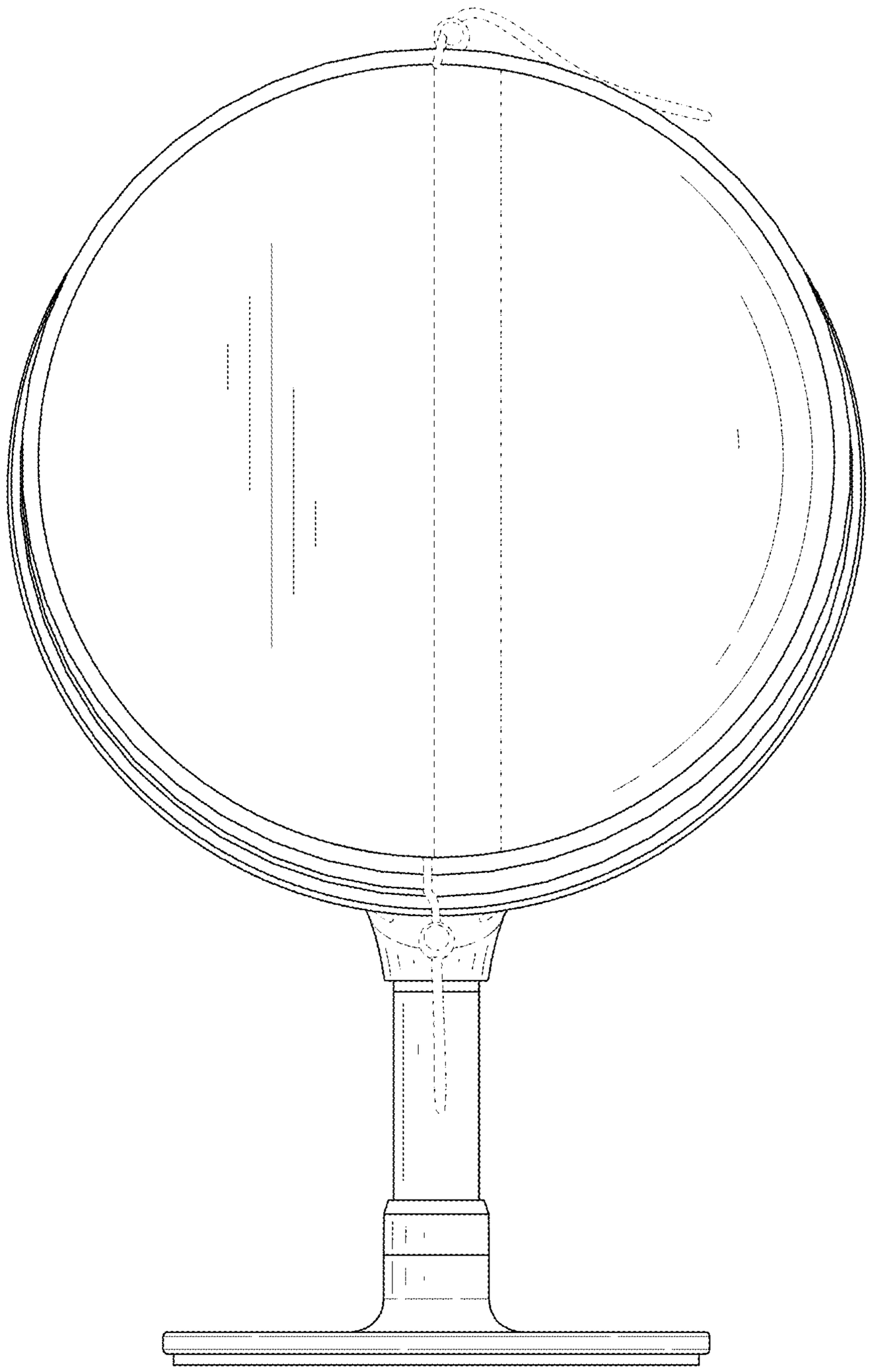

FIG. 4

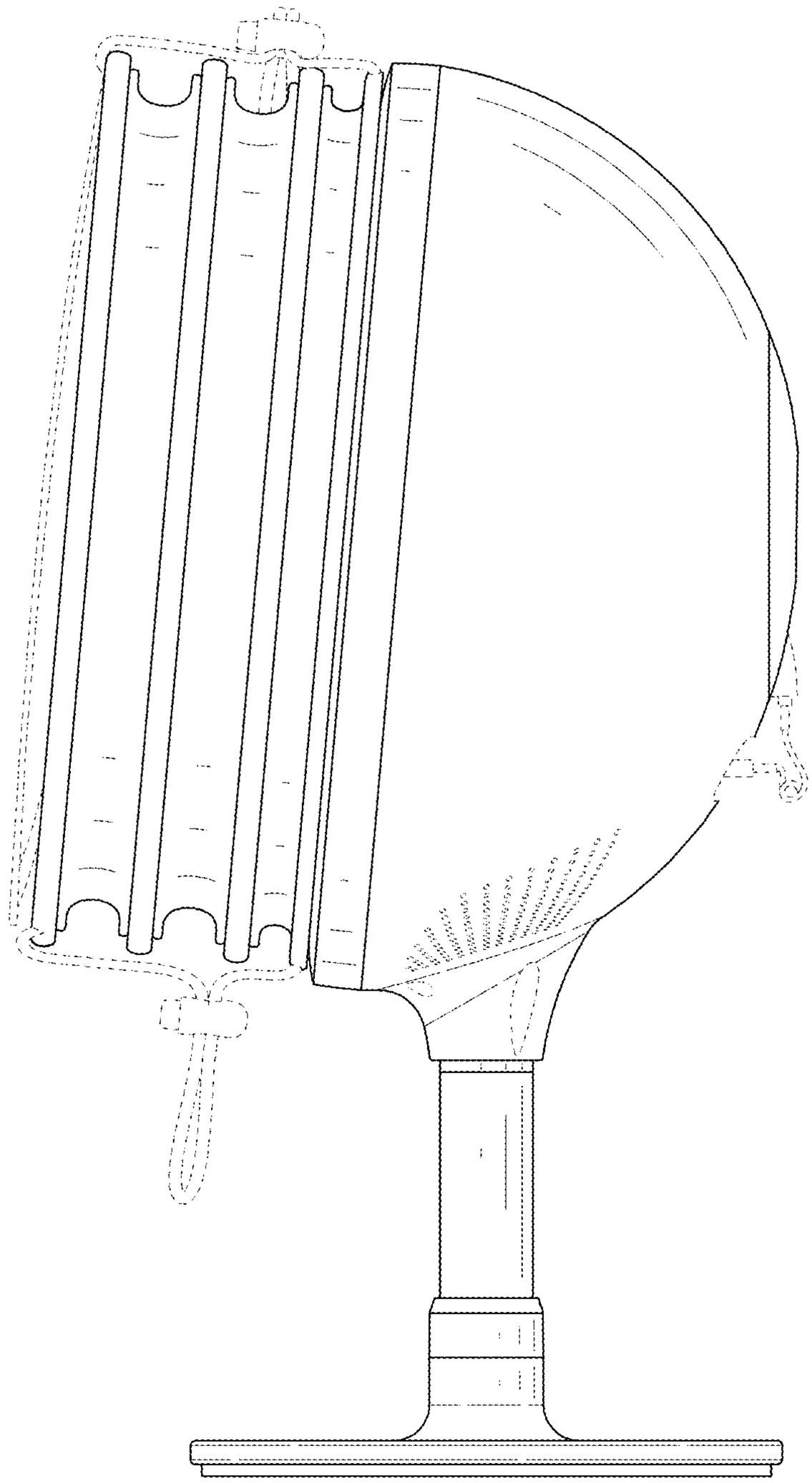

FIG. 5

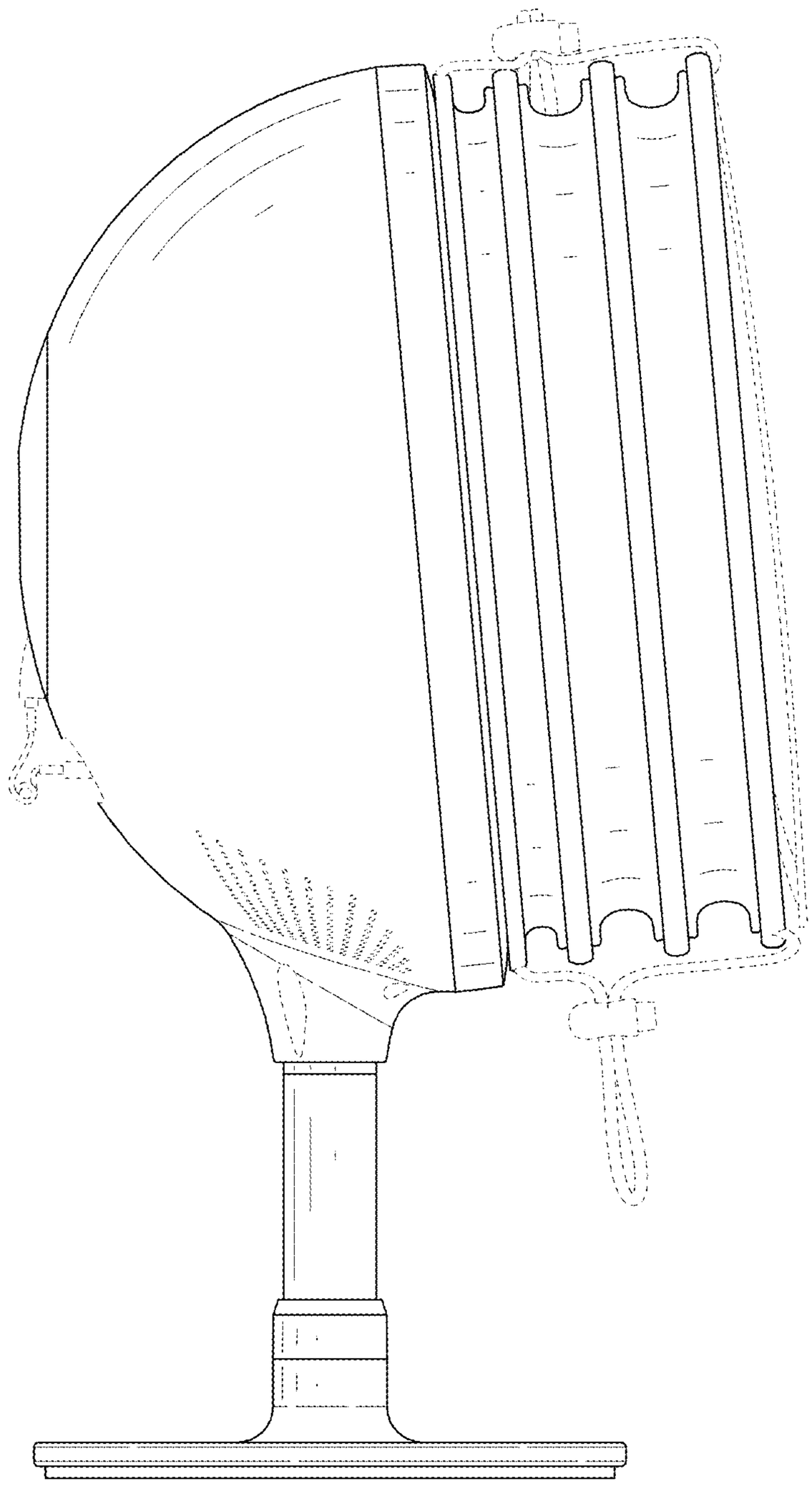

FIG. 6

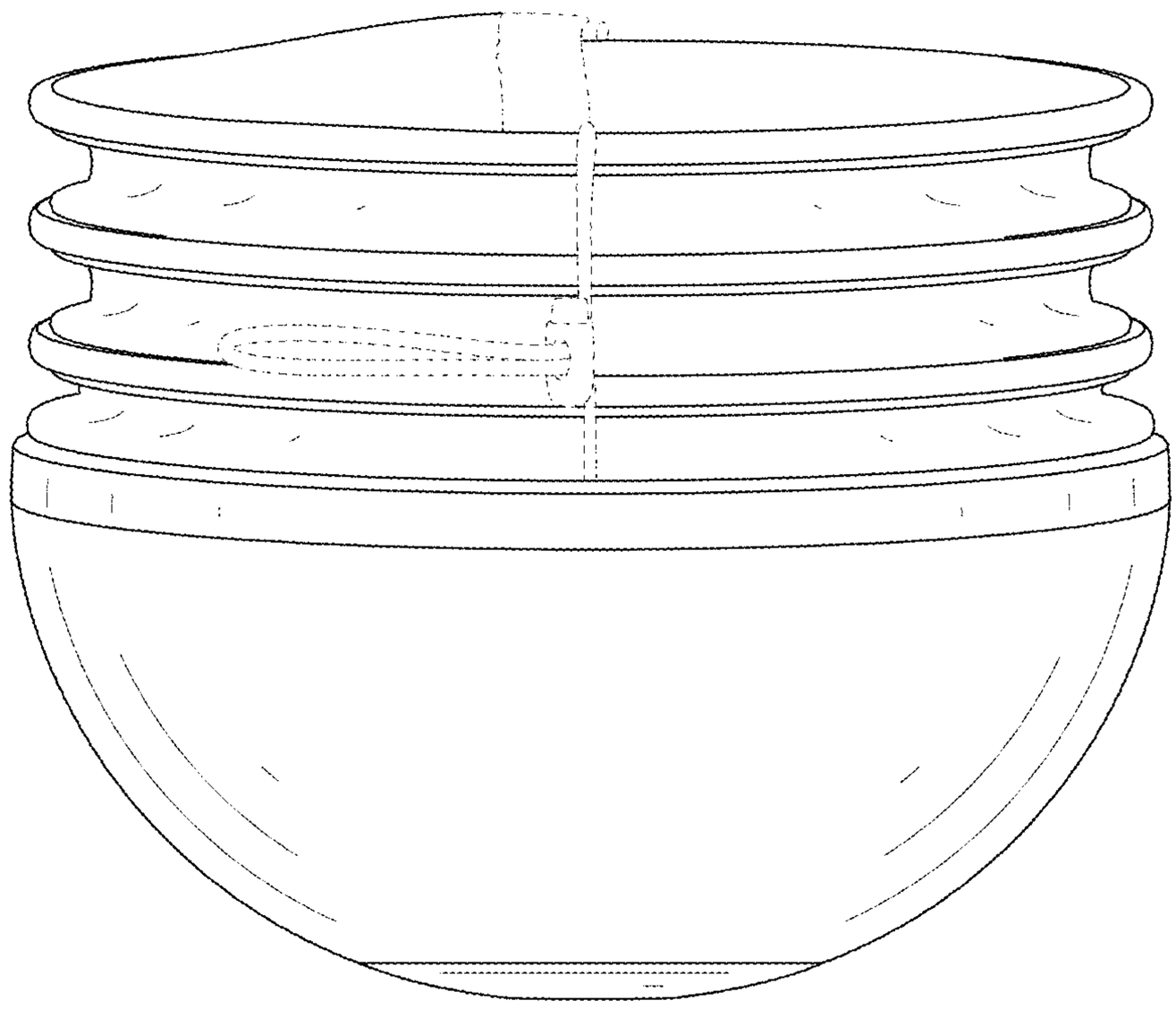

FIG. 7

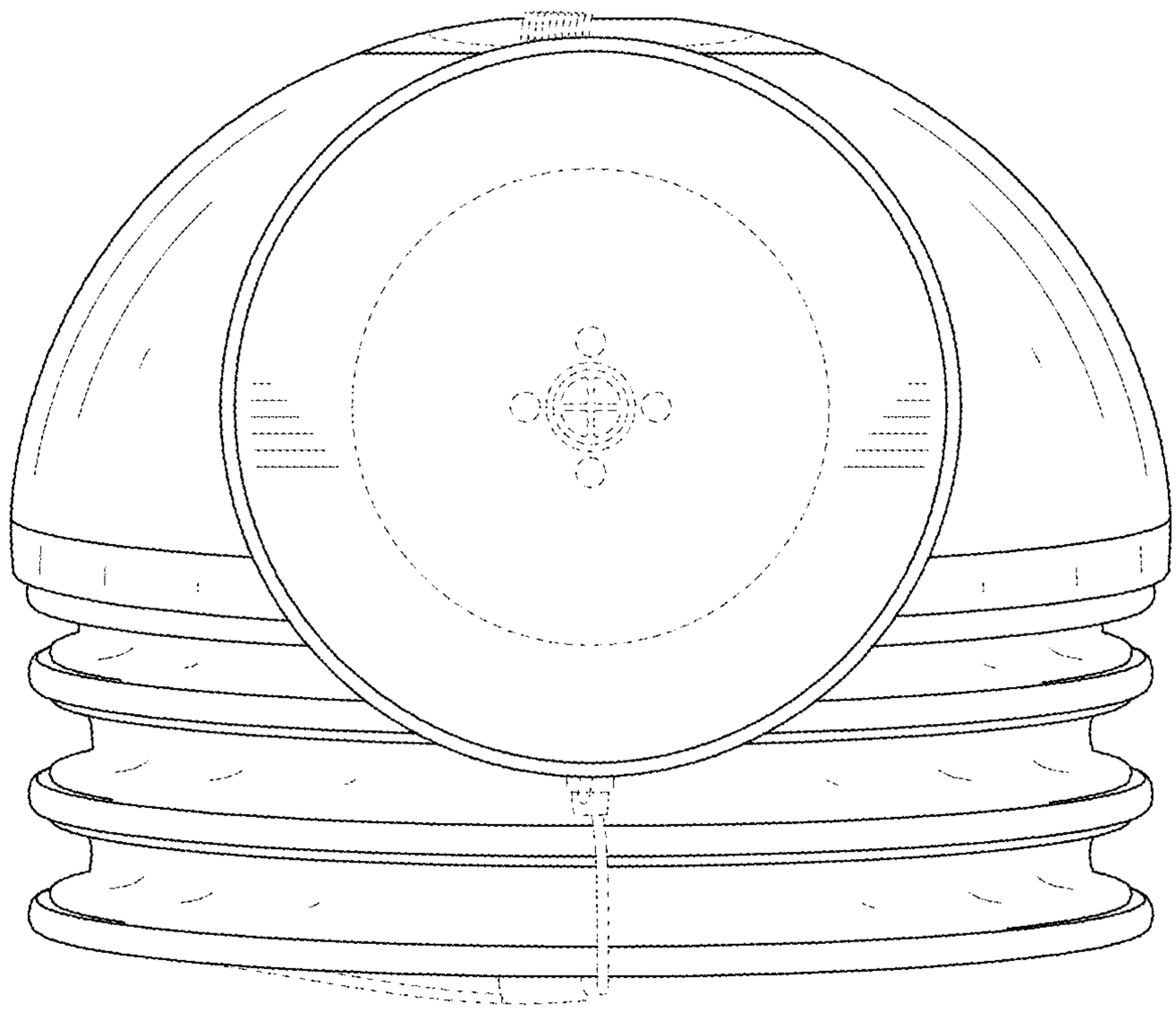

FIG. 8

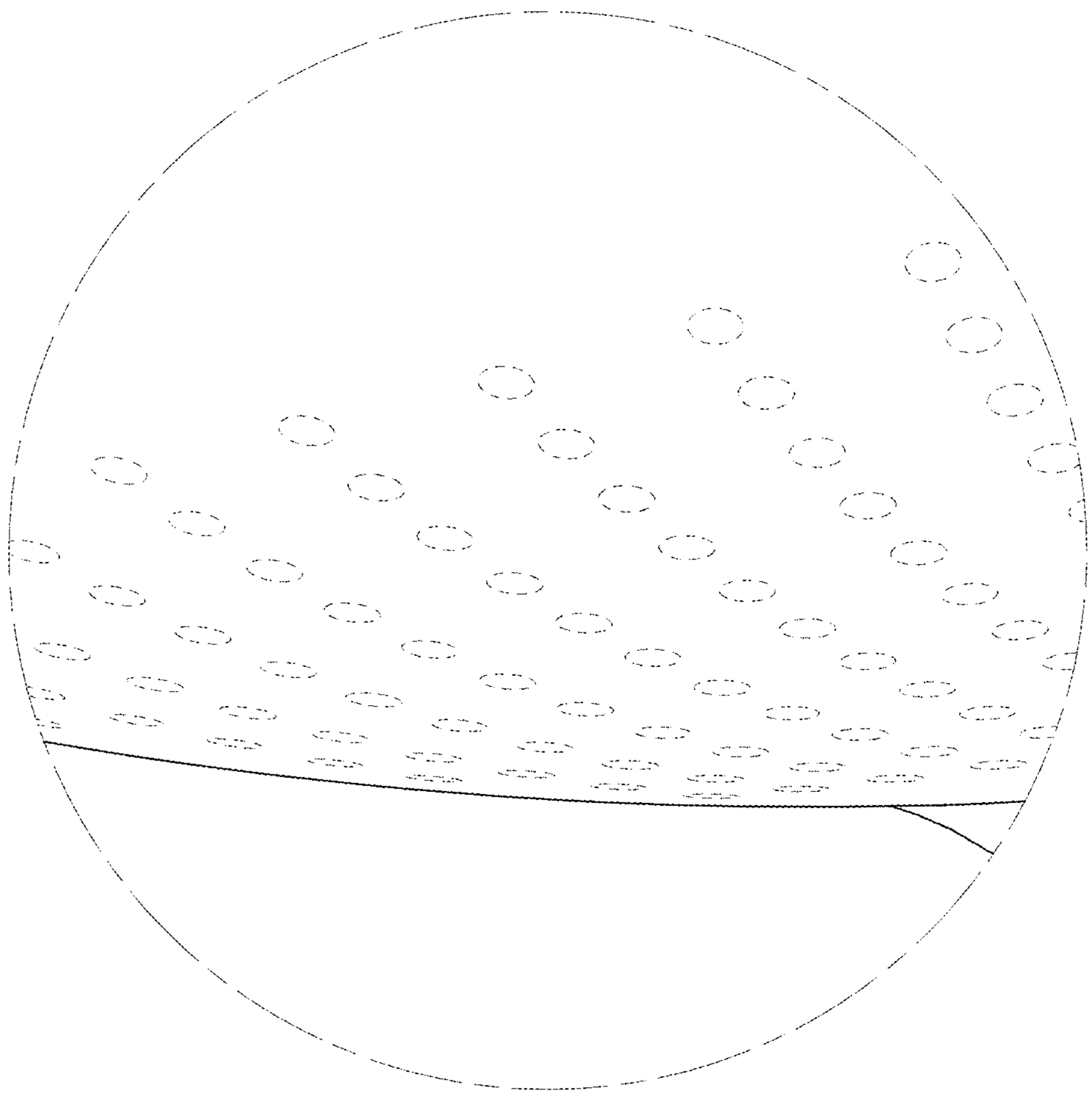

FIG. 9