US00D962950S

(12) **United States Design Patent**
Jones

(10) **Patent No.: US D962,950 S**
(45) **Date of Patent: ** Sep. 6, 2022**

(54) **COMBINED COVER AND BASE ASSEMBLY FOR A CONTROL PANEL FOR AN ACCESS CONTROL SYSTEM**

(71) Applicant: **ASSA ABLOY AB**, Stockholm (SE)

(72) Inventor: **William Jones**, Swansea (GB)

(73) Assignee: **ASSA ABLOY AB**, Stockholm (SE)

(**) Term: **15 Years**

(21) Appl. No.: **29/717,558**

(22) Filed: **Dec. 18, 2019**

(51) **LOC (13) Cl.** **14-02**

(52) **U.S. Cl.**
USPC **D14/441**; D10/106.1

(58) **Field of Classification Search**
USPC D14/167, 172, 204, 300–301, 348, D14/356–358, 363, 365, 367, 433–435, D14/435.1, 436–437, 441, 443, 480.1, D14/480.7, 484.1, 496; D13/103, D13/107–108, 110, 162–162.1, 168–169, D13/171; D18/11–12; D10/70, 104.1, D10/106.1, 106.5, 106.9, 106.95
(Continued)

(56) **References Cited**

U.S. PATENT DOCUMENTS

D364,398 S 11/1995 Lam
D373,349 S 9/1996 Millard
(Continued)

FOREIGN PATENT DOCUMENTS

CN 304945153 12/2018
CN 305347701 * 9/2019
(Continued)

OTHER PUBLICATIONS

CAS300M17BM2 Power Module, Cree, mouser.com, author unlisted, published Sep. 30, 2014 © 2021 Mouser Electronics, Inc., online, site visited Mar. 25, 2021. Available at URL: https://www.mouser.com/new/wolfspeed/cree-cas300m17bm2/ (Year: 2014).*
(Continued)

Primary Examiner — Holly E Thurman
Assistant Examiner — Altaira J Swangin
(74) *Attorney, Agent, or Firm* — Schwegman Lundberg & Woessner, P.A.

(57) **CLAIM**

The ornamental design for a combined cover and base assembly for a control panel for an access control system, as shown and described.

DESCRIPTION

FIG. **1** is a top-front-right isometric view of a combined cover and base assembly for a control panel for an access control system (e.g., a physical access control system (PACS)), showing my new design;
FIG. **2** is a bottom-front-right isometric view of the assembly of FIG. **1**;
FIG. **3** is a top-rear-left isometric view of the assembly of FIG. **1**;
FIG. **4** is a bottom-rear-left isometric view of the assembly of FIG. **1**;
FIG. **5** is a front view of the assembly of FIG. **1**;
FIG. **6** is a rear view of the assembly of FIG. **1**;
FIG. **7** is a left view of the assembly of FIG. **1**;
FIG. **8** is a right view of the assembly of FIG. **1**;
FIG. **9** is a top view of the assembly of FIG. **1**; and,
FIG. **10** is a bottom view of the assembly of FIG. **1**.
The broken lines of FIGS. **1** to **8** and **10** are provided for purposes of illustrating portions of the control panel for an access control system that form no part of the claimed design.

1 Claim, 10 Drawing Sheets

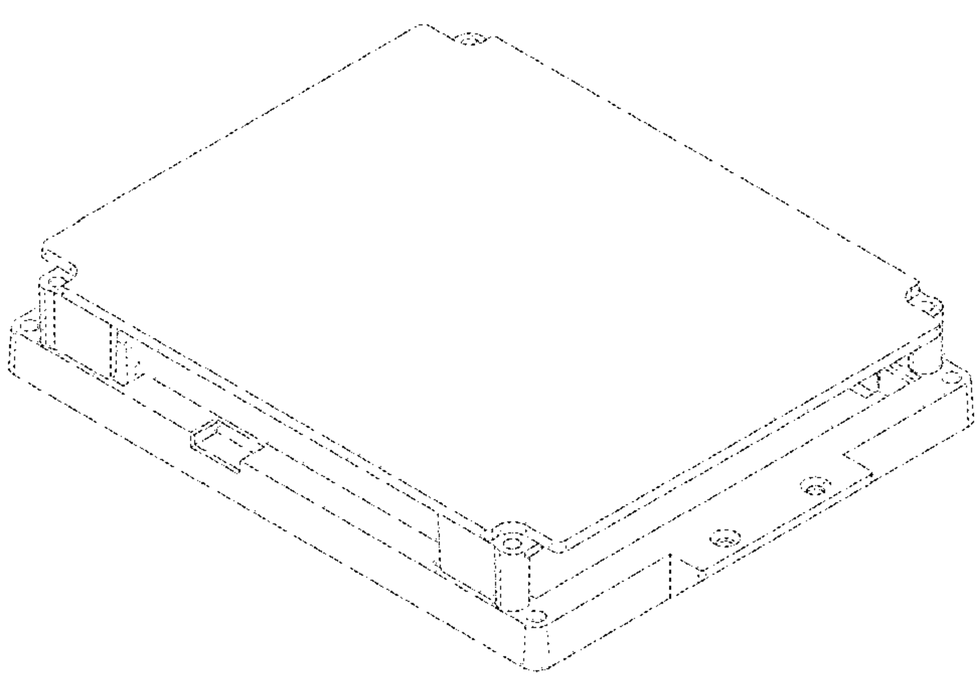

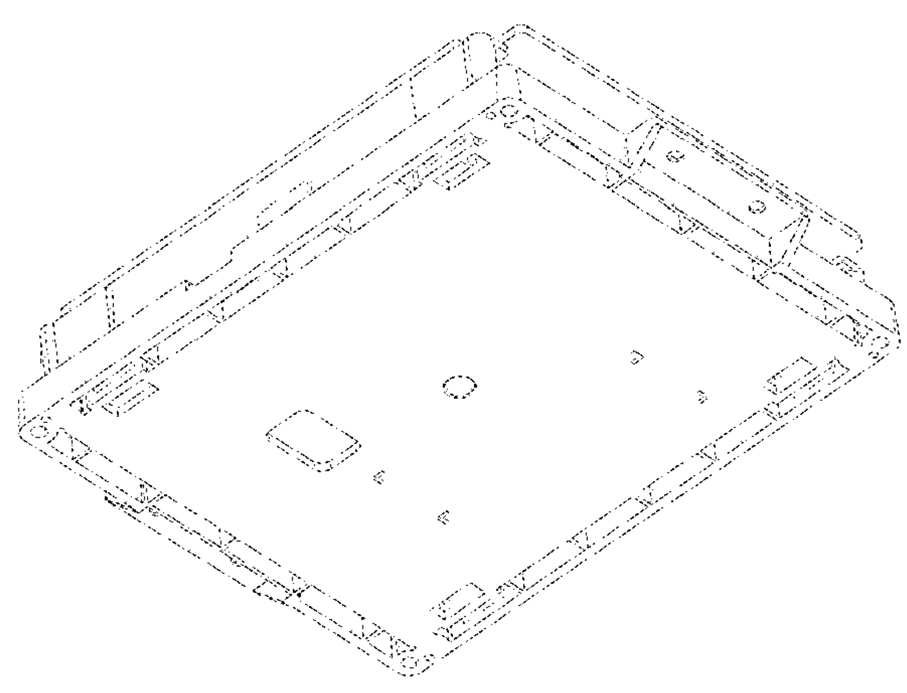

(58) **Field of Classification Search**
CPC .. H05K 5/0034; H05K 5/0039; H05K 5/0043; H05K 5/0047; H05K 7/1432; H04W 88/005; H04W 88/00; H02M 7/003
See application file for complete search history.

(56) **References Cited**

U.S. PATENT DOCUMENTS

D411,841	S		7/1999	Hoge et al.
6,058,081	A		5/2000	Schell et al.
6,213,812	B1		4/2001	Kan
D459,724	S		7/2002	Goto
D463,415	S		9/2002	Tomino et al.
D466,507	S		12/2002	Nakamura
D470,148	S		2/2003	Nishio et al.
D472,242	S		3/2003	Tomino
D499,731	S		12/2004	Fan
D504,662	S	*	5/2005	Person D13/110
D505,133	S		5/2005	Ashida et al.
D509,472	S		9/2005	Vinciarelli et al.
D510,324	S		10/2005	Lin et al.
D524,246	S		7/2006	Wang et al.
D556,686	S	*	12/2007	Matsuo D13/110
D558,684	S		1/2008	Dornauer et al.
D561,705	S	*	2/2008	Tsuduki D13/171
D565,573	S		4/2008	Alo et al.
D613,694	S		4/2010	Yu
D618,680	S		6/2010	Marchand et al.
D626,075	S		10/2010	Truskett et al.
7,817,406	B2	*	10/2010	Bremicker H05K 7/1432 361/679.01
D632,695	S		2/2011	Berntsen
D639,753	S		6/2011	Saari
D654,066	S		2/2012	Yi et al.
D670,186	S	*	11/2012	Aesch, Jr. D10/104.1
D673,114	S	*	12/2012	Schnakenberg, III D13/110
D699,669	S		2/2014	Kasaba et al.
D728,395	S	*	5/2015	Roberts D10/70
D729,249	S		5/2015	Sun et al.
9,099,163	B1		8/2015	Casey et al.
D742,314	S		11/2015	Nishikawa
D753,604	S		4/2016	Druscovich et al.
D766,161	S		9/2016	Barassi et al.
9,464,452	B2	*	10/2016	Higgs E04H 12/2269
D773,469	S		12/2016	Ellis, II
9,559,508	B2		1/2017	Shepard et al.
9,603,291	B2	*	3/2017	Soyano H05K 9/0022
9,698,507	B2		7/2017	Chang et al.
D794,030	S	*	8/2017	Kim D14/435
D794,031	S	*	8/2017	You D14/435
D794,032	S	*	8/2017	You D14/435
D794,033	S		8/2017	Park et al.
9,747,738	B1		8/2017	Wendling et al.
9,795,049	B2		10/2017	Tada et al.
D804,484	S		12/2017	Kim et al.
D804,485	S		12/2017	Yang et al.
D813,807	S		3/2018	Spiegel
D853,961	S	*	7/2019	Kanarellis D13/110
10,411,420	B2	*	9/2019	Lokesh H02G 3/16
D869,301	S	*	12/2019	Komoni D10/70
10,574,150	B2	*	2/2020	Yamanaka H01R 9/2425
D910,582	S		2/2021	Migliorino et al.
10,958,127	B2	*	3/2021	Tramet B60R 16/0239
D919,628	S		5/2021	Ma
D924,938	S		7/2021	Lörner
D946,571	S	*	3/2022	Garipov D14/358
D947,185	S	*	3/2022	Imaizumi D10/46
11,290,000	B2		3/2022	Nygren et al.
2005/0102889	A1	*	5/2005	Hoyes A01M 1/026 43/114
2007/0252170	A1		11/2007	Lin et al.
2008/0302643	A1	*	12/2008	Victor H02M 7/003 200/331
2012/0223974	A1	*	9/2012	Chang B60Q 3/16 345/690
2014/0094050	A1		4/2014	Yamanaka et al.
2016/0254606	A1		9/2016	Hu et al.
2017/0127540	A1	*	5/2017	You H05K 1/181
2019/0014681	A1	*	1/2019	Jang H05K 7/1432
2019/0200475	A1	*	6/2019	Tramet H05K 5/0247
2019/0304872	A1	*	10/2019	Onaga H05K 7/1432
2022/0022335	A1		1/2022	Takagi

FOREIGN PATENT DOCUMENTS

CN	305801890	*	5/2020
CN	306266032	*	1/2021
CN	306266056	*	1/2021
CN	306289437		1/2021
CN	306336359		2/2021
KR	300375170 B1		3/2005

OTHER PUBLICATIONS

U.S. Appl. No. 29/717,559, filed Dec. 18, 2019, Control Panel for Access Control System.

U.S. Appl. No. 29/717,560, filed Dec. 18, 2019, Control Panel for Access Control System.

"HID Access Controllers", HID Global, [Online] Retrieved from the Internet: <URL: https://www.hidglobal.com/products/controllers>, (Retrieved Jan. 10, 2020), 3 pgs.

"HID pivCLASS Authentication Module", HID Global, [Online] Retrieved from the Internet: <URL: https://www.hidglobal.com/products/controllers/pivclass/pivclass-authentication-module>, (Retrieved Jan. 10, 2020), 4 pgs.

"HID VertX EVO Access Controllers", HID Global, [Online] Retrieved from the Internet: <URL: https://www.hidglobal.com/products/controllers/vertx-evo>, (Retrieved Jan. 10, 2020), 3 pgs.

"HID VertX EVO V1000 Networked Controller", HID Global, [Online] Retrieved from the Internet: <URL: https://www.hidglobal.com/products/controllers/vertx-evo/v10000>, (Retrieved Jan. 10, 2020), 2 pgs.

"HID VertX V200 Input Monitor Interface", HID Global, [Online] Retrieved from the Internet: <URL: https://www.hidglobal.com/products/controllers/vertx/v200>, (Retrieved Jan. 10, 2020), 4 pgs.

"HID VertX V300 Output Control Interface", HID Global, [Online] Retrieved from the Internet: <URL: https://www.hidglobal.com/products/controllers/vertx/v300>, (Retrieved Jan. 10, 2020), 4 pgs.

"Personal Identity Verification (PIV) Enablement Solutions—pivCLASS", HID Global, [Online] Retrieved from the Internet: <URL: https://www.hidglobal.com/sites/default/files/resource_files/pivclass-solutions-br-en.pdf >, (2016), 8 pgs.

"PivCLASS Authentication Module with Reader Services", HID Global, [Online] Retrieved from the Internet: <URL: https://www.hidglobal.com/sites/default/files/resource_files/pivclass-authentication-module-ds-en.pdf >, (2017), 2 pgs.

"PivCLASS Installation Overview Guide", HID Global, [Online] Retrieved from the Internet: <URL: https://www.hidglobal.com/doclib/files/resource_files/plt-02750_pivclass_installation_overview.pdf>, (Mar. 2019), 40 pgs.

"V2000 Install Wiring Diagram Example", HID Global, [Online] Retrieved from the Internet: <URL: https://www.hidglobal.com/doclib/files/resource_files/72000-902_a.4_v2000_evo_wiring_example.pdf >, (Retrieved Jan. 7, 2020), 1 pg.

"V2000 Reader Interface / Network Controller", HID Global, [Online] Retrieved from the Internet: <URL: https://www.hidglobal.com/sites/default/files/resource_files/vertx-evo-v2000-ctrlr-ds-en.pdf >, (2016), 2 pgs.

"Vertex EVO V2000 Installation Guide", HID Global, [Online] Retrieved from the Internet: <URL: https://www.hidglobal.com/doclib/files/resource_files/72000-901_a.5_vertx_evo_v2000_inst_guide_en.pdf >, (Jul. 2016), 22 pgs.

"VertX 71000-902 Install Wiring Diagram Example", HID Global, [Online] Retrieved from the Internet: <URL: https://www.hidglobal.com/doclib/files/resource_files/71000-902_a.5_v1000_evo_wiring_example_minus_modem.pdf>, (Retrieved Jan. 7, 2020), 1 pg.

"VertX Access Controllers", HID Global, [Online] Retrieved from the Internet: <URL: https://www.hidglobal.com/products/controllers/vertx>, (Retrieved Jan. 10, 2020), 3 pgs.

(56) **References Cited**

OTHER PUBLICATIONS

"VertX EVO V1000 Installation Guide", HID Global, [Online] Retrieved from the Internet: <URL: https://www.hidglobal.com/sites/default/files/resource_files/71000-901_a.4_vertx_evo_v1000_inst_guide_en.pdf>, (Jul. 2016), 25 pgs.
"VertX V100 Door/ Reader Interface", HID Global, [Online] Retrieved from the Internet: <URL: https://www.hidglobal.com/sites/default/files/resource_files/vertx-v100-controller-ds-en.pdf>, (2016), 2 pgs.
"VertX V100, V200 and V300 Installation Guide", HID Global, [Online] Retrieved from the Internet: <URL: https://www.hidglobal.com/doclib/files/vertx-vx00-install-ins-en.pdf >, (Nov. 2011), 10 pgs.
"Access Control Manager Embedded Controller", Avigilon, youtube.com, [Online] Retrieved from the Internet: <URL: https://www.youtube.com/watch?v=igJMi7nd_II>, [Retrieved on Mar. 25, 2021], (Jun. 7, 2016), 5 pgs.
"U.S. Appl. No. 29/717,559, Non Final Office Action dated Aug. 16, 2021", 12 pgs.
"Four Door Access Control Panel", Granding, GlobalSources.com, Publishers Representatives Limited, [Online] Retrieved from the Internet: <URL: https://www.globalsources.com/Access-control/Access-Control-Panel-door system-1167495092p.htm#1167495092> [Retrieved on: Mar. 25, 2021], (2021), 8 pgs.
"U.S. Appl. No. 29/717,559, Response filed Mar. 23, 2022 to Final Office Action dated Feb. 10, 2022", 4 pgs.
"U.S. Appl. No. 29/717,559, Examiner Interview Summary dated Apr. 5, 2022", 3 pgs.
"U.S. Appl. No. 29/717,559, Notice of Allowance dated May 5, 2022", 8 pgs.
"U.S. Appl. No. 29/717,560, Non Final Office Action dated May 13, 2022", 16 pgs.

* cited by examiner

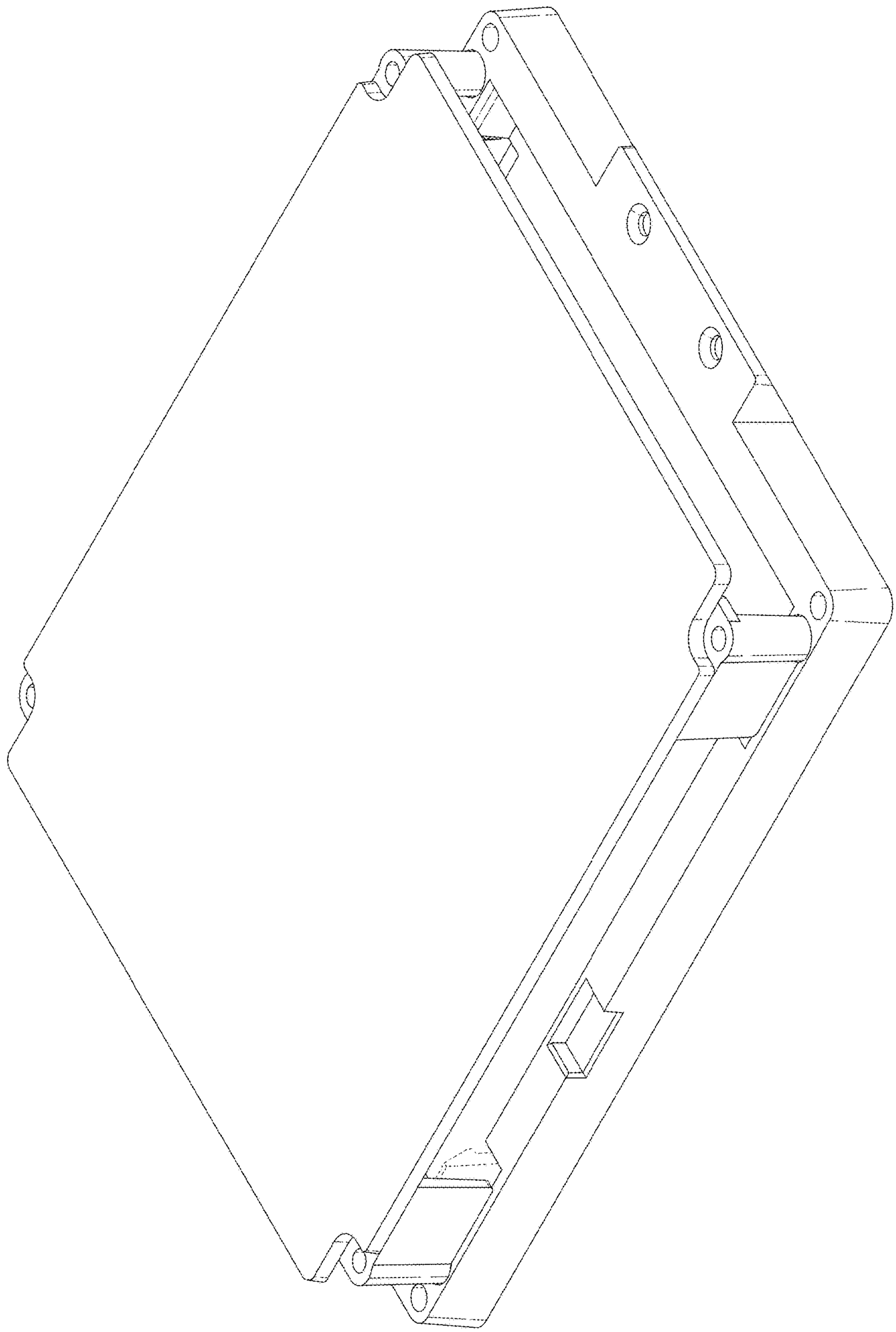

FIG. 1

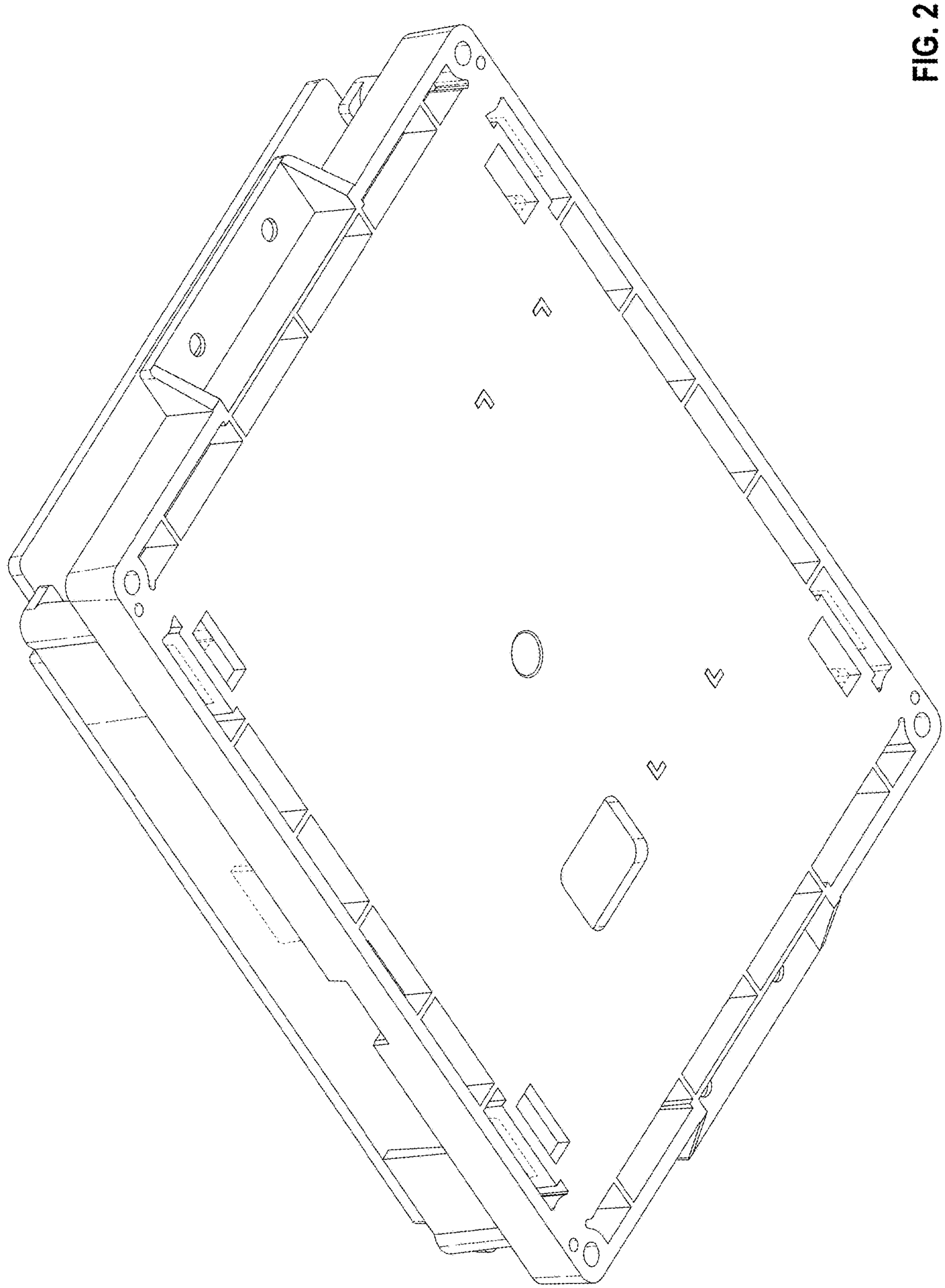

FIG. 2

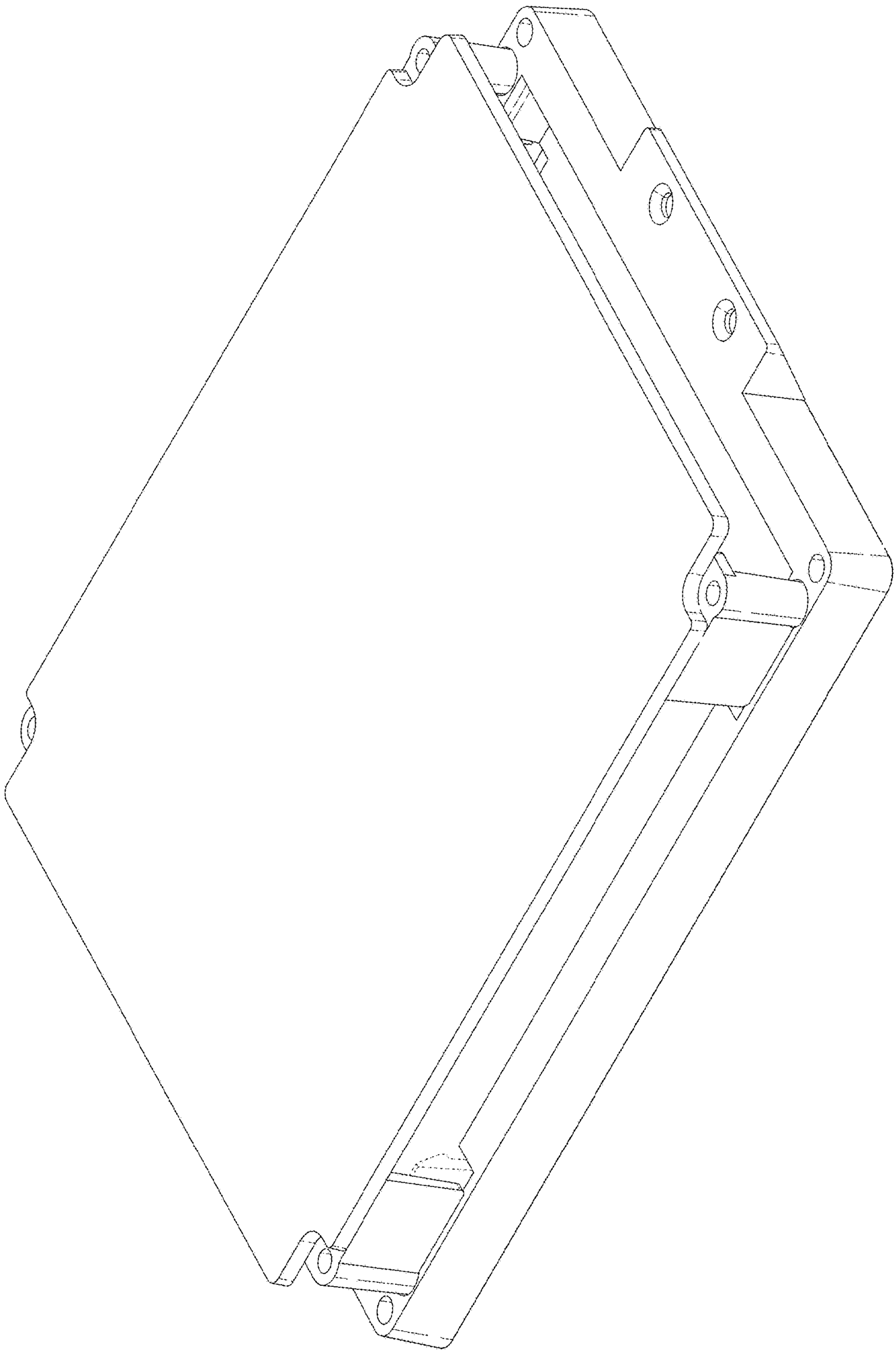

FIG. 3

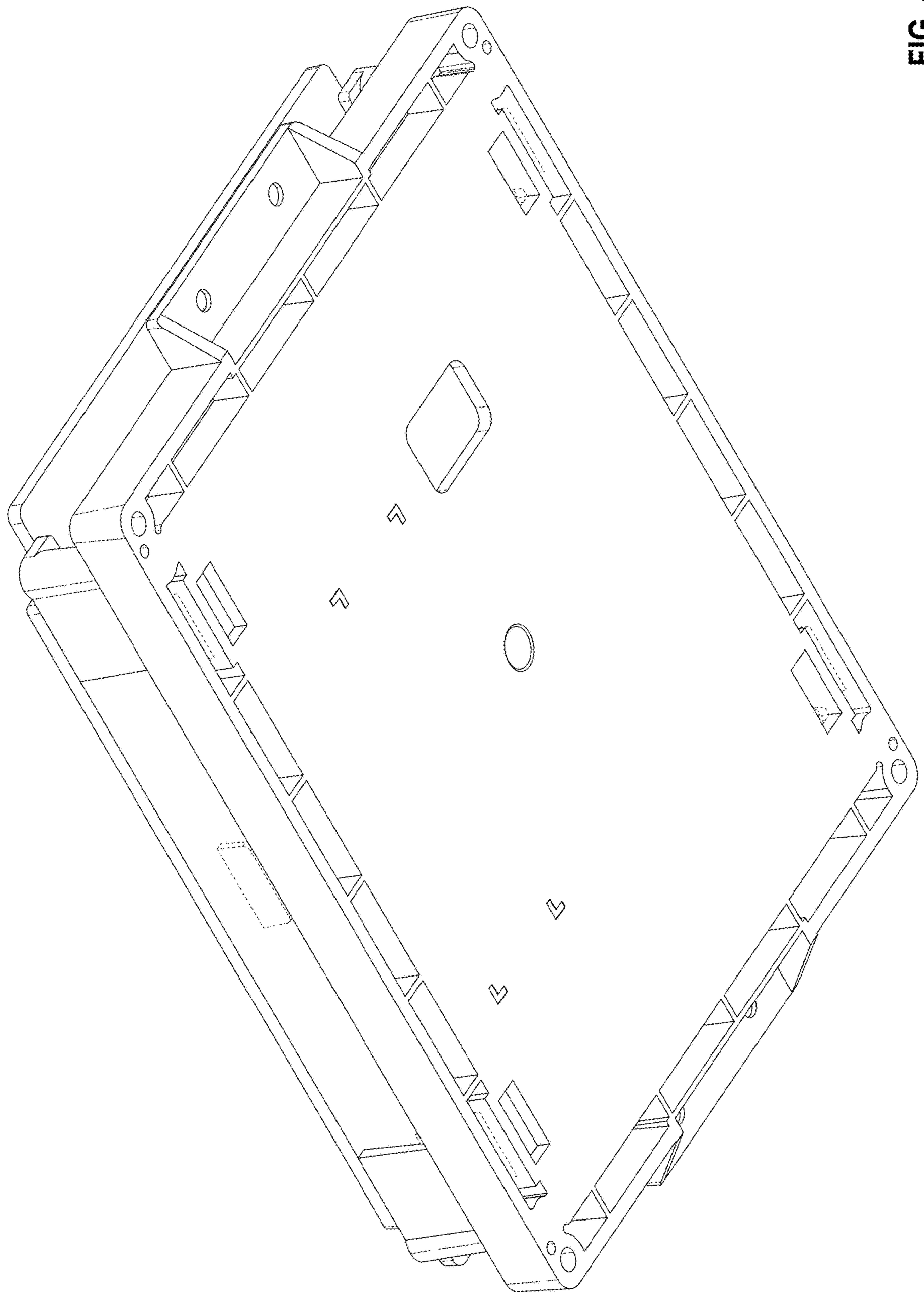

FIG. 4

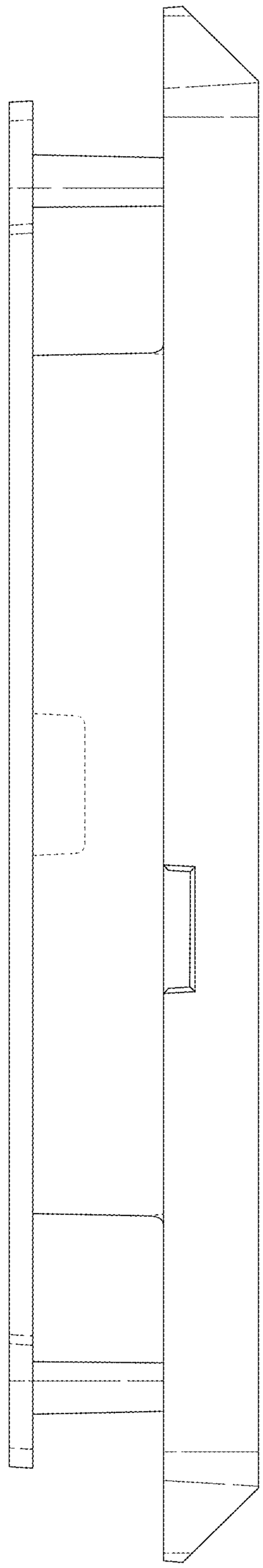

FIG. 5

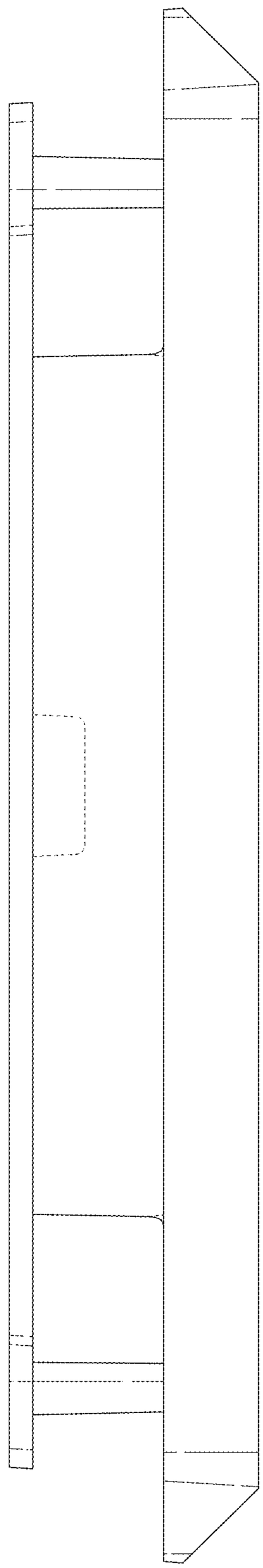

FIG. 6

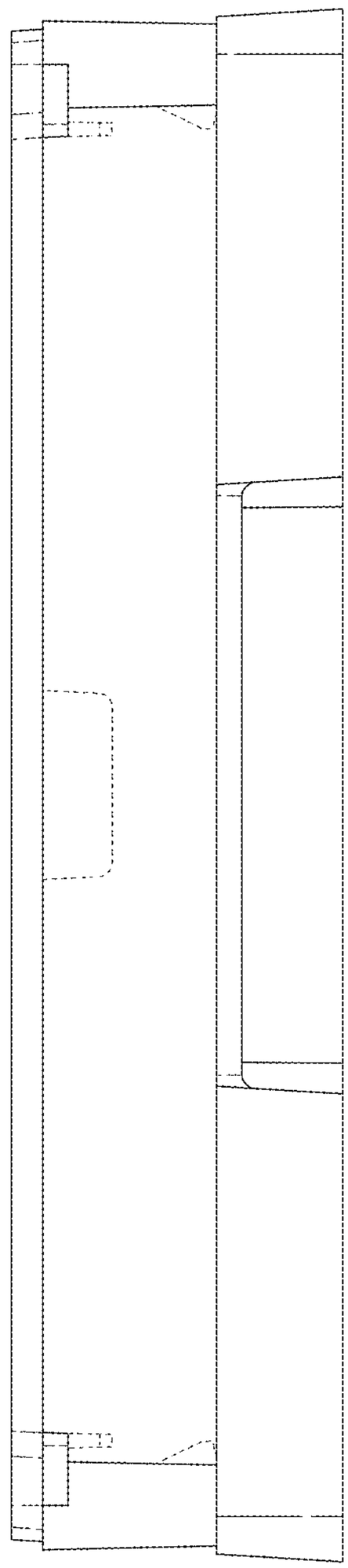

FIG. 7

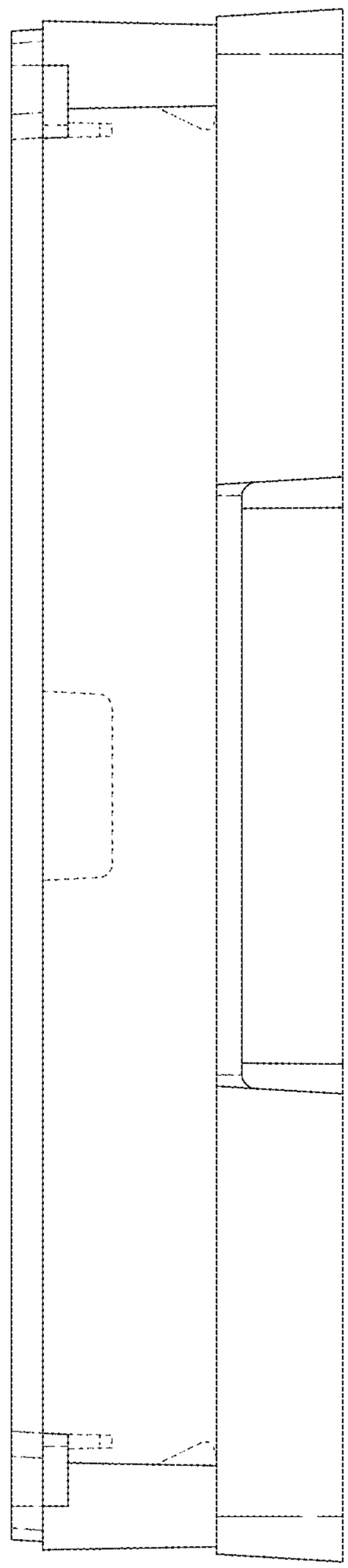

FIG. 8

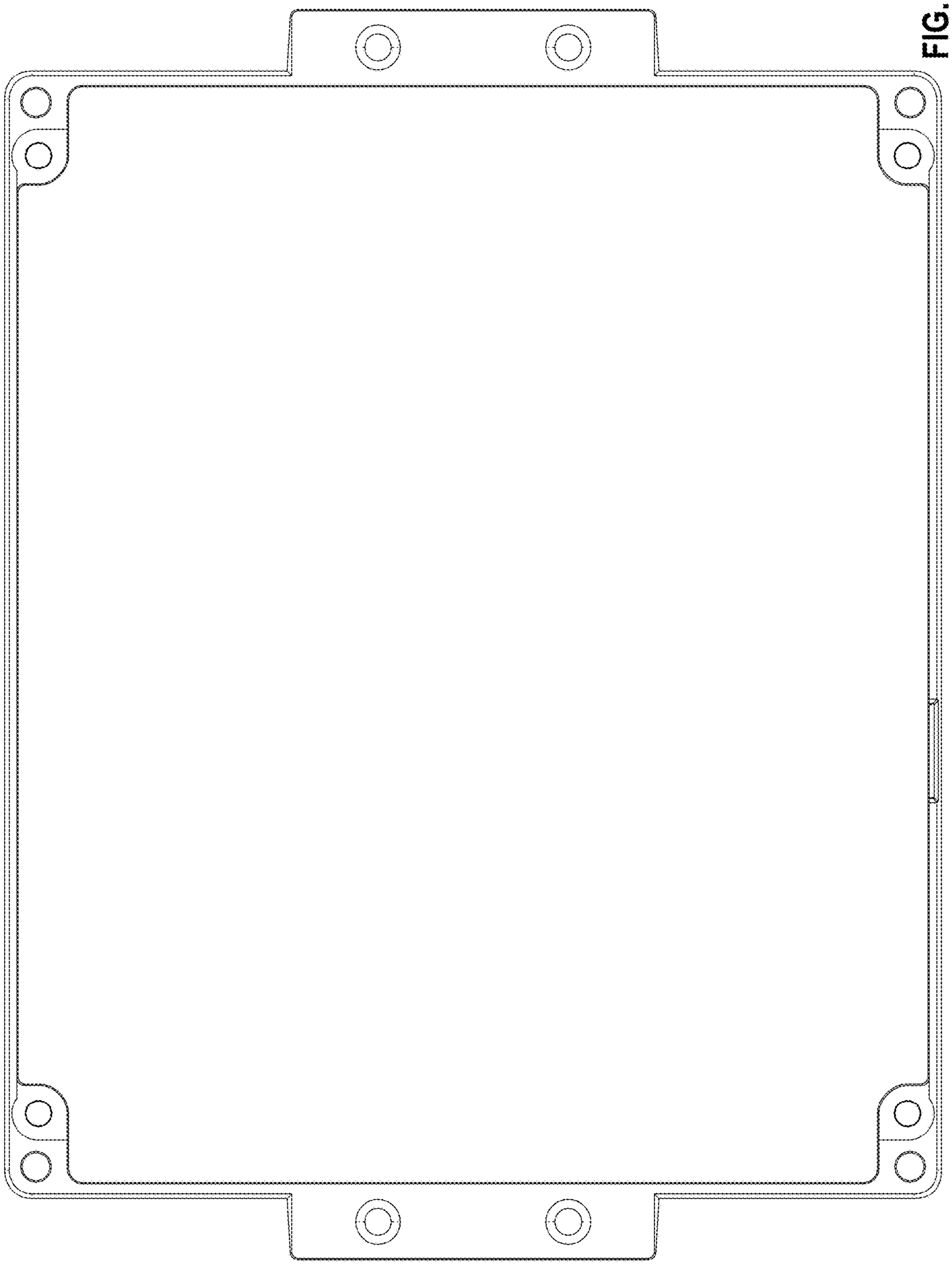

FIG. 9

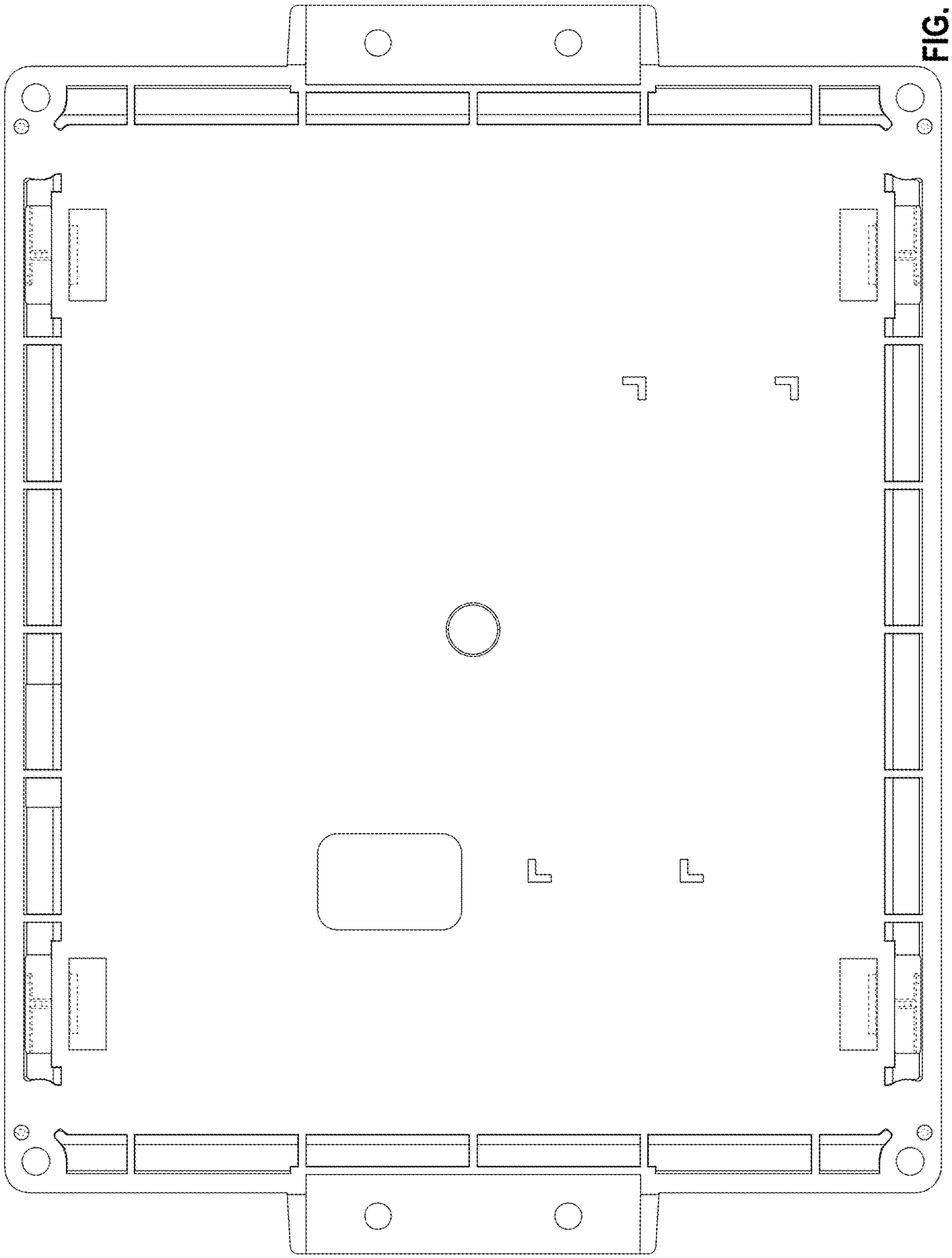

FIG. 10