US00D962564S

# (12) United States Design Patent

Son et al.

(10) Patent No.: US D962,564 S
(45) Date of Patent: ** Aug. 30, 2022

(54) **DOOR FOR ELECTRONIC WASHING AND DRYING MACHINE**

(71) Applicant: **LG ELECTRONICS INC.**, Seoul (KR)

(72) Inventors: **Nerry Son**, Seoul (KR); **Sojin Park**, Seoul (KR); **Junghwan Lee**, Seoul (KR); **Eunyoung Chee**, Seoul (KR); **Hyewon Kim**, Seoul (KR)

(73) Assignee: **LG ELECTRONICS INC.**, Seoul (KR)

(**) Term: **15 Years**

(21) Appl. No.: **29/728,779**

(22) Filed: **Mar. 20, 2020**

(30) **Foreign Application Priority Data**

Sep. 20, 2019 (KR) ..... 30-2019-0045245

(51) **LOC (13) Cl.** ..... **15-05**

(52) **U.S. Cl.**
USPC ..... **D32/6**

(58) **Field of Classification Search**
USPC ..... D32/6, 25, 28, 59
CPC ..... D06F 39/14; D06F 37/26; D06F 23/02; D06F 39/088
See application file for complete search history.

(56) **References Cited**

U.S. PATENT DOCUMENTS

D479,373 S * 9/2003 Silva ..... D32/25
D582,107 S * 12/2008 Ha ..... D32/6
D619,313 S * 7/2010 Cline ..... D32/25
D627,115 S * 11/2010 Jeon ..... D32/6
D630,807 S * 1/2011 Song ..... D32/6
D631,623 S * 1/2011 Chung ..... D32/6
D633,262 S * 2/2011 Jeon ..... D32/6
D634,492 S * 3/2011 Chung ..... D32/6
D635,313 S * 3/2011 Jeon ..... D32/6
D649,722 S * 11/2011 Chung ..... D32/6
D689,655 S * 9/2013 Chung ..... D32/25
D695,977 S * 12/2013 Glassman ..... D32/6
D703,886 S * 4/2014 Ha ..... D32/6
D746,006 S * 12/2015 Ha ..... D32/25
(Continued)

OTHER PUBLICATIONS

YankoDesign https://www.yankodesign.com/2020/04/16/this-front-load-washing-machines-door-slides-inwards-to-save-space-in-small-homes/ (Year: 2021).*

*Primary Examiner* — Michelle E. Wilson
*Assistant Examiner* — Richard E Yenchesky
(74) *Attorney, Agent, or Firm* — Birch, Stewart, Kolasch & Birch, LLP

(57) **CLAIM**

The ornamental design for a door for electronic washing and drying machine, as shown and described.

**DESCRIPTION**

FIG. **1** is a front perspective view of the door for electronic washing and drying machine showing our new design;
FIG. **2** is a front view thereof;
FIG. **3** is a rear view thereof;
FIG. **4** is a left side view thereof;
FIG. **5** is a right side view thereof;
FIG. **6** is a top plan view thereof;
FIG. **7** is a bottom plan view thereof;
FIG. **8** is a perspective view, with the control panel shown in use; and,
FIG. **9** is a perspective view, with the control panel shown in use.
The portions of FIGS. **8** and **9** drawn in broken lines show environmental structure only and form no part of the claimed design.

**1 Claim, 9 Drawing Sheets**

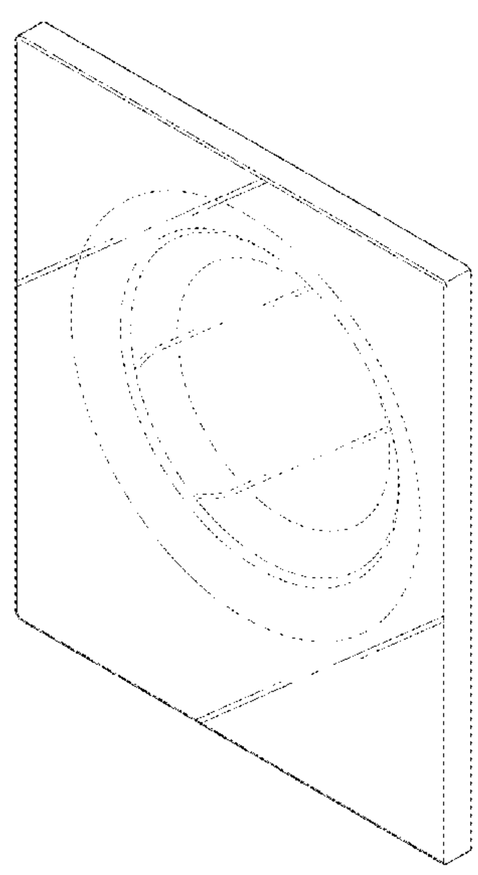

(56) **References Cited**

U.S. PATENT DOCUMENTS

| | | | | | |
|---|---|---|---|---|---|
| D759,326 | S * | 6/2016 | Jeon | D32/25 | |
| D760,456 | S * | 6/2016 | Jeon | D32/25 | |
| D831,917 | S * | 10/2018 | Ha | D32/25 | |
| D935,722 | S * | 11/2021 | Kang | D32/59 | |
| 2014/0090427 | A1* | 4/2014 | Hwang | D06F 39/088 | 68/12.14 |
| 2015/0096128 | A1* | 4/2015 | Sawford | D06F 23/02 | 68/17 R |
| 2015/0233039 | A1* | 8/2015 | Cho | D06F 37/26 | 312/228 |
| 2015/0233042 | A1* | 8/2015 | Kang | D06F 39/14 | 312/228 |

* cited by examiner

FIG. 1

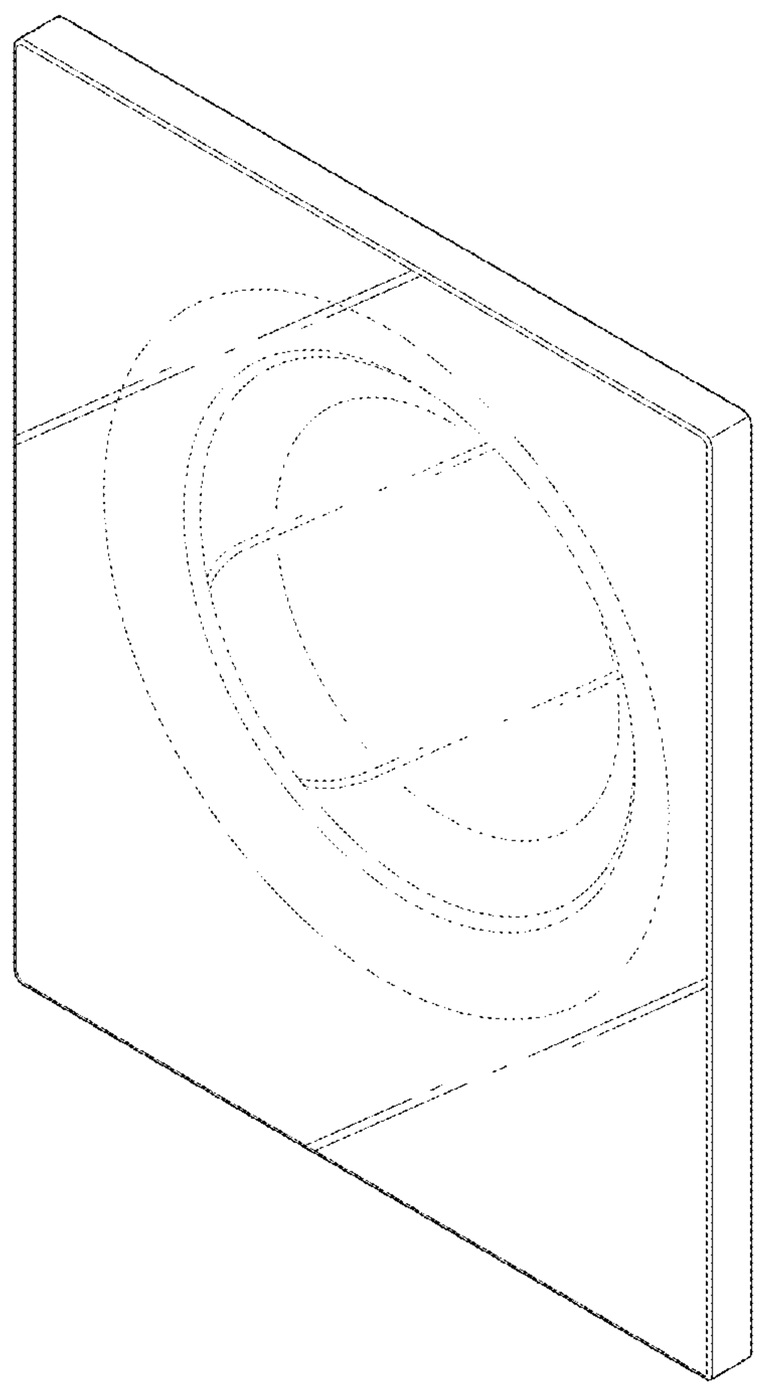

FIG. 2

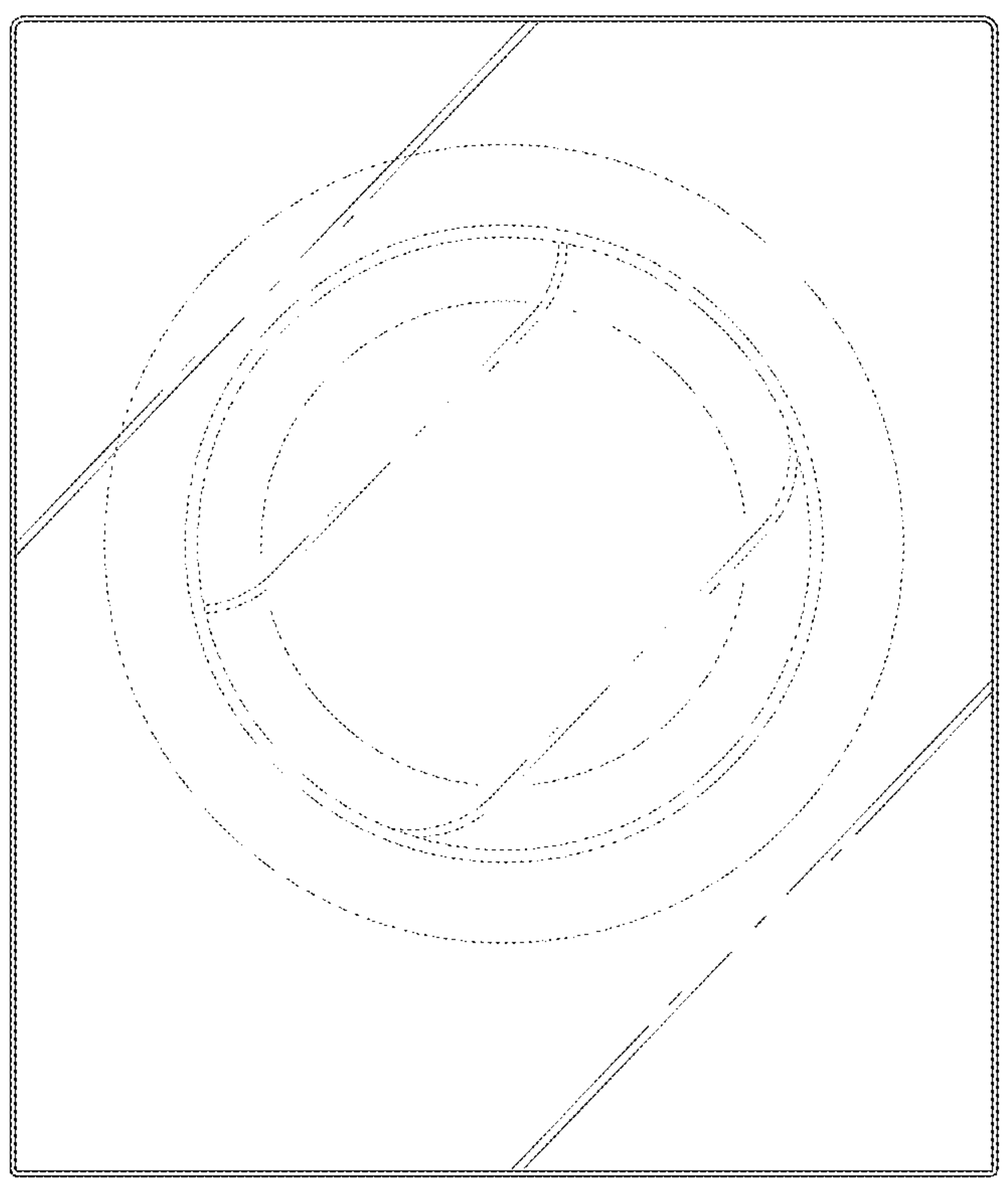

FIG. 3

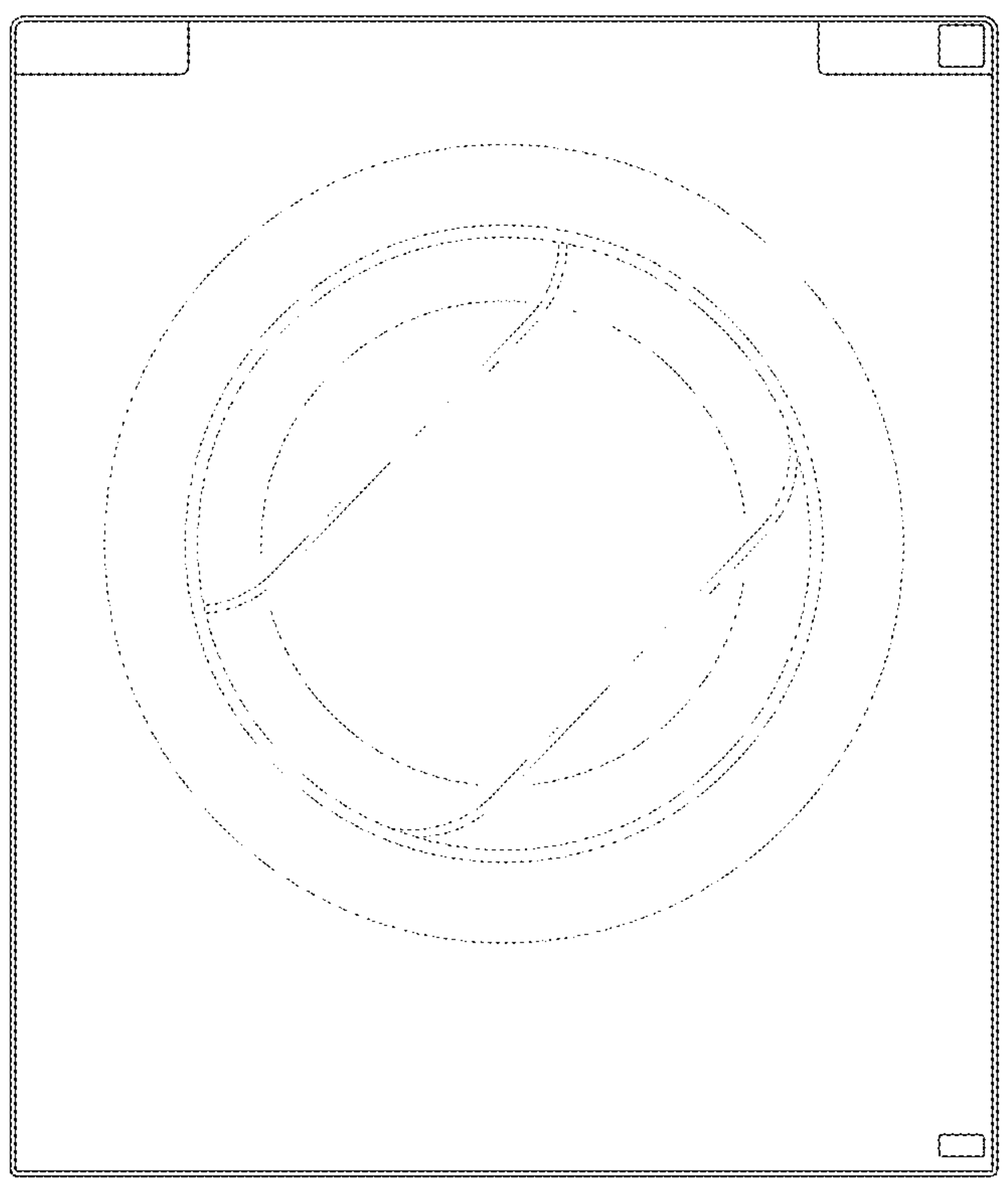

FIG. 4

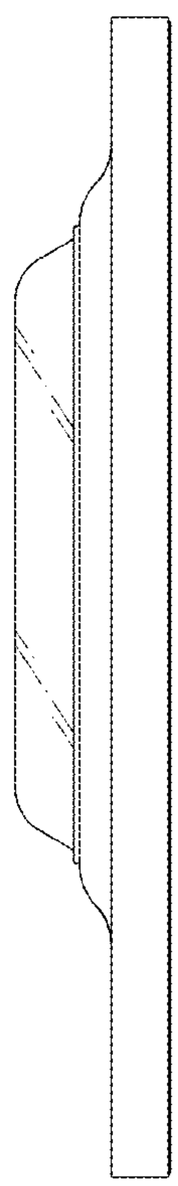

FIG. 5

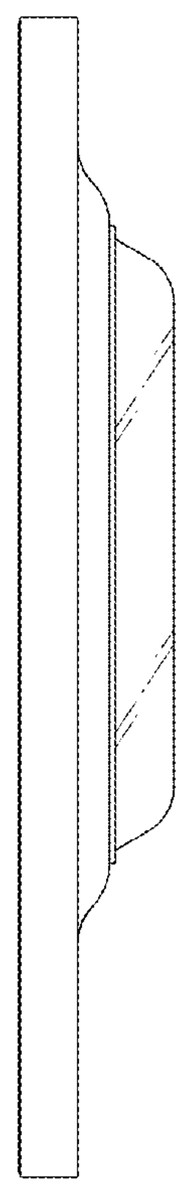

FIG. 6

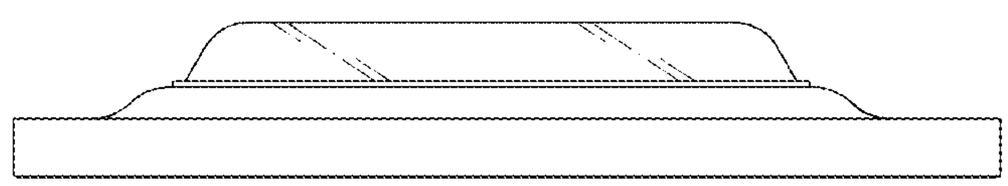

FIG. 7

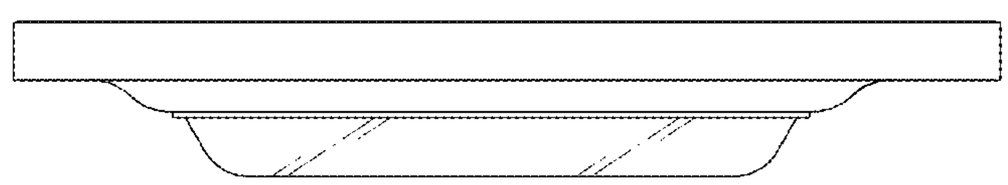

FIG. 8

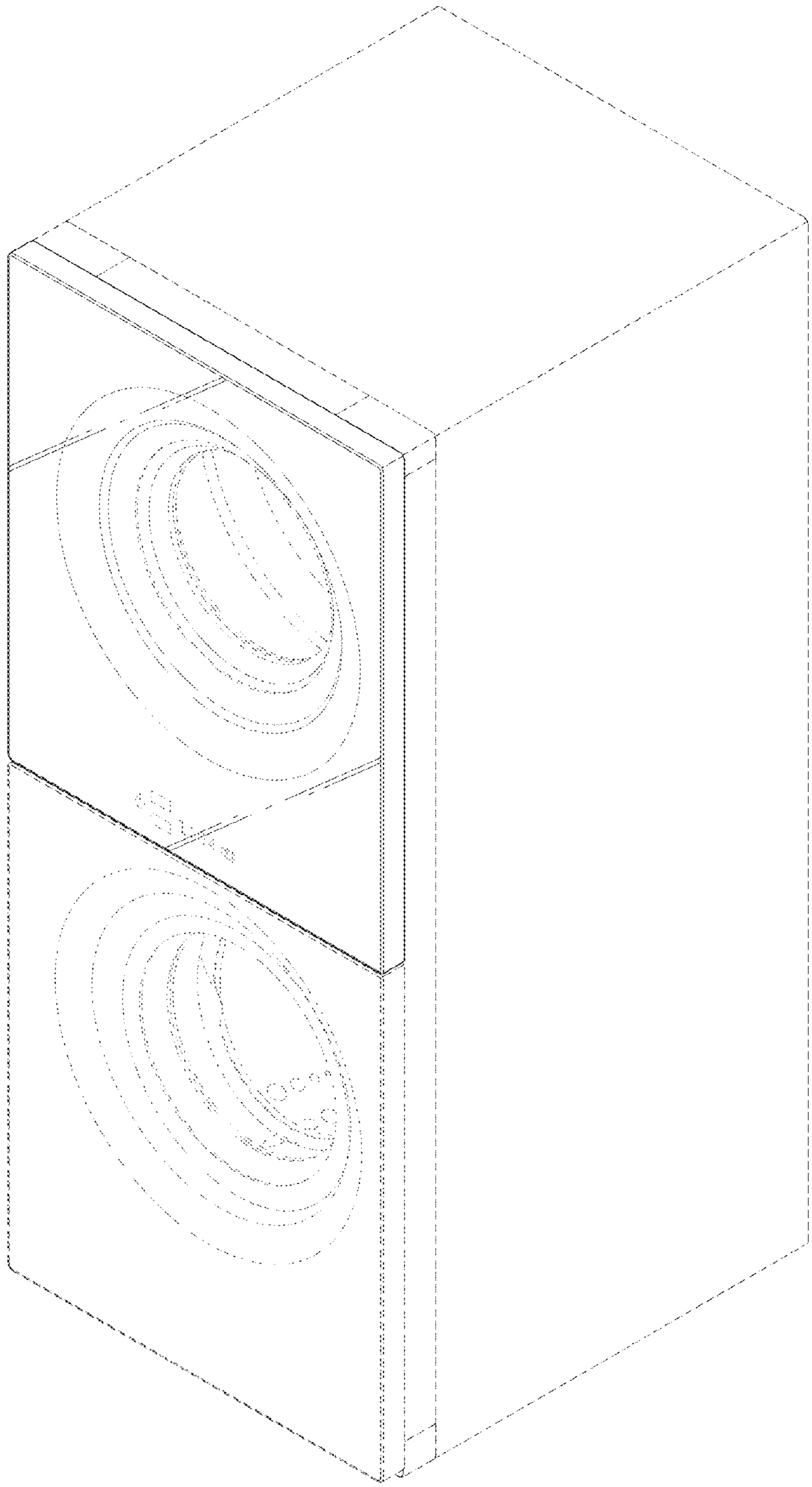
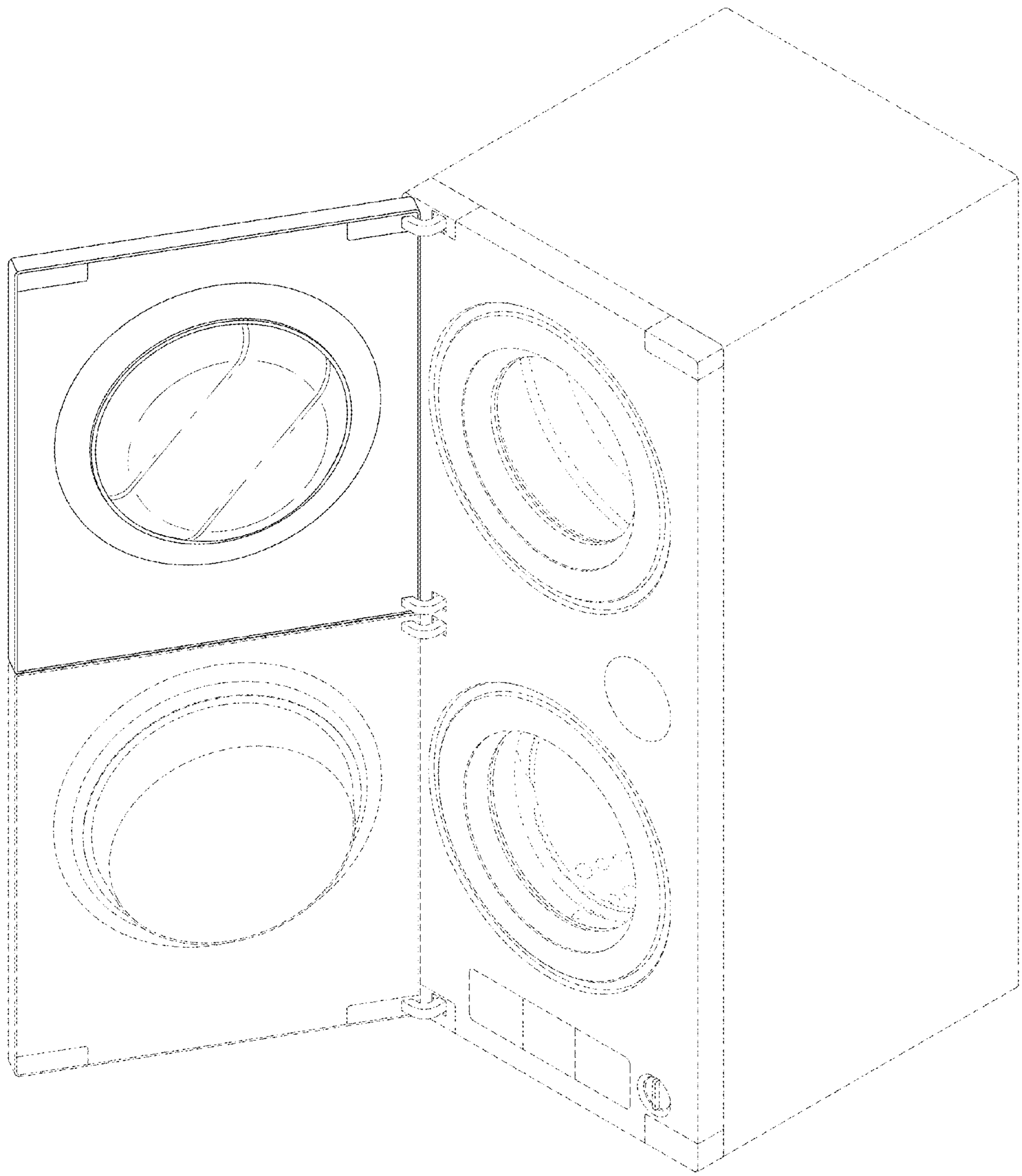
FIG. 9