US00D961534S

(12) United States Design Patent

Merriken et al.

(10) Patent No.: US D961,534 S
(45) Date of Patent: ** Aug. 23, 2022

(54) **ROLLER CAP**

(71) Applicant: **CATERPILLAR INC.**, Peoria, IL (US)

(72) Inventors: **Charles B. Merriken**, Lacon, IL (US); **Harry X. Michael**, Dunlap, IL (US)

(73) Assignee: **Caterpillar Inc.**, Peoria, IL (US)

(**) Term: **15 Years**

(21) Appl. No.: **29/727,928**

(22) Filed: **Mar. 13, 2020**

(51) **LOC (13) Cl.** **13-03**

(52) **U.S. Cl.**
USPC **D13/169**

(58) **Field of Classification Search**
USPC D12/123, 160, 179, 180, 174, 178; D14/403, 404, 402, 407, 408, 409, 217, D14/218, 356, 388, 389, 400, 401, D14/412–416, 432–434, 454, 496; D21/324–333; D34/27, 35; D8/300, 303; D15/138, 142; D13/169, 170
CPC F16D 55/22; F16D 55/225; F16D 55/226; F16D 55/227; F16D 55/228; F16D 65/0068; F16D 65/18; F16D 65/183; F16D 65/58; F16D 65/092; F16D 65/12; F16D 65/068; F16D 65/0975; F16D 2055/0016; B60T 1/065; B60T 13/588; B62D 1/22; G05G 9/047
See application file for complete search history.

(56) **References Cited**

U.S. PATENT DOCUMENTS

D412,703 S * 8/1999 Lorenz D14/416
D441,370 S * 5/2001 Alviar D14/413
D534,168 S * 12/2006 Wada D14/407
D534,535 S * 1/2007 Tzeng D14/407
7,334,658 B2 2/2008 Berg et al.
D582,356 S * 12/2008 Yamanaka D13/169
D598,021 S * 8/2009 Kujawski D14/409
(Continued)

OTHER PUBLICATIONS

Elobau.com. "Präzise und ergonomische Maschinensteuerung" First published Jun. 16, 2018. Retrieved Feb. 11, 2021. (https://www.elobau.com/de/news/praezise-und-ergonomische-maschinensteuerung/).*
(Continued)

Primary Examiner — Susan E Krakower
Assistant Examiner — Jerry Shiuan-Hua Hsu
(74) *Attorney, Agent, or Firm* — Finnegan, Henderson, Farabow, Garrett & Dunner, LLP

(57) **CLAIM**

The ornamental design for a roller cap, as shown and described.

DESCRIPTION

FIG. **1** is a front, left, top perspective view of a roller cap showing our new design;
FIG. **2** is a rear, right, top perspective view thereof;
FIG. **3** is a left, bottom perspective view thereof;
FIG. **4** is a left side view thereof;
FIG. **5** is a right side view thereof;
FIG. **6** is a rear elevation view thereof;
FIG. **7** is a front elevation view thereof;
FIG. **8** is a top plan view thereof;
FIG. **9** is a bottom plan view thereof;
FIG. **10** is a front, left, top perspective view thereof shown in a state of use;
FIG. **11** is a rear, right, top perspective view thereof shown in a state of use; and,
FIG. **12** is a top plan view thereof shown in a state of use. The broken lines illustrate portions of the roller cap that form no part of the claimed design. The broken lines depicting a flat surface in FIGS. **10-12** show environmental structure that form no part of the claimed design.

1 Claim, 12 Drawing Sheets

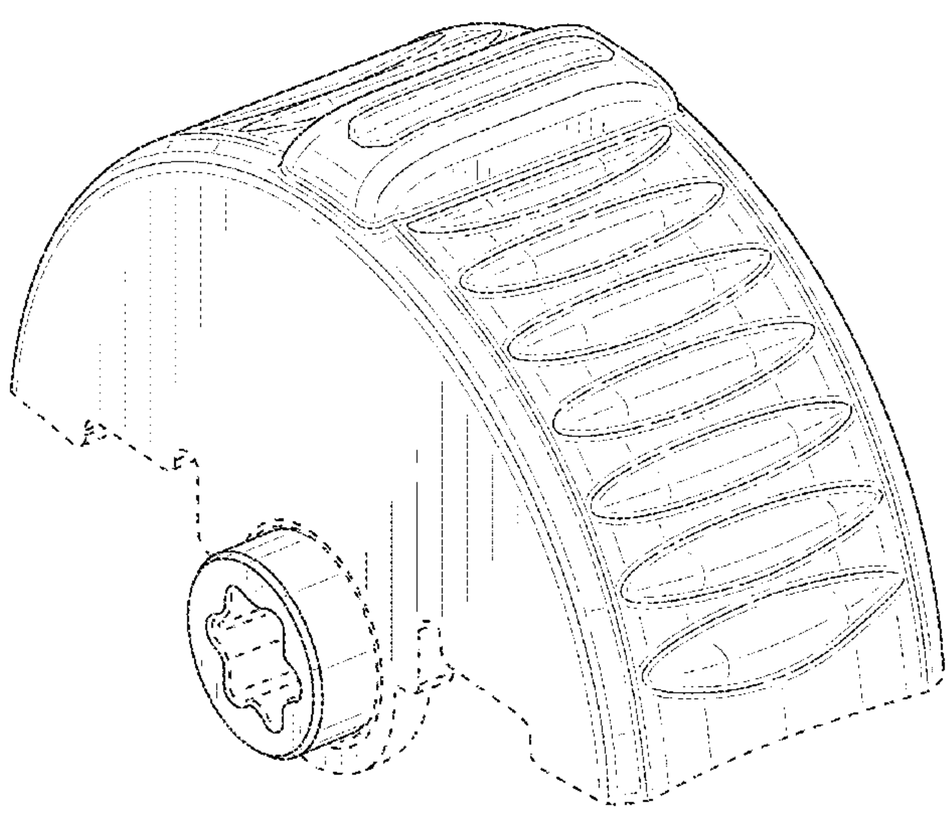

(56) **References Cited**

U.S. PATENT DOCUMENTS

D603,809	S *	11/2009	Mathew	D13/169
D611,434	S *	3/2010	Maehara	D13/169
7,838,789	B2	11/2010	Staffers et al.	
D643,077	S *	8/2011	Olason	D21/696
D643,484	S *	8/2011	Olason	D21/696
8,212,770	B2 *	7/2012	Obourn	G05G 9/047 345/161
8,746,395	B2	6/2014	Frazier et al.	
8,979,208	B2	3/2015	Roach et al.	
D740,886	S *	10/2015	Beams	D21/333
D745,009	S *	12/2015	Jensen	D14/415
D767,685	S *	9/2016	Beams	D21/333
9,790,661	B2	10/2017	Hand et al.	
D907,546	S *	1/2021	Bock	D12/180
2006/0137931	A1 *	6/2006	Berg	B62D 1/22 180/333
2015/0101440	A1	4/2015	Bonneau et al.	

OTHER PUBLICATIONS

Filfar.by. "Elobau Thumbwheel 175D" First retrieved Jul. 25, 2019. Retrieved Feb. 11, 2021. (http://www.filfar.by/PDF/elobau/2605.pdf).*

Elobau Sensor Technology, Inc., Thumbwheel 151DT01 Product Data Sheet (Mar. 11, 2020), https://www.elobau.com/en/product/operator-controls/operate-control/thumbwheels/thumbwheel-151dt01/ (4 pages).

APEM, HR Series Datasheet, https://www.apem.com/us/hr-series-82.html (last visited Mar. 11, 2020) (5 pages).

* cited by examiner

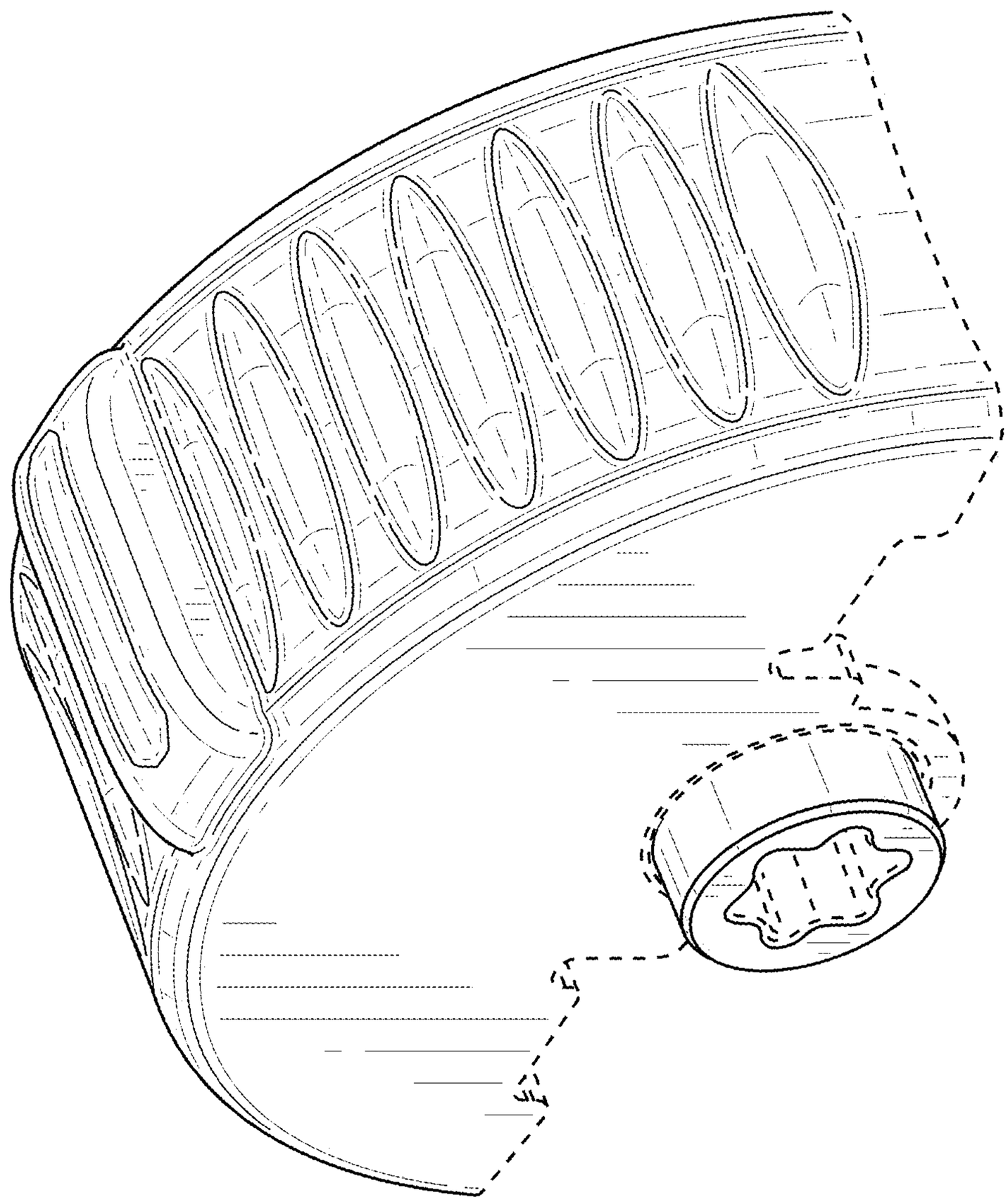

FIG. 1

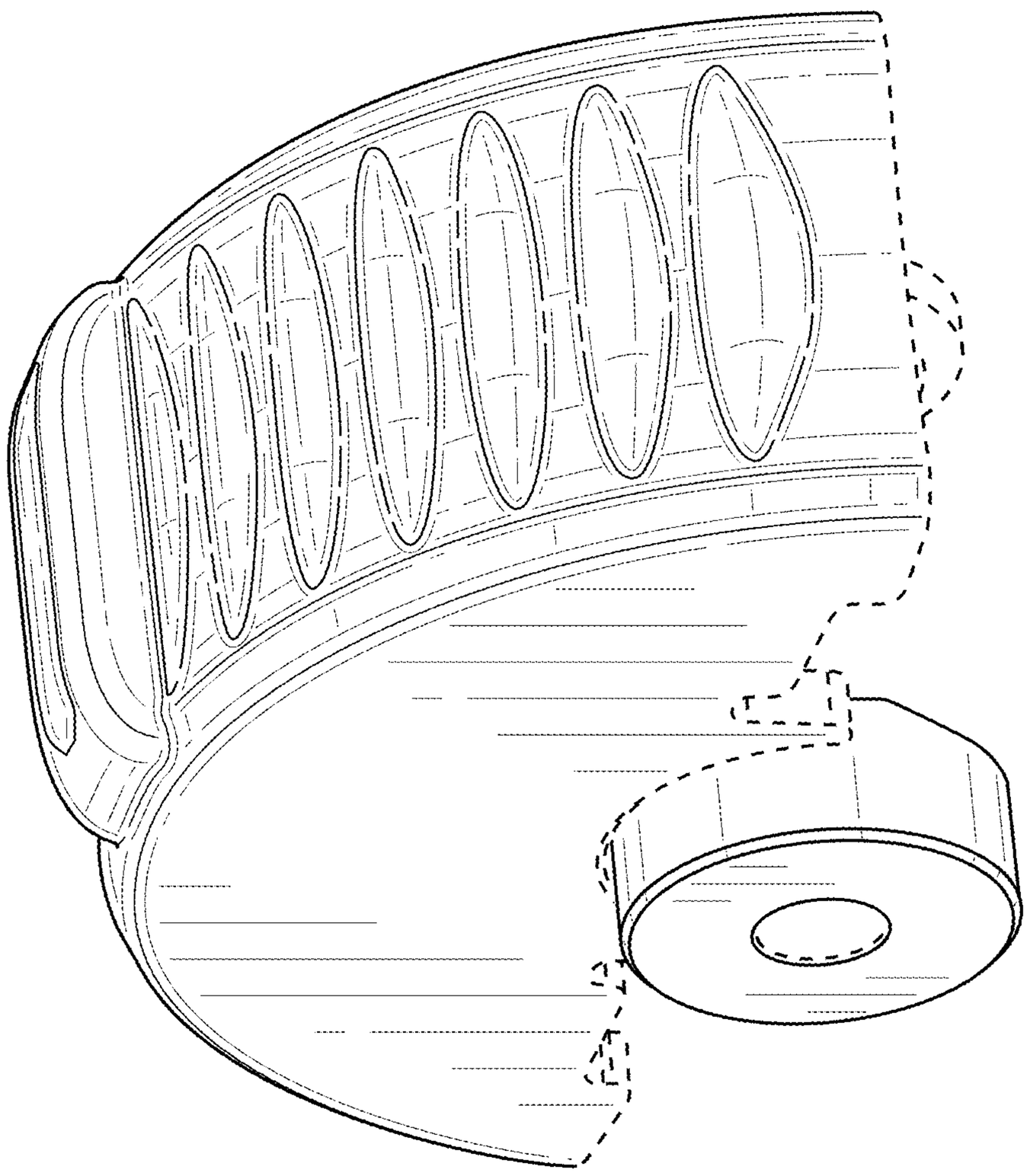

FIG. 2

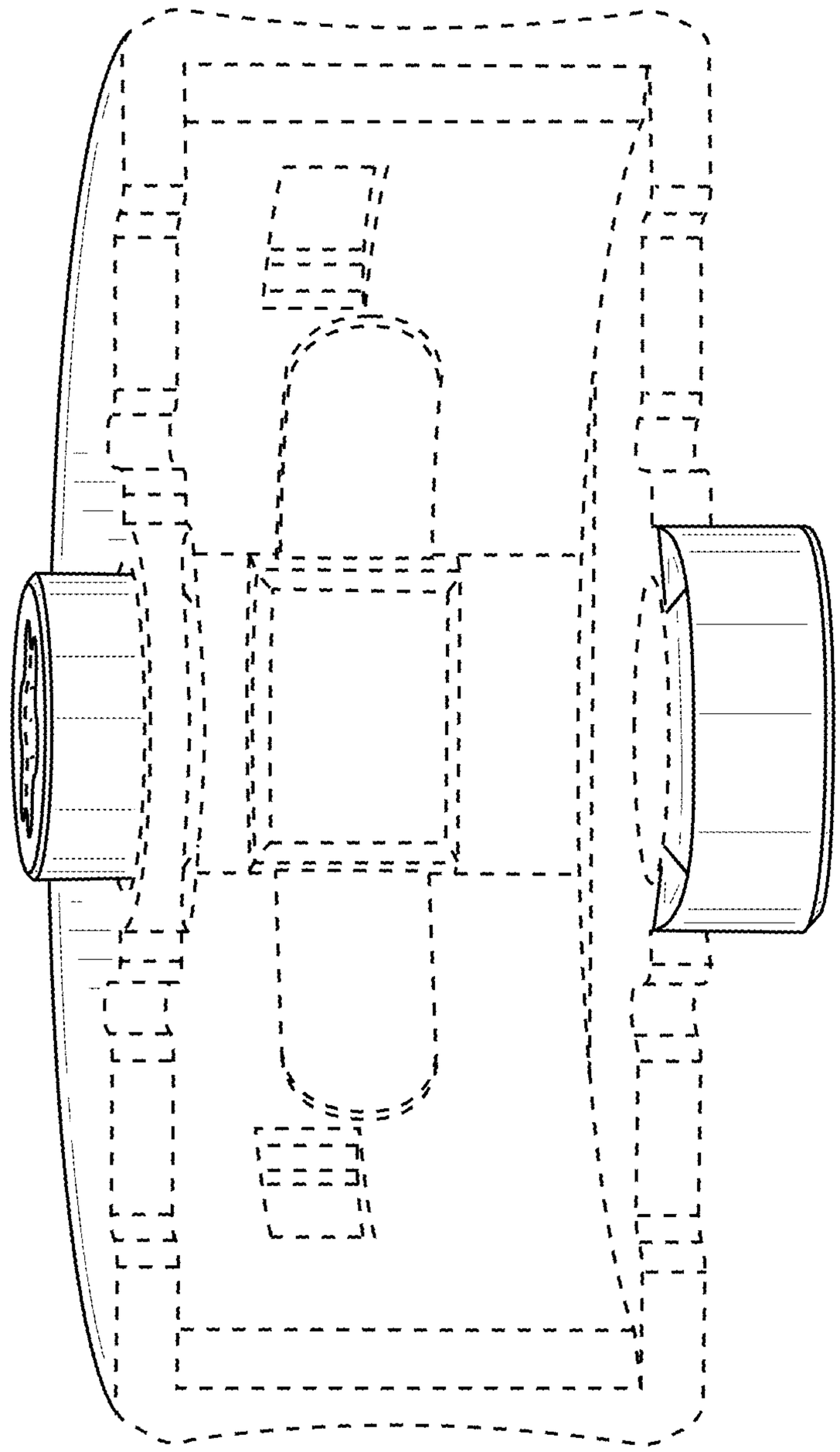

FIG. 3

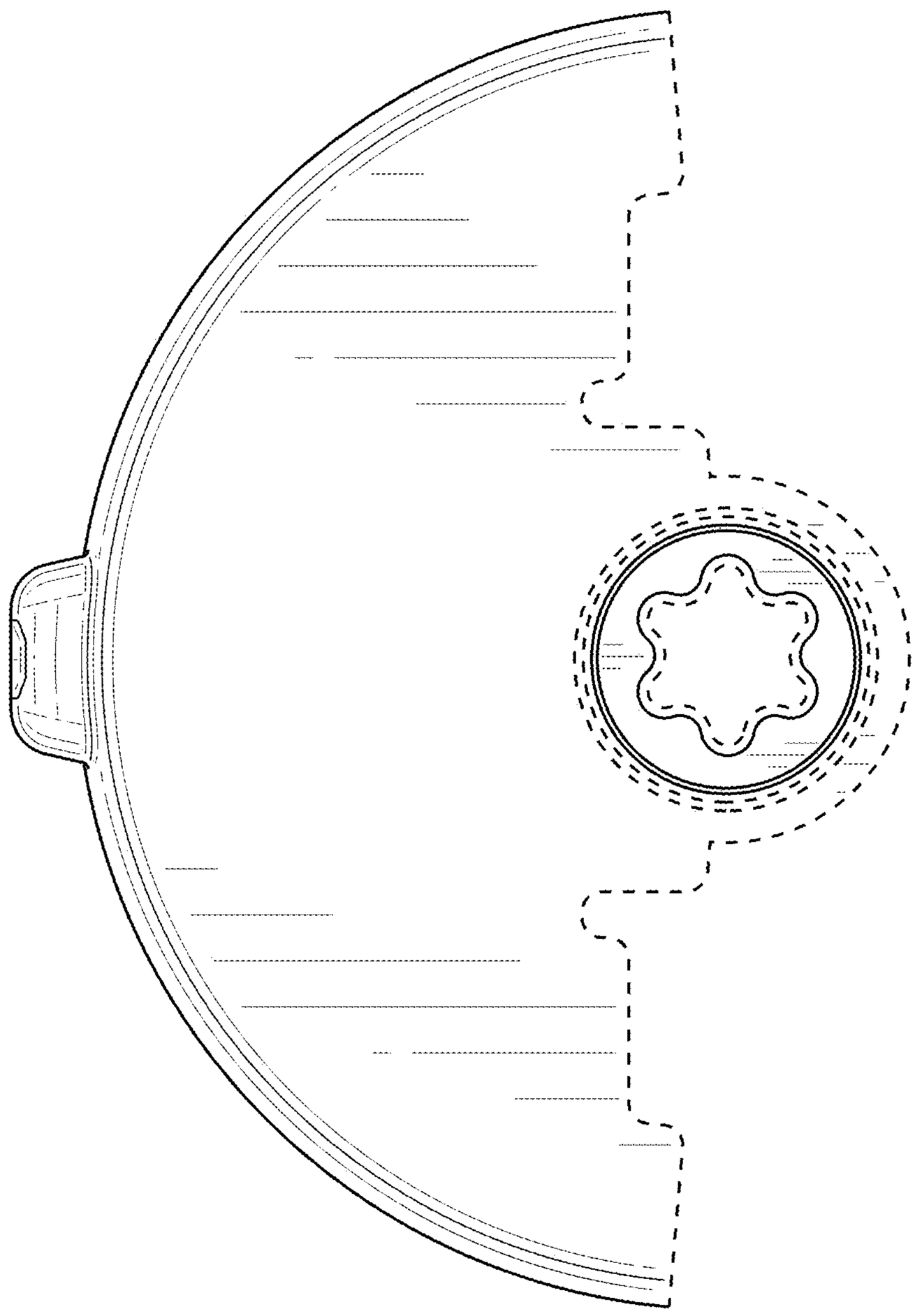

FIG. 4

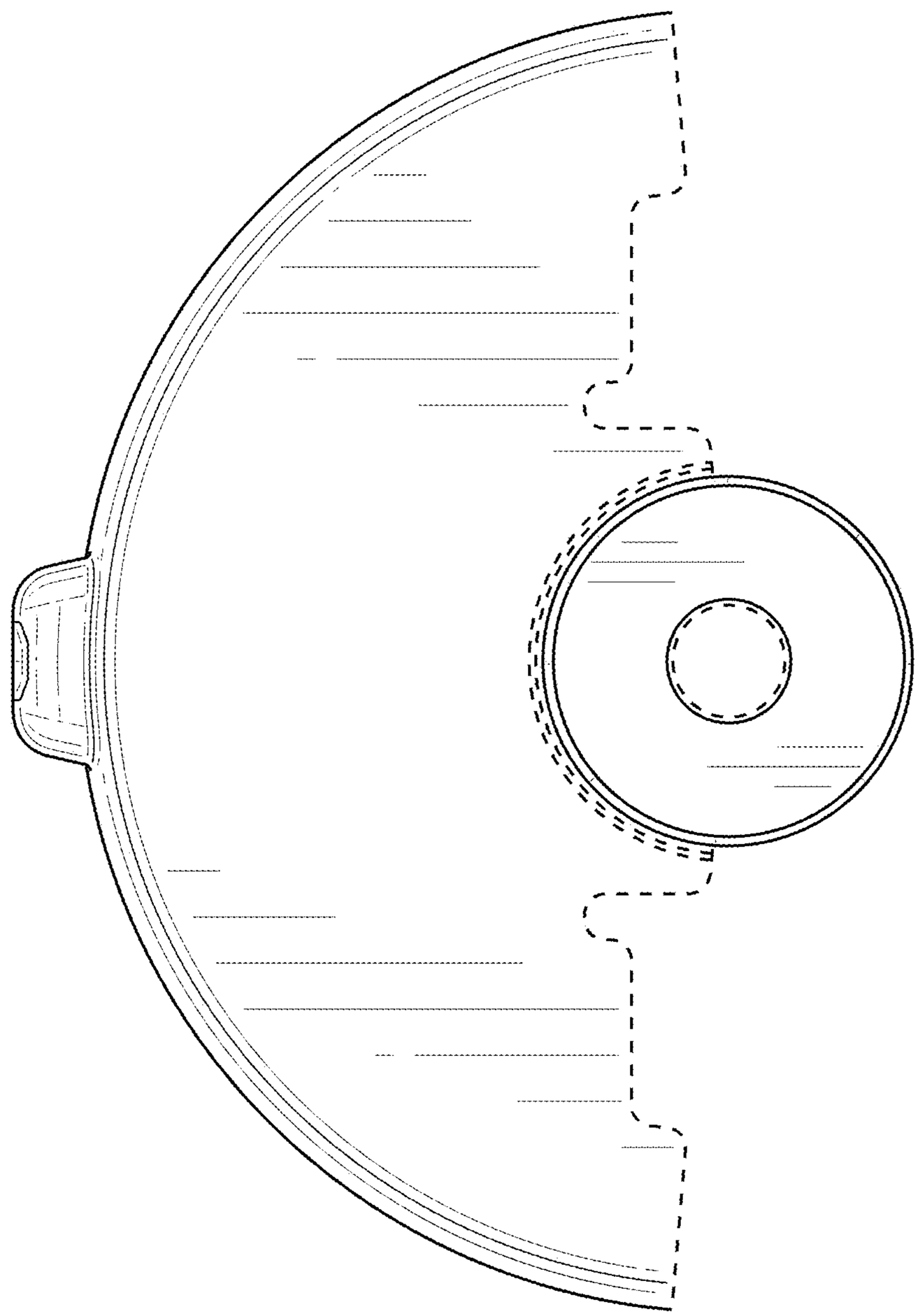

FIG. 5

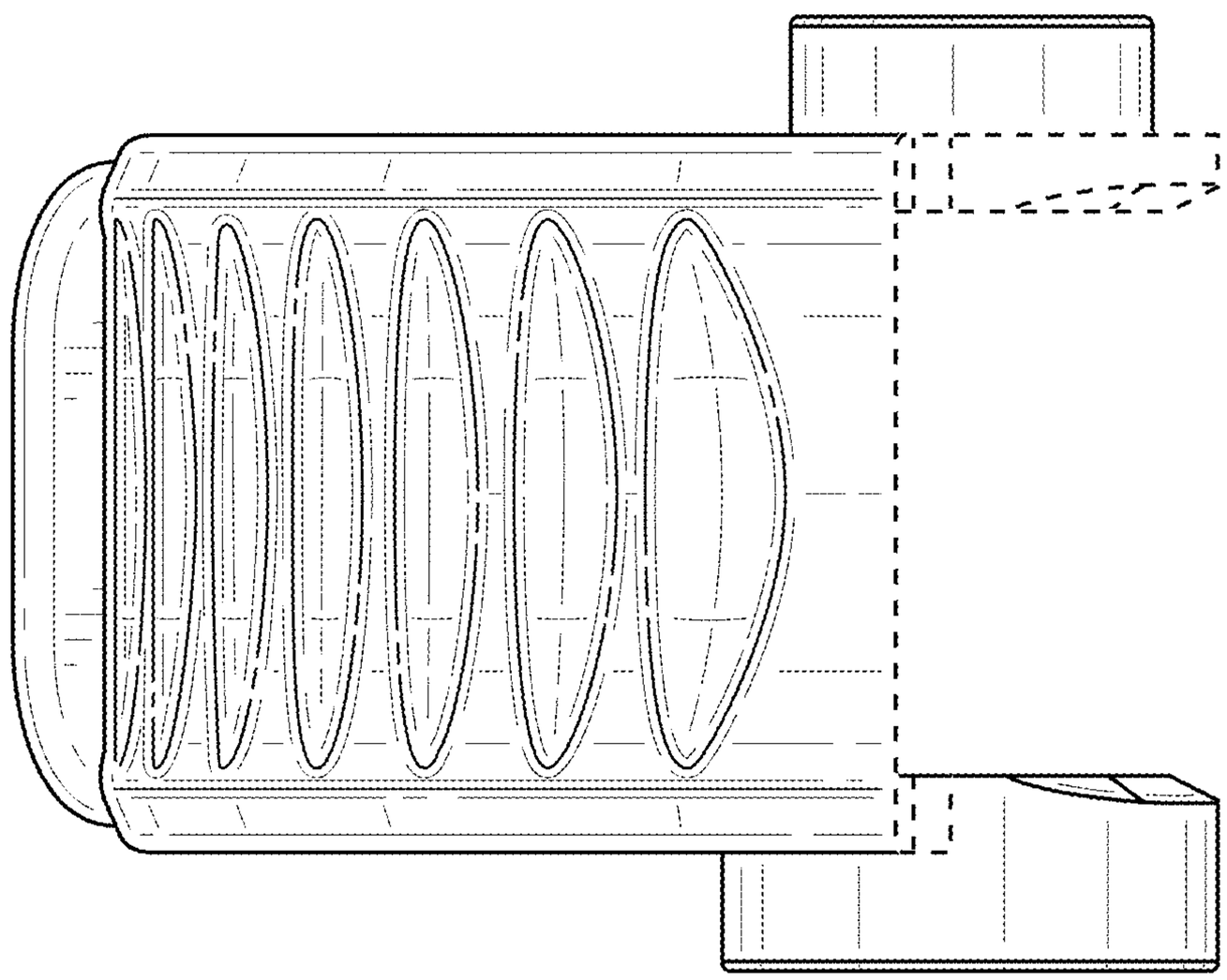

FIG. 6

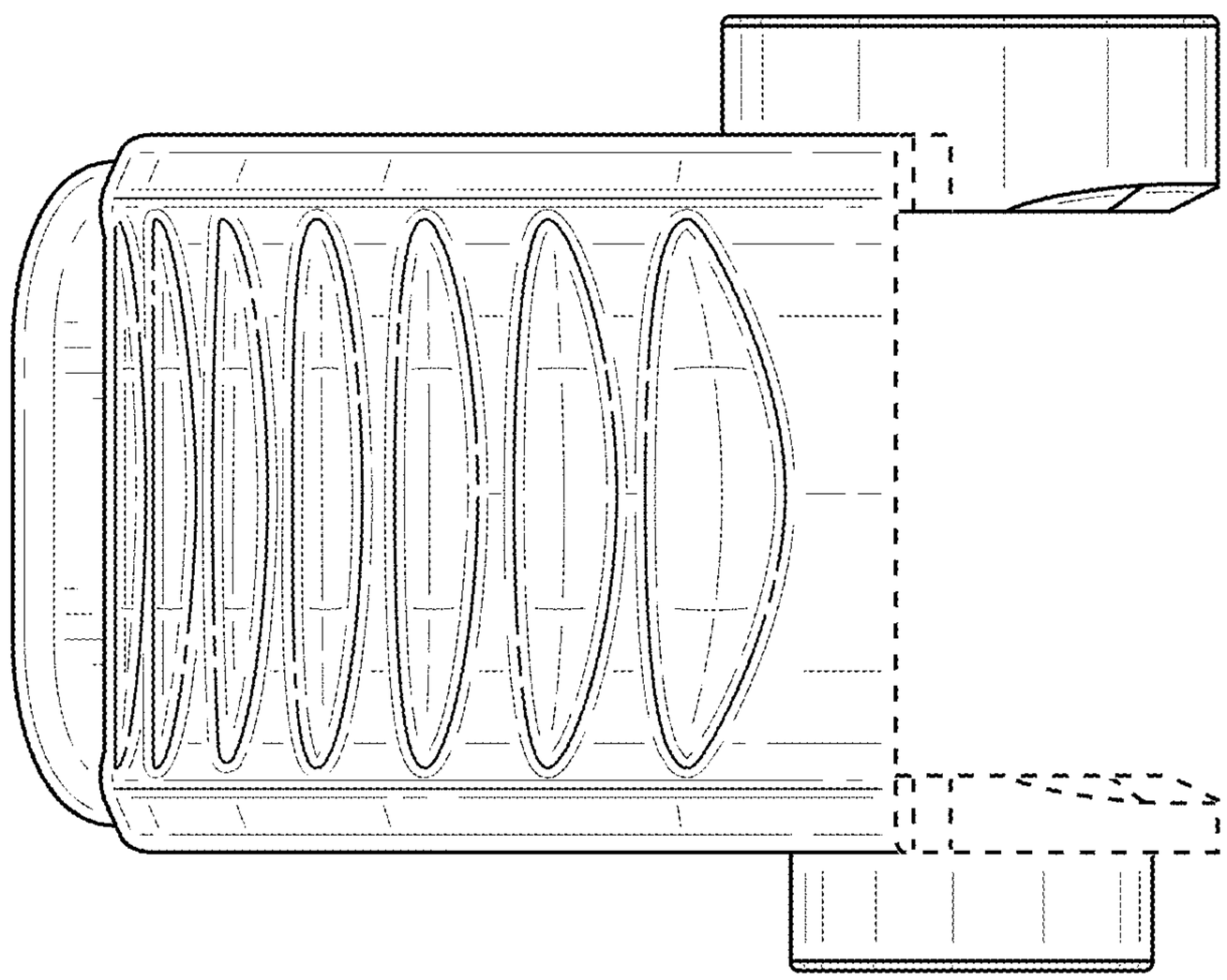

FIG. 7

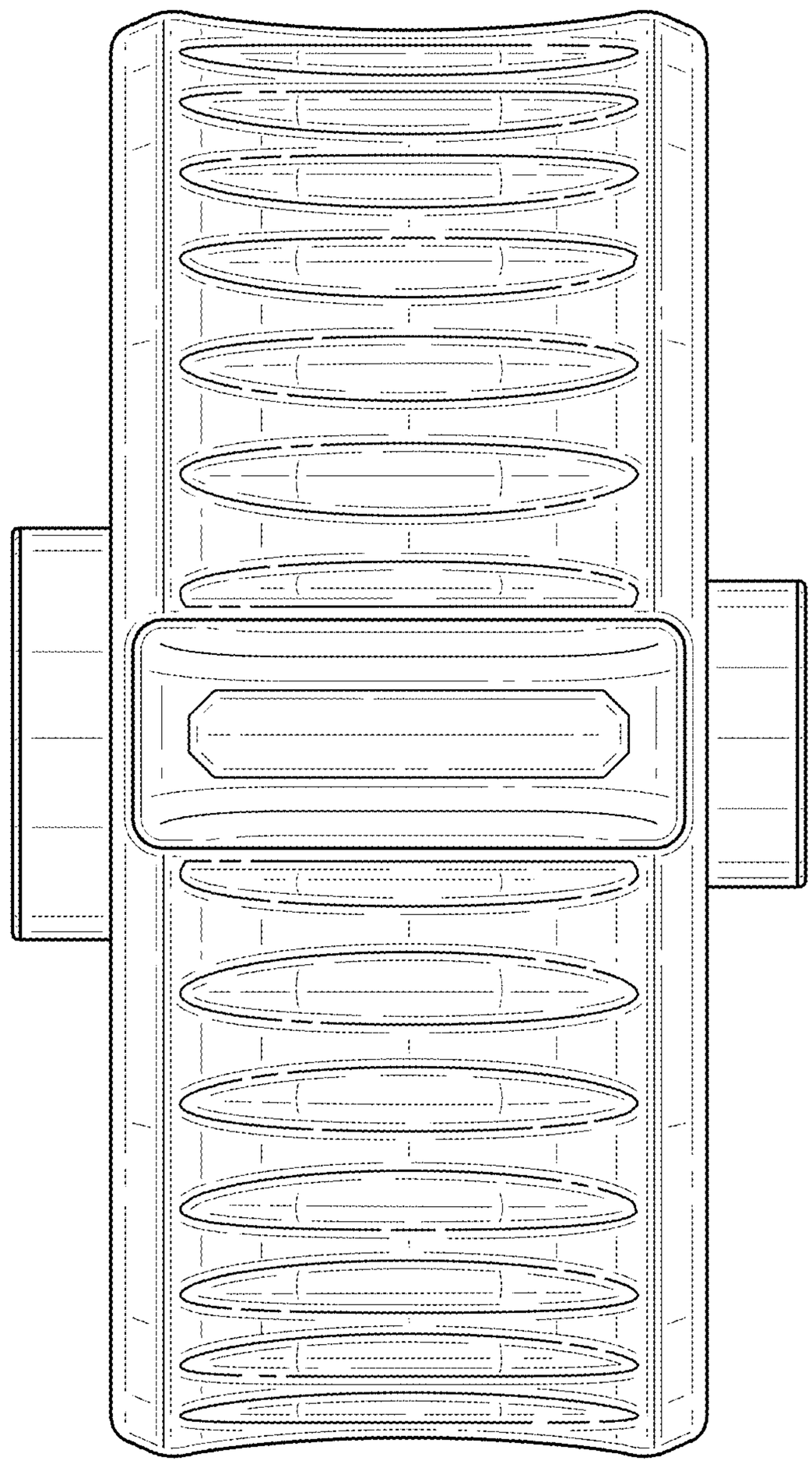

FIG. 8

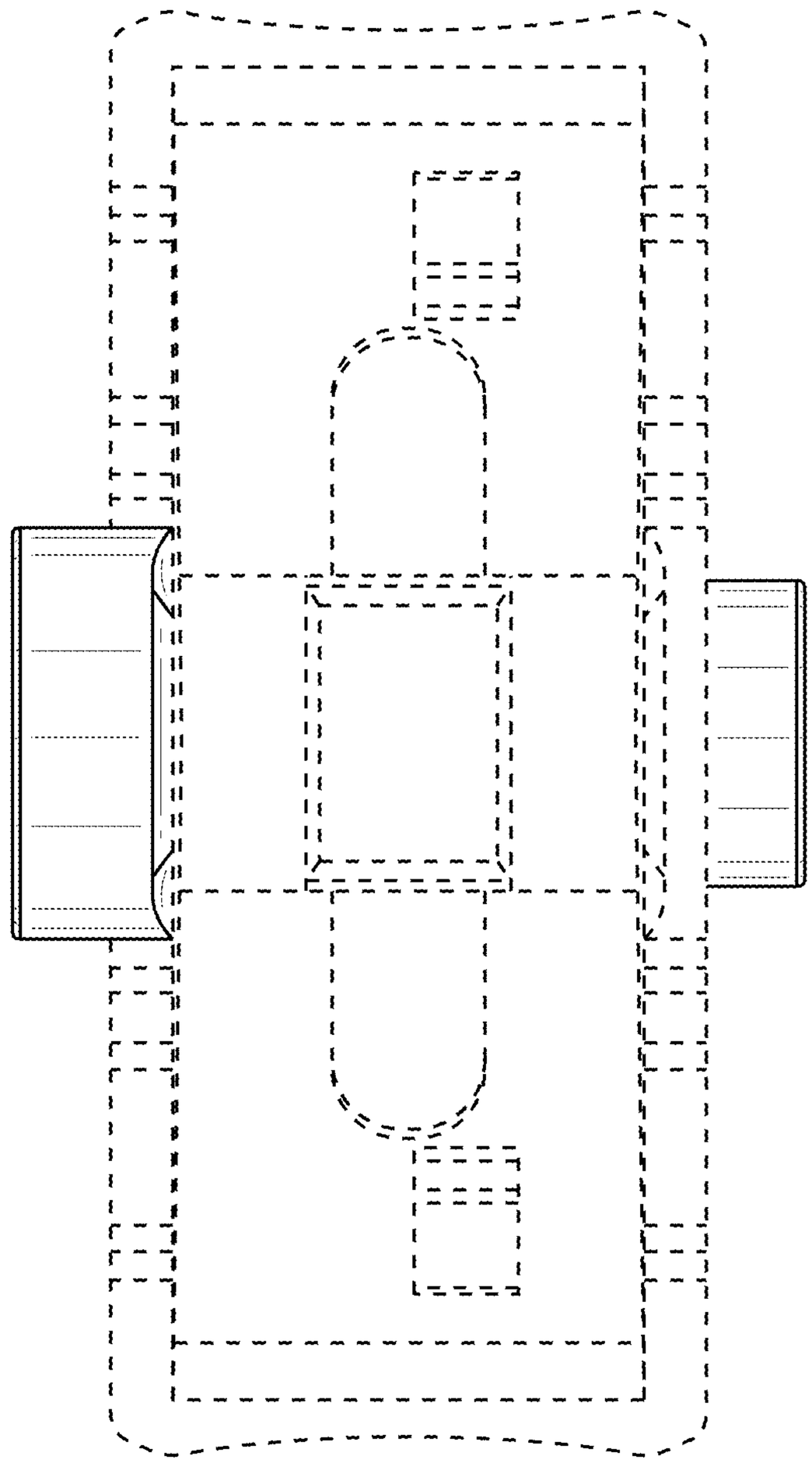

FIG. 9

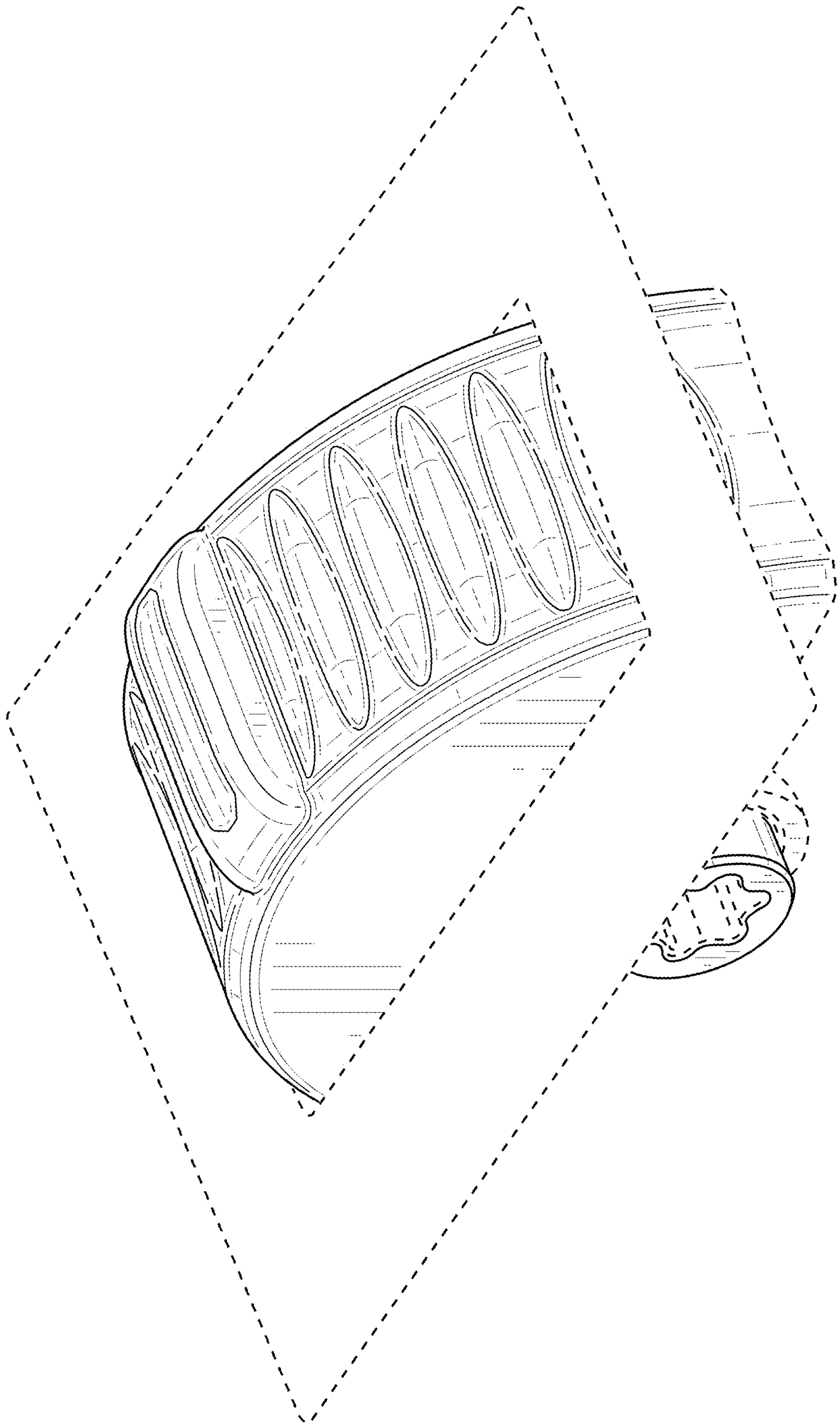

FIG. 10

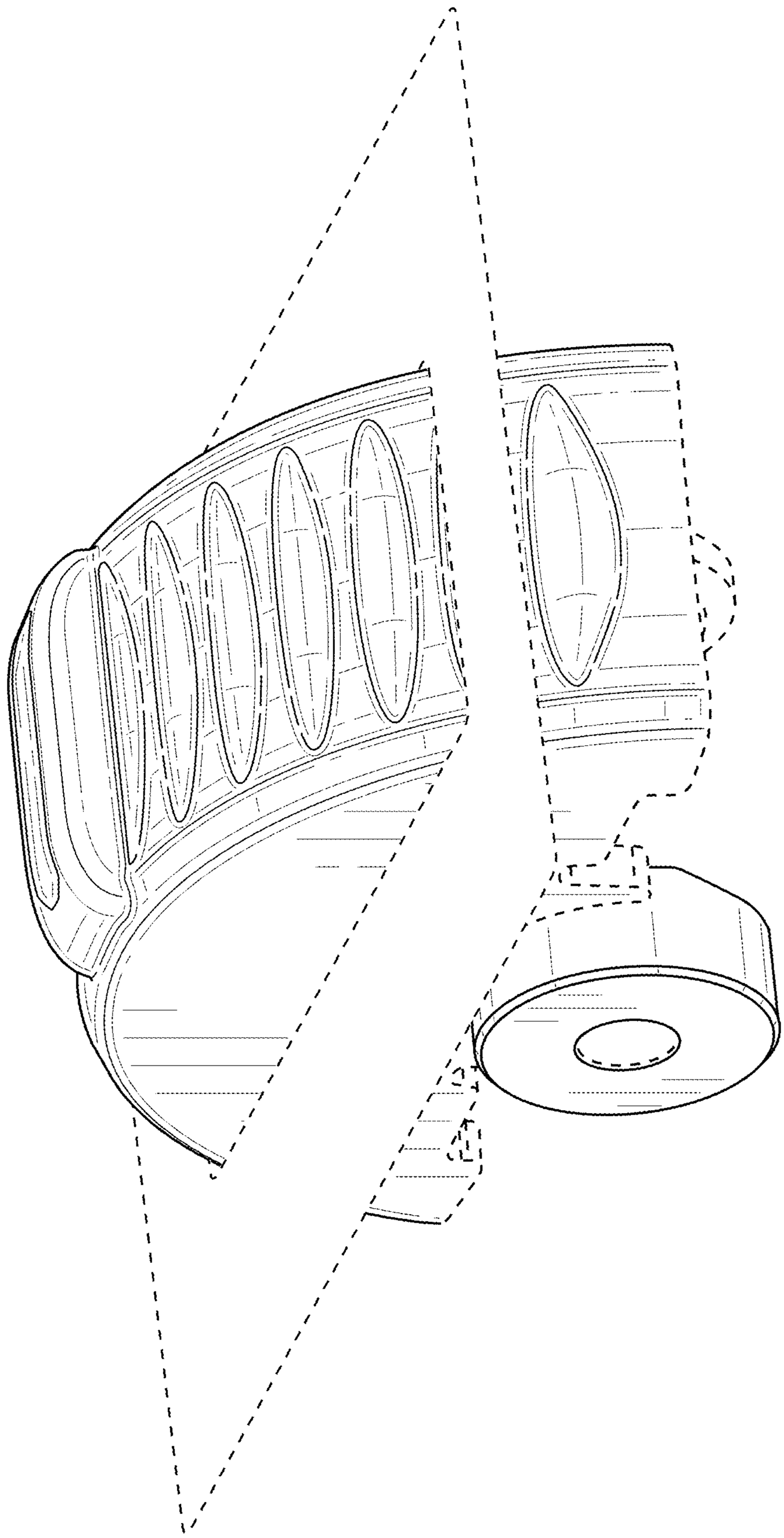

FIG. 11

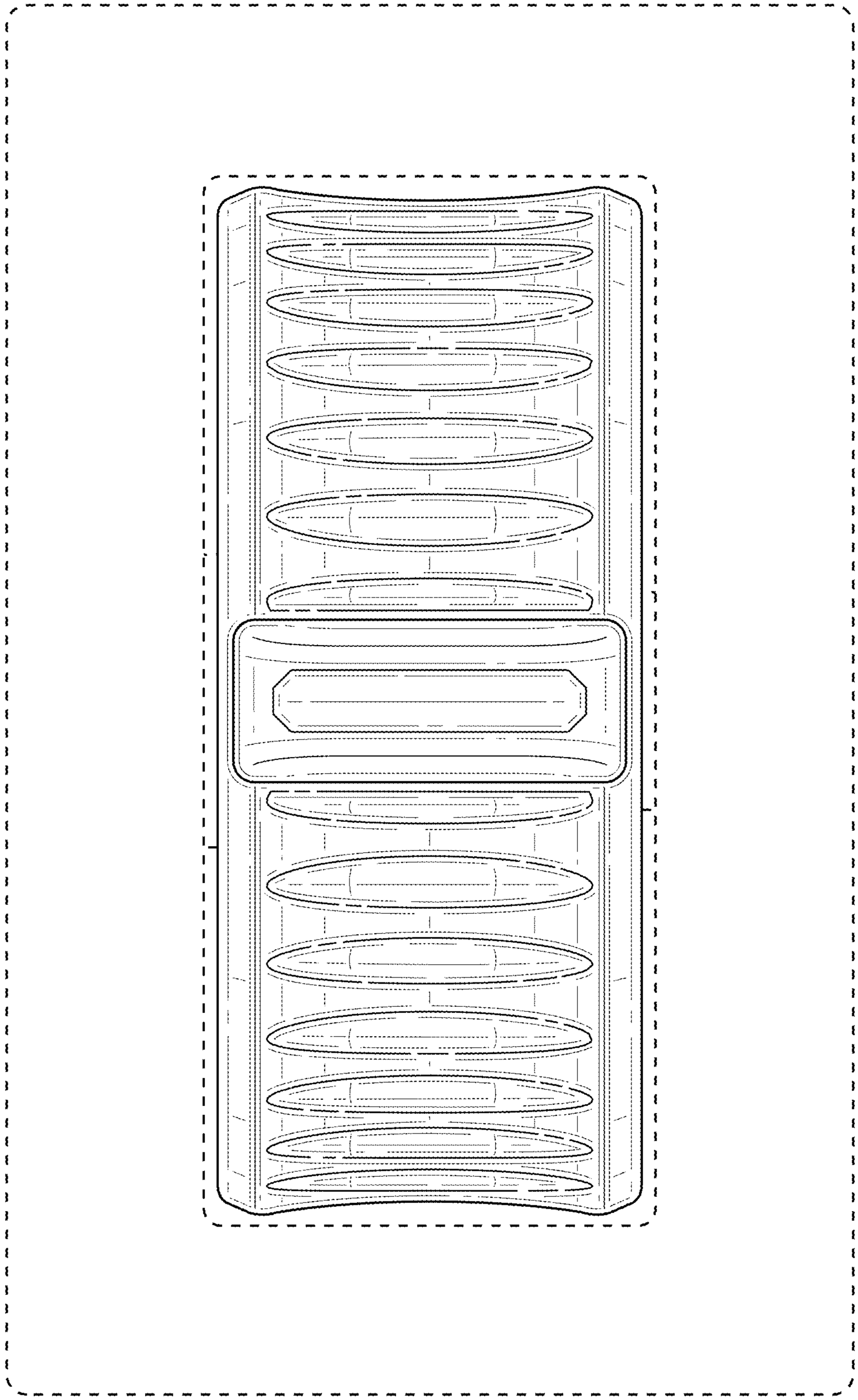

FIG. 12