US00D960070S

(12) United States Design Patent

Yang

(10) Patent No.: US D960,070 S
(45) Date of Patent: ** Aug. 9, 2022

(54) **TAILGATE HINGE**

(71) Applicant: **Yongjiang Yang**, Anyang (CN)

(72) Inventor: **Yongjiang Yang**, Anyang (CN)

(**) Term: **15 Years**

(21) Appl. No.: **29/797,971**

(22) Filed: **Jul. 5, 2021**

(51) **LOC (13) Cl.** **12-16**

(52) **U.S. Cl.**
USPC **D12/223**

(58) **Field of Classification Search**
USPC D8/323, 354, 382; D12/223; D6/702
CPC B60J 5/103; B60J 5/105; E05D 2700/02; E05D 2700/04; E05C 3/048; E05C 17/50; E05Y 2900/516; E05Y 2900/546
See application file for complete search history.

(56) **References Cited**

U.S. PATENT DOCUMENTS

D259,240	S	*	5/1981	Myron	D8/356
D260,852	S	*	9/1981	Loeschen	D8/381
D292,670	S	*	11/1987	Seegmiller	D8/382
D304,012	S	*	10/1989	Masuda	D8/323
5,052,729	A	*	10/1991	Huber	B60P 1/003 296/57.1
D563,771	S	*	3/2008	Prechtel	D8/354
D611,801	S	*	3/2010	Chustak	D8/355
D652,706	S	*	1/2012	Osaki	D8/329
D698,224	S		1/2014	Ridges	
D700,036	S	*	2/2014	Oshima	D8/323
D752,417	S	*	3/2016	Witting	D8/354
D759,473	S	*	6/2016	Zhou	D8/388
D785,438	S	*	5/2017	Cooper	D8/323
D850,891	S	*	6/2019	Rawls-Meehan	D8/355
10,889,227	B1	*	1/2021	Norfleet	E05F 1/1075
D915,186	S	*	4/2021	Barker	D8/382
2009/0250577	A1	*	10/2009	Townson	E05D 3/10 296/57.1
2015/0091322	A1		4/2015	Hausler et al.	
2015/0191952	A1	*	7/2015	Pyo	E05D 7/0009 16/239
2017/0122491	A1	*	5/2017	Mancuso	G01D 11/30
2017/0369108	A1	*	12/2017	Smith	B62D 43/02
2020/0123821	A1	*	4/2020	Earl	E05D 3/02

FOREIGN PATENT DOCUMENTS

CN	300817930	*	8/2008
CN	303661493	*	5/2016
CN	304847866	*	10/2018
CN	305623202	*	2/2020

(Continued)

OTHER PUBLICATIONS

Hooke Road Wrangler Tailgate Hinge, Image upload date: Jan. 26, 2021, Image retrieved on: Mar. 21, 2022 (online),<https://www.amazon.com/Hooke-Road-Tailgate-Hinge-Wrangler/dp/B08C26RS4Z#customerReviews>.*

Primary Examiner — Sheryl Lane
Assistant Examiner — Ieisha N Price

(57) **CLAIM**

The ornamental design for a tailgate hinge, as shown and described.

DESCRIPTION

FIG. **1** is a front perspective view of a tailgate hinge showing my new design;
FIG. **2** is a rear perspective view thereof;
FIG. **3** is a front elevational view thereof;
FIG. **4** is a rear elevational view thereof;
FIG. **5** is a left side elevational view thereof;
FIG. **6** is a right side elevational view thereof;
FIG. **7** is a top plan view thereof; and,
FIG. **8** is a bottom plan view thereof.
The broken lines in the drawings depict portions of the tailgate hinge that form no part of the claimed design.

1 Claim, 8 Drawing Sheets

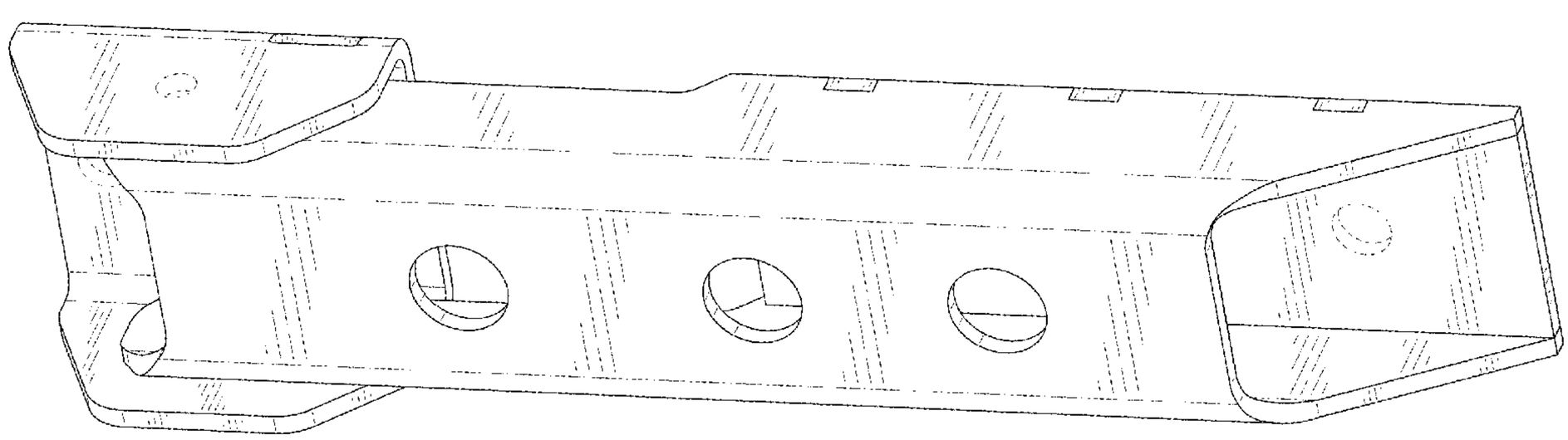

(56) **References Cited**

FOREIGN PATENT DOCUMENTS

CN	306509272	*	5/2021
GB	3021946	*	9/2005
IN	314548-001-0001	*	12/2019
KR	301087578.0000	*	12/2020

* cited by examiner

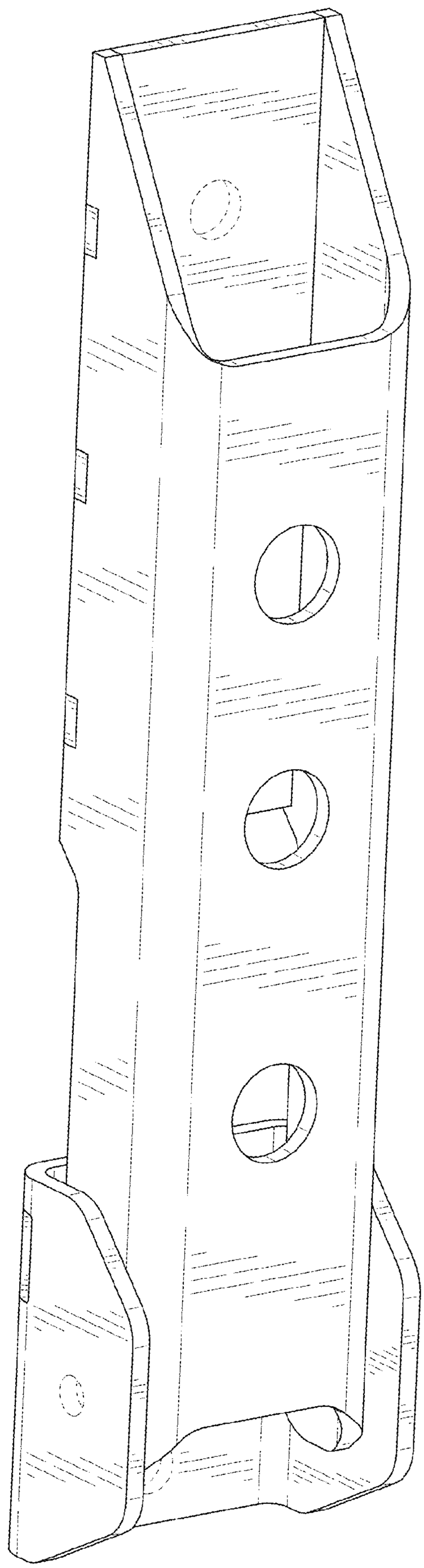

FIG. 1

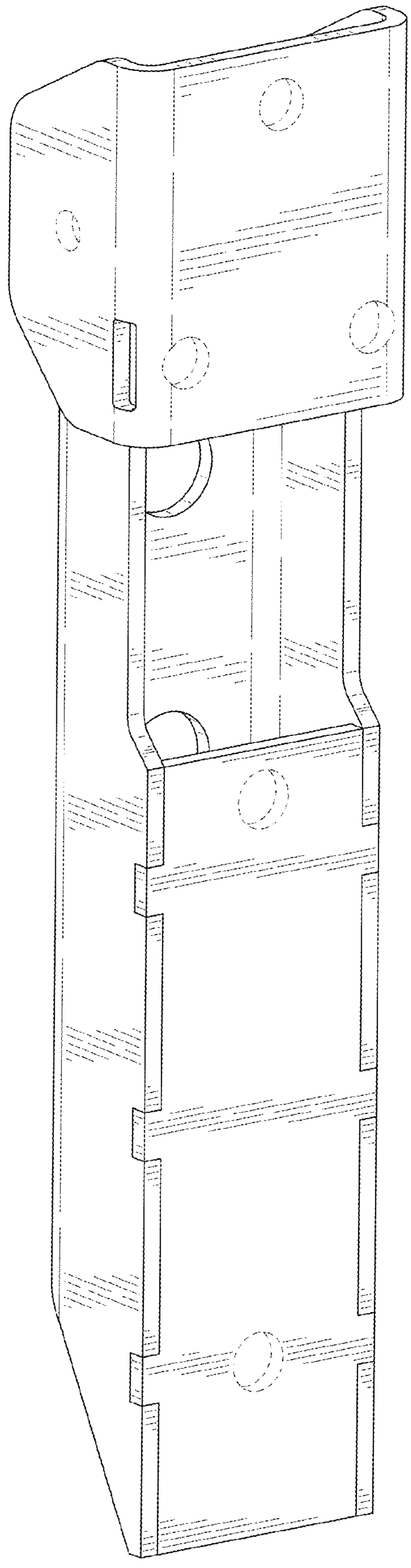

FIG. 2

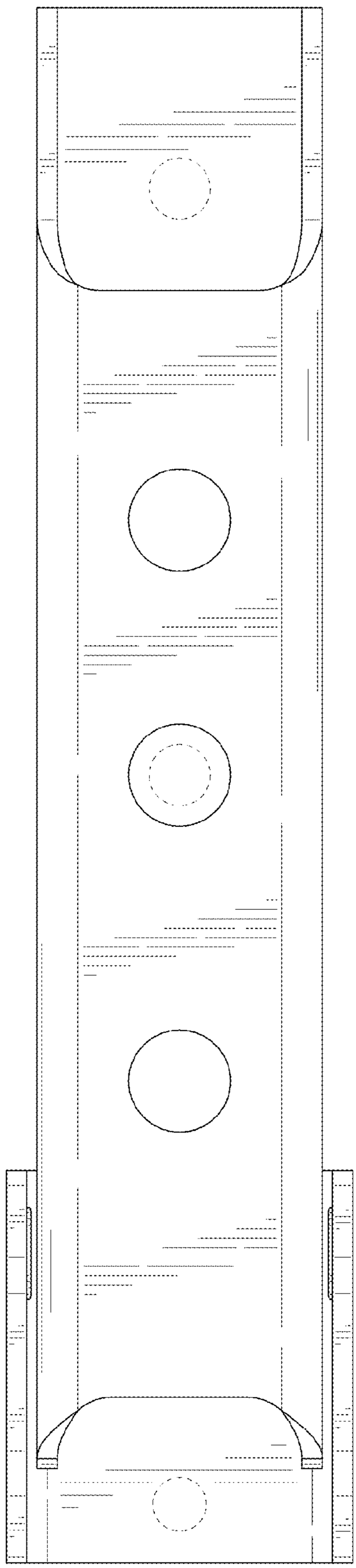

FIG. 3

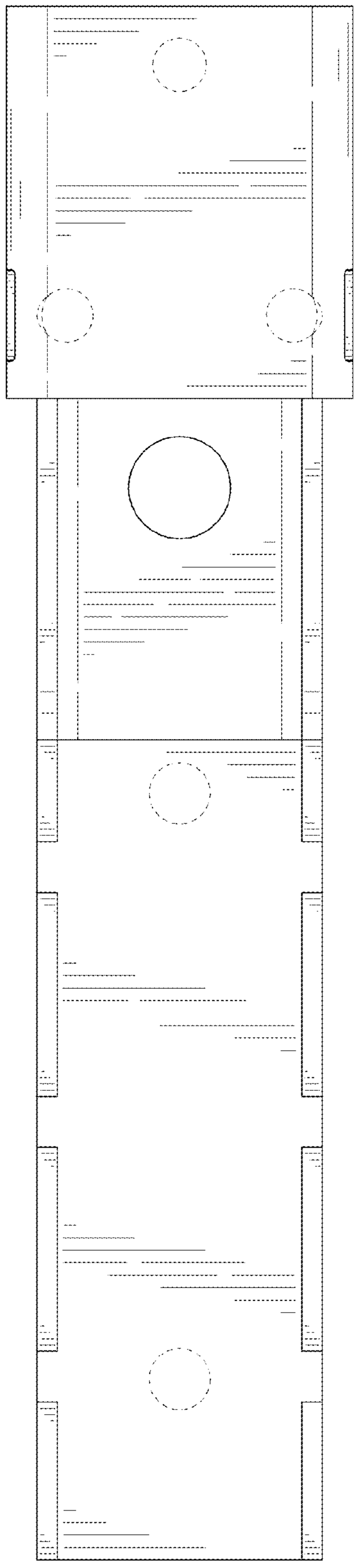

FIG. 4

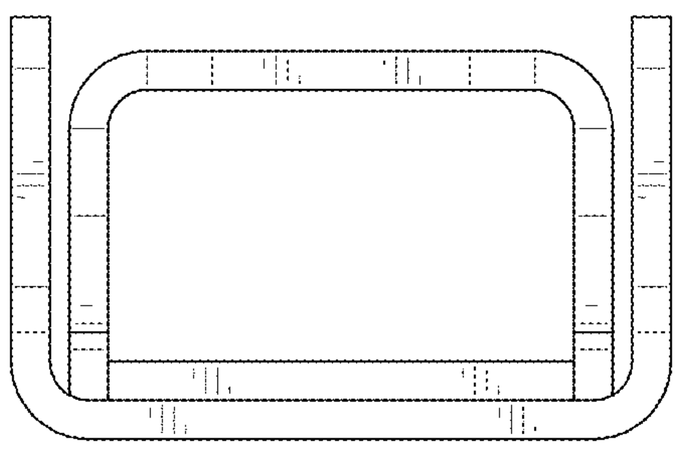

FIG. 5

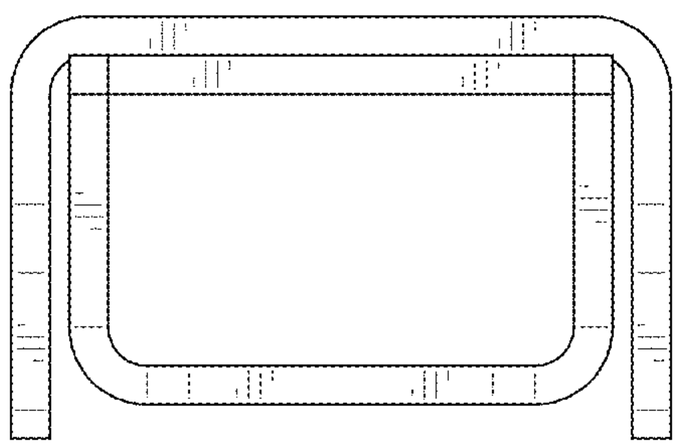

FIG. 6

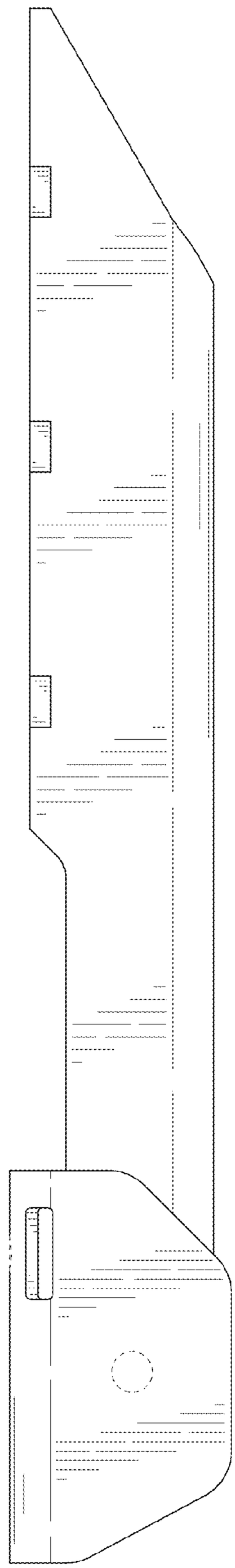

FIG. 7

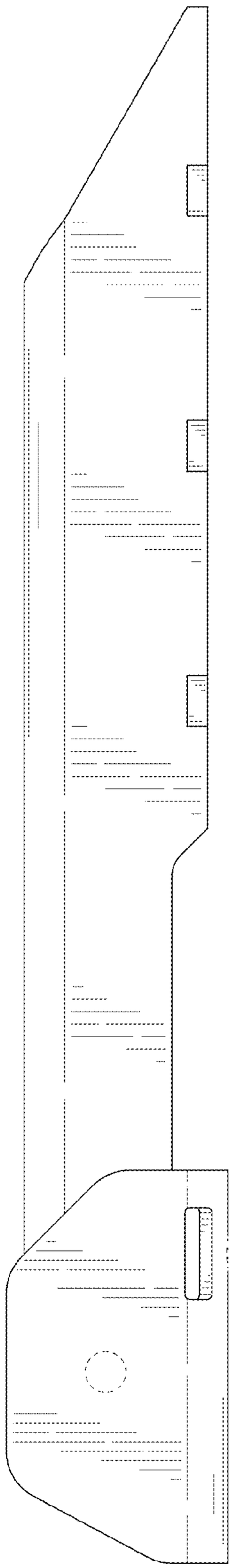

FIG. 8