US00D959387S

(12) United States Design Patent

Takano

(10) Patent No.: US D959,387 S
(45) Date of Patent: ** *Aug. 2, 2022

(54) **TRAY FOR CARD CONNECTOR**

(71) Applicant: **Japan Aviation Electronics Industry, Limited**, Tokyo (JP)

(72) Inventor: **Kei Takano**, Tokyo (JP)

(73) Assignee: **JAPAN AVIATION ELECTRONICS INDUSTRY, LIMITED**, Tokyo (JP)

(*) Notice: This patent is subject to a terminal disclaimer.

(**) Term: **15 Years**

(21) Appl. No.: **29/766,439**

(22) Filed: **Jan. 15, 2021**

(30) **Foreign Application Priority Data**

Jul. 28, 2020 (JP) ..... 2020-015616 D

(51) **LOC (13) Cl.** **13-03**

(52) **U.S. Cl.**
USPC **D13/154**

(58) **Field of Classification Search**
USPC D13/110, 118, 120, 123, 133, 146, 147, D13/149, 154, 156, 158, 159, 184, 199; D14/433, 438, 439
CPC H01R 13/52; H01R 13/62; H01R 13/502; H01R 13/514; H01R 13/639; H01R 13/6272; H01R 13/6275; H01R 13/6278; H01R 13/6471; H01R 12/52; H01R 12/53; H01R 12/515; H01R 12/585; H01R 12/716; H01R 12/7005; H05K 1/18; H05K 5/0256
See application file for complete search history.

(56) **References Cited**

U.S. PATENT DOCUMENTS

D642,129 S * 7/2011 Ohkuma D13/133
D816,618 S * 5/2018 Mikawa D13/154
2012/0276765 A1* 11/2012 Nakase H04M 1/026 439/159
2015/0056851 A1* 2/2015 Zhang G06K 13/14 439/527
2016/0036143 A1* 2/2016 Motohashi G06K 13/08 439/160
2016/0111801 A1* 4/2016 Zeng H01R 12/7076 439/660
2016/0164205 A1* 6/2016 Nagase G06K 13/08 439/159
2017/0077629 A1* 3/2017 Ferenczi G06K 7/00
2017/0172004 A1* 6/2017 Yang H05K 7/1427
2017/0207591 A1* 7/2017 Chen H01R 13/6581
2017/0250480 A1* 8/2017 Park G06K 13/08

* cited by examiner

Primary Examiner — Derrick E Holland
(74) *Attorney, Agent, or Firm* — Manabu Kanesaka

(57) **CLAIM**

The ornamental design for a tray for card connector, as shown and described.

DESCRIPTION

FIG. **1** is a front elevational view of a tray for card connector showing my new design;
FIG. **2** is a rear elevational view thereof;
FIG. **3** is a right side elevational view thereof;
FIG. **4** is a left side elevational view thereof;
FIG. **5** is a top plan view thereof;
FIG. **6** is a bottom plan view thereof;
FIG. **7** is a perspective view showing a front, top and right side thereof;
FIG. **8** is a perspective view showing a rear, bottom and left side thereof;
FIG. **9** is a perspective view showing a front, right and bottom side thereof; and,
FIG. **10** is a perspective view showing a rear, left and top side thereof.

1 Claim, 5 Drawing Sheets

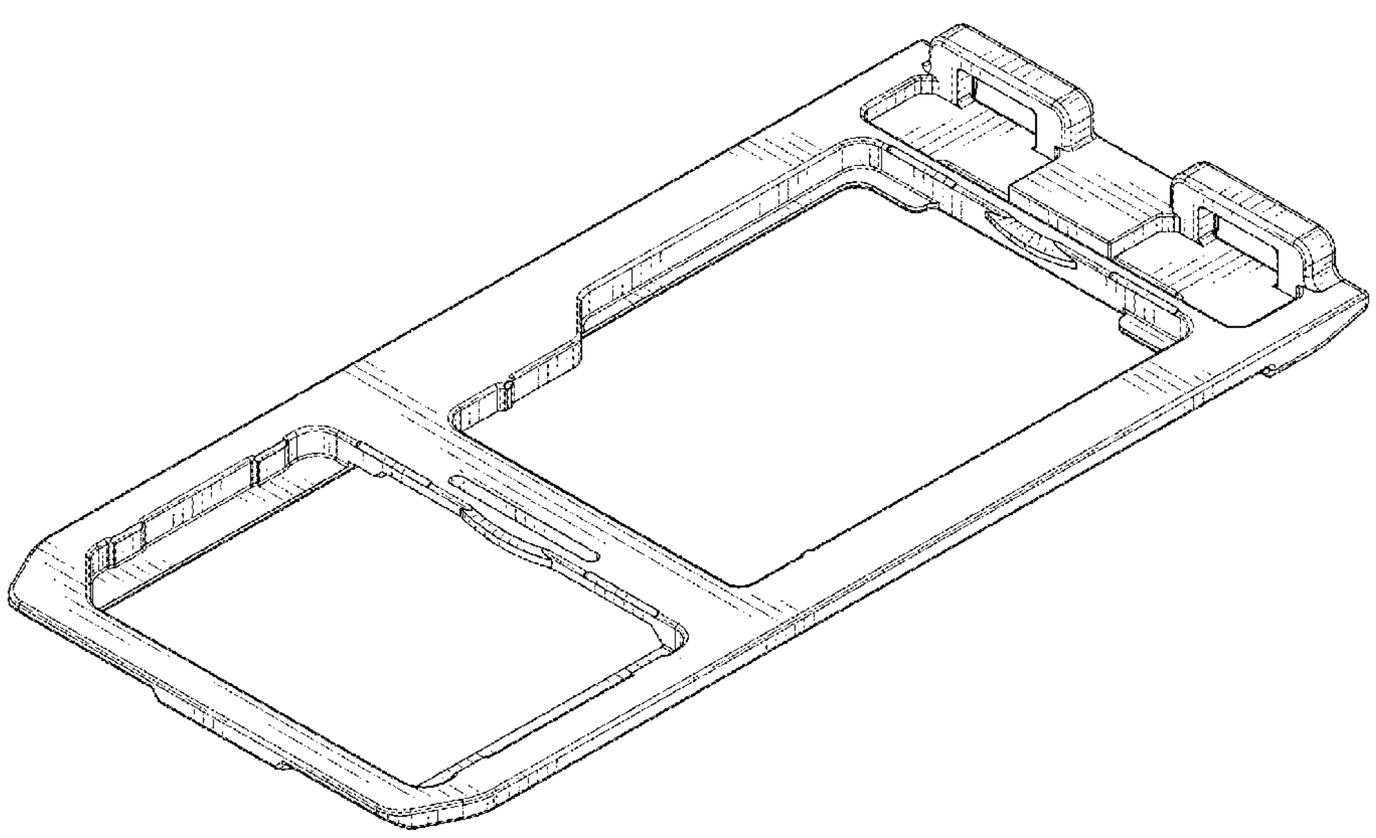

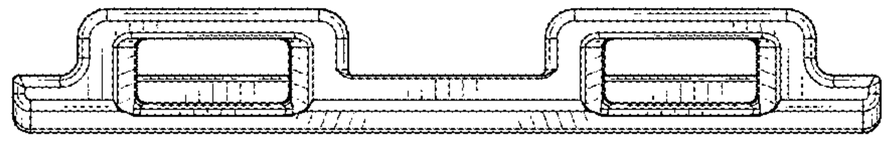

FIG. 1

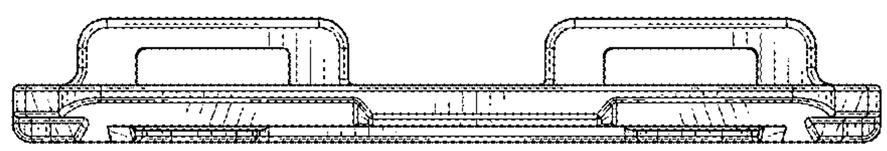

FIG. 2

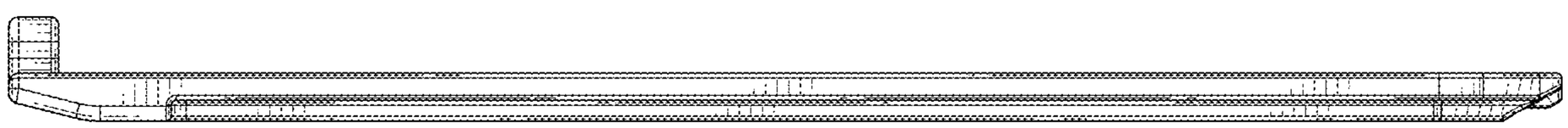

FIG. 3

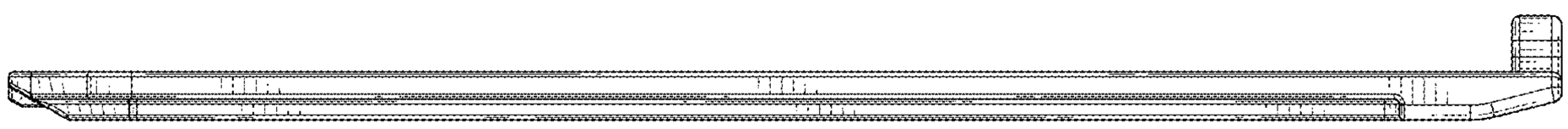

FIG. 4

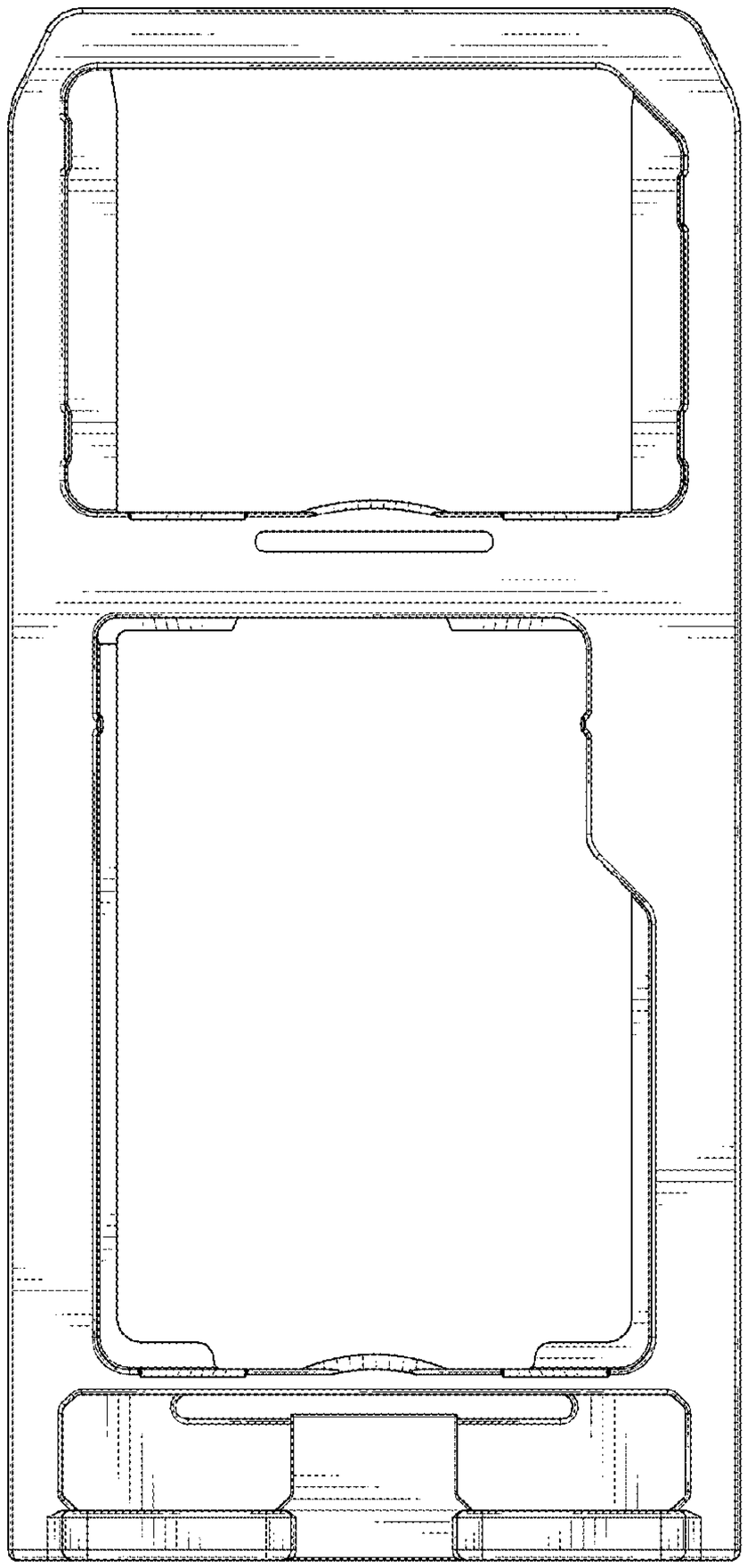

FIG. 5

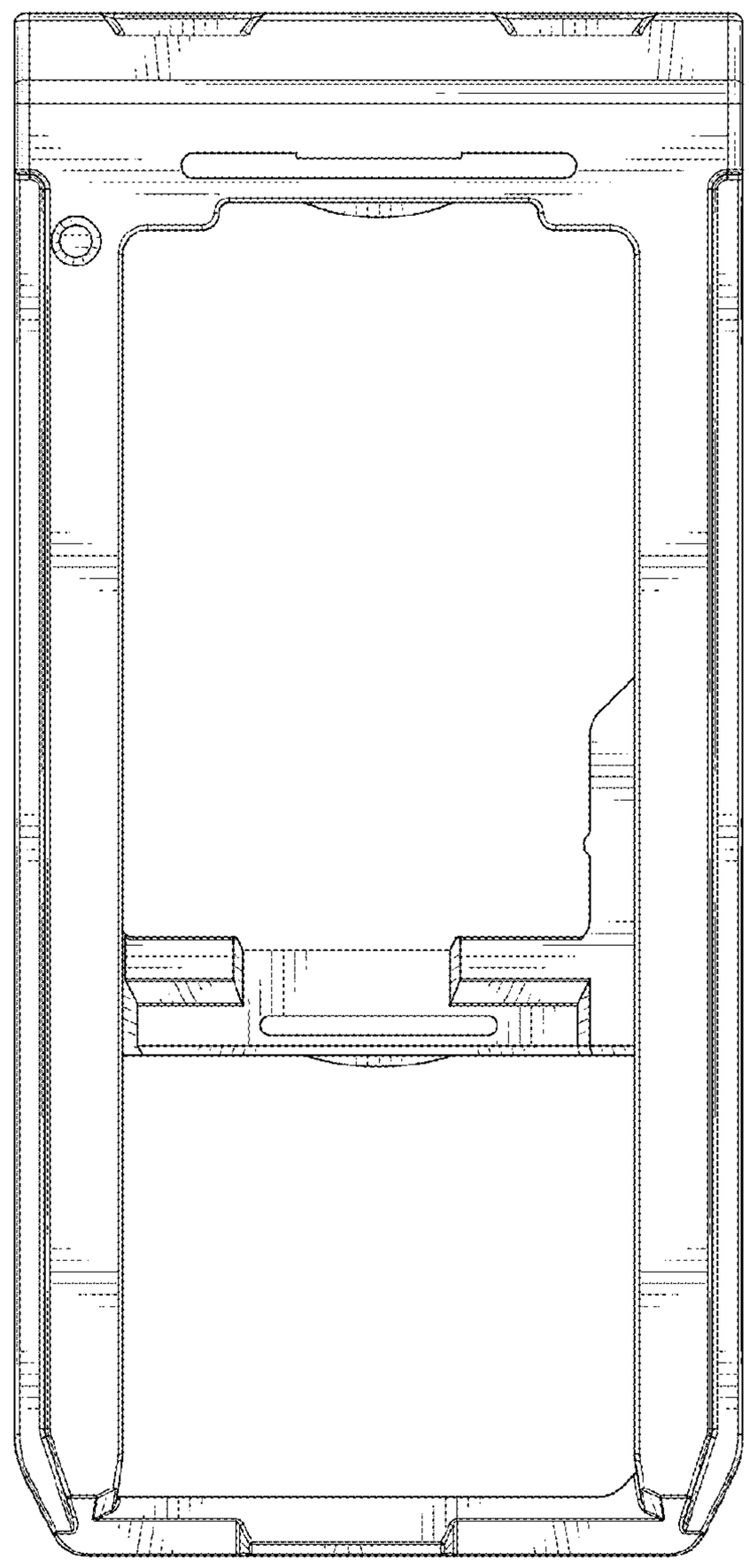

FIG. 6

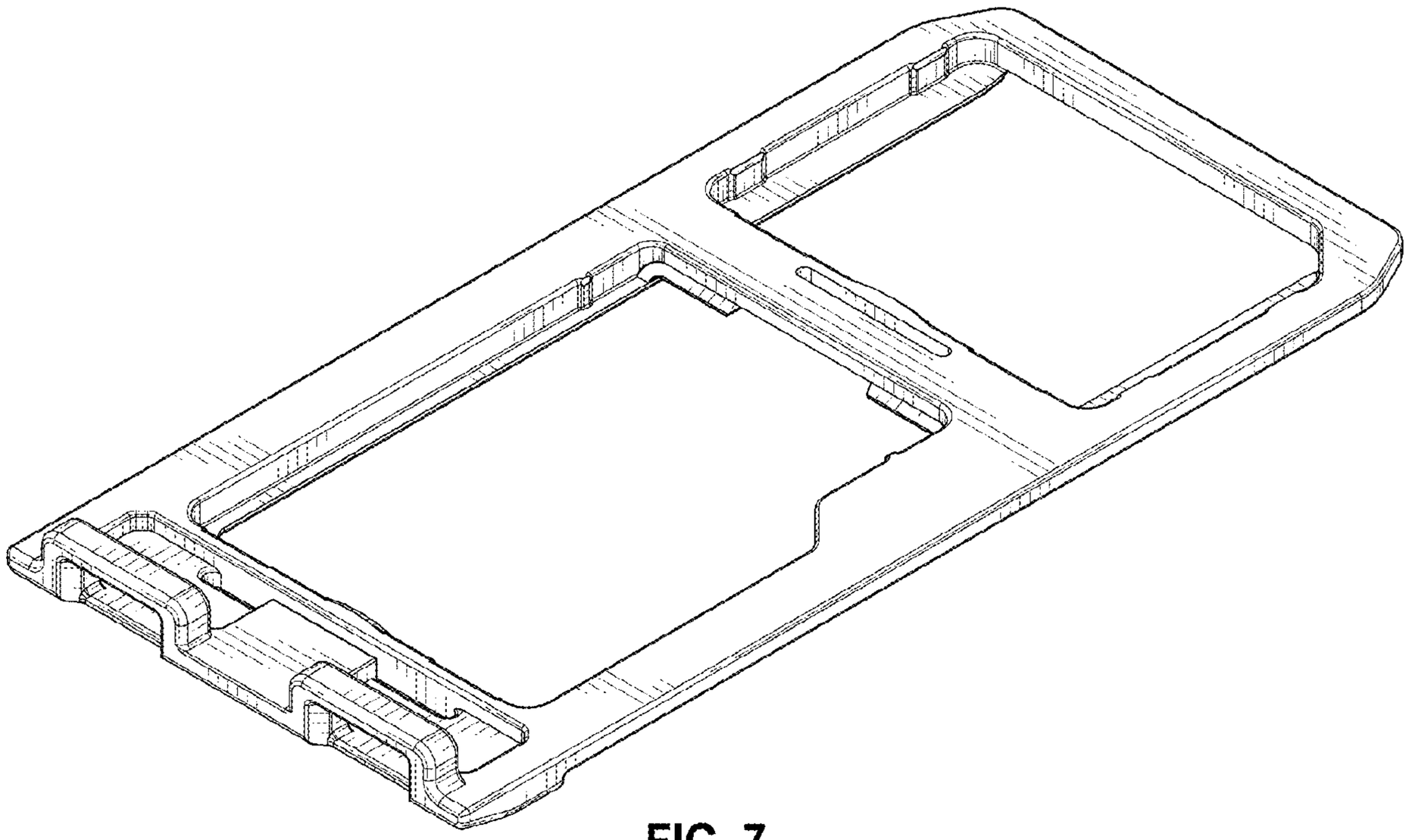

FIG. 7

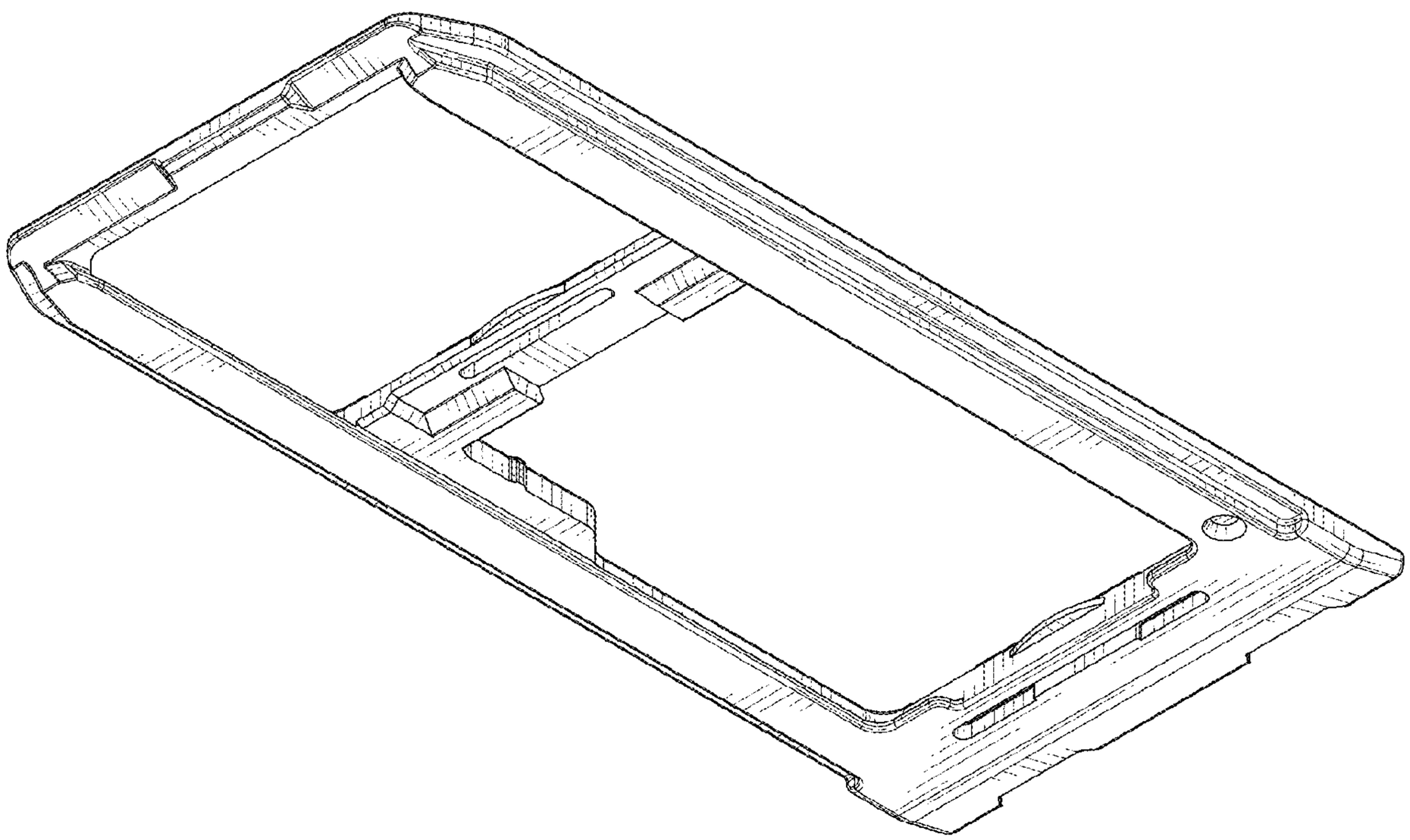

FIG. 8

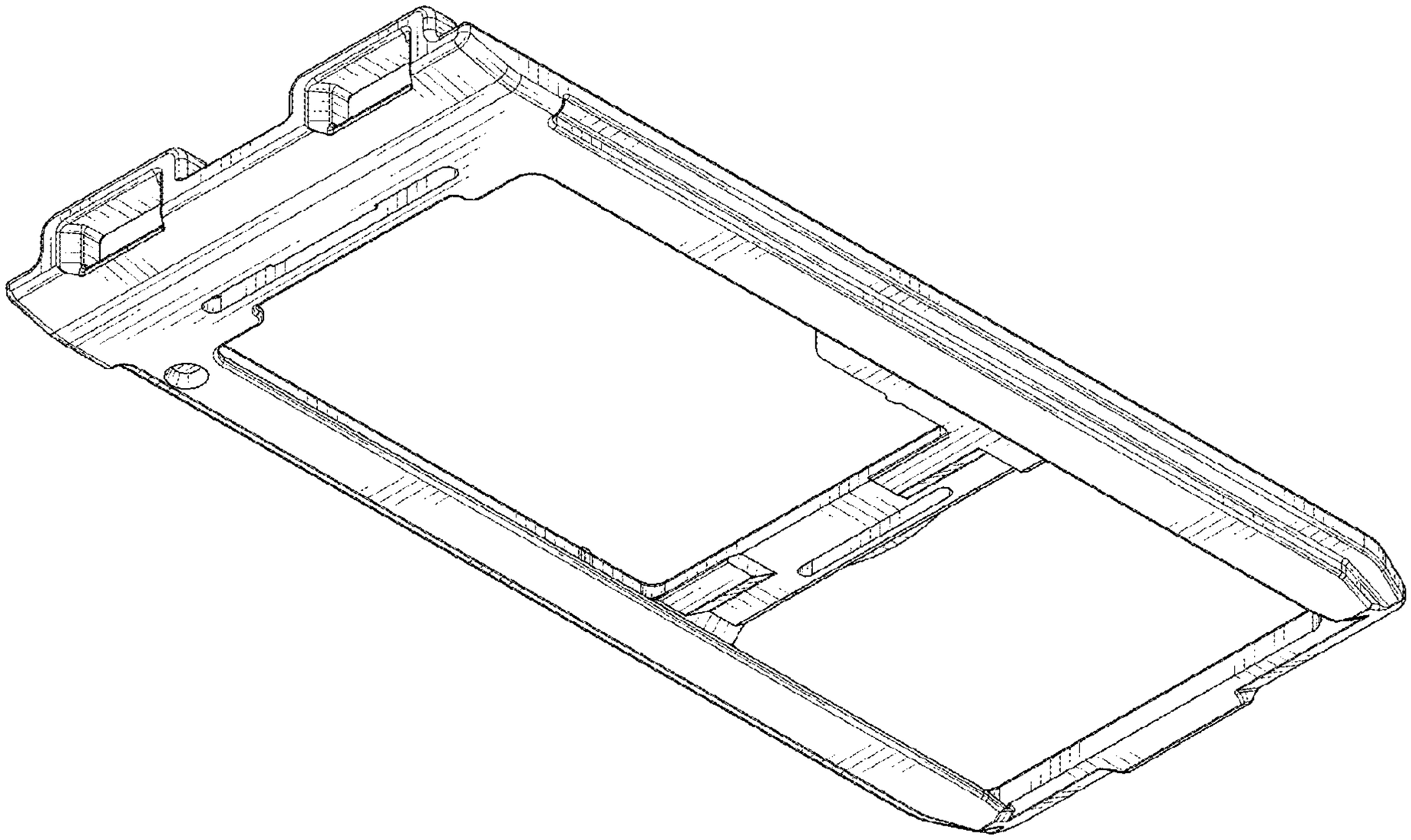

FIG. 9

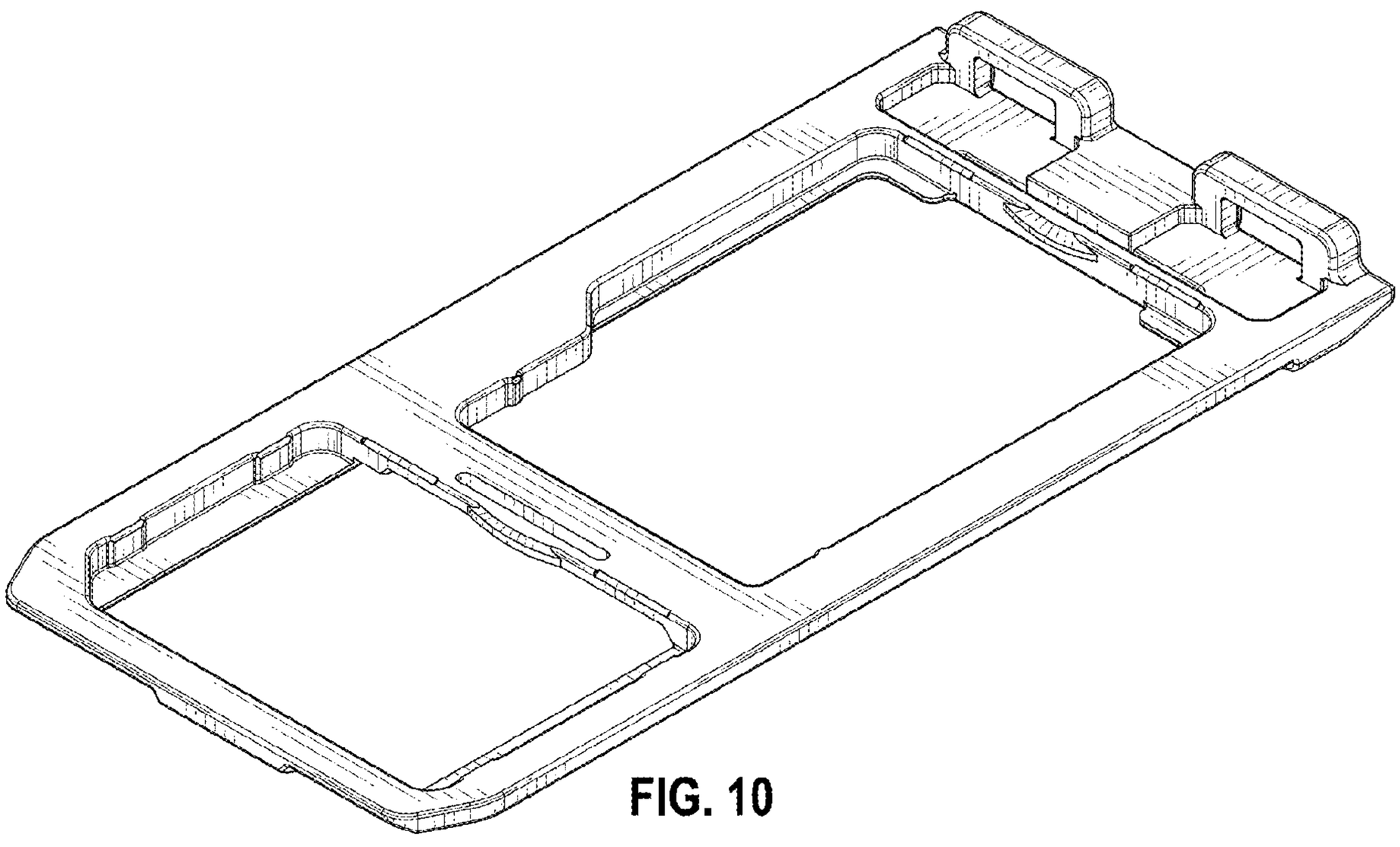

FIG. 10