US00D958517S

# (12) United States Design Patent

Anderson

(10) Patent No.: US D958,517 S
(45) Date of Patent: ** Jul. 26, 2022

(54) **VARIABLE HEIGHT CANOPY**

(71) Applicant: **Anderson Golf LLC**, Pinehurst, NC (US)

(72) Inventor: **Daren Anderson**, Pinehurst, NC (US)

(73) Assignee: **Anderson Golf LLC**, Pinehurst, NC (US)

(**) Term: **15 Years**

(21) Appl. No.: **29/754,931**

(22) Filed: **Oct. 15, 2020**

(51) **LOC (13) Cl.** ..... **03-03**

(52) **U.S. Cl.**
USPC ..... **D3/10**

(58) **Field of Classification Search**
USPC ..... D3/5–17; D13/101–107, 133, 154; D6/708, 708.2, 708.23; D20/8
CPC ..... A45B 17/00; A45B 23/00; A45B 3/00; E04H 12/2238; A47F 5/00
See application file for complete search history.

(56) **References Cited**

U.S. PATENT DOCUMENTS

2,554,887 A * 5/1951 Tricarico ..... E04H 12/2215 52/165
4,214,770 A * 7/1980 Agins ..... A45B 3/00 135/66

(Continued)

FOREIGN PATENT DOCUMENTS

CN 305329382 * 9/2019

OTHER PUBLICATIONS

Homedepot.com, Site visited Feb. 23, 2022, Costway Aluminum Beach Umbrella, Oldest review Aug. 14, 2020, https://www.homedepot.com/p/Costway-6-5-ft-Aluminum-Beach-Umbrella-Sun-Shade-Tilt-in-Blue-OP70314BL/314244295 (Year: 2020).*

(Continued)

*Primary Examiner* — Brett Miller
*Assistant Examiner* — Jessica M Gebhart
(74) *Attorney, Agent, or Firm* — Offit Kurman, P.A.; Steven Scott Lloyd

(57) **CLAIM**

The ornamental design of a variable height canopy, as shown and described in the drawings and specification.

**DESCRIPTION**

FIG. **1** is a top front isometric view of a new design for a variable height canopy.
FIG. **2** is a bottom front isometric view of the design of FIG. **1**.
FIG. **3** is a front view of the design of FIG. **1**.
FIG. **4** is a rear view of the design of FIG. **1**.
FIG. **5** is a left view of the design of FIG. **1**.
FIG. **6** is a right view of the design of FIG. **1**.
FIG. **7** is a top view of the design of FIG. **1**.
FIG. **8** is a bottom view of the design of FIG. **1**.
FIG. **9** is a detailed enlarged section view taken from the lower portion of the design, as identified in FIG. **1**; and,
FIG. **10** is a detailed enlarged section view taken FIG. **2**, as identified in FIG. **2**.
The dash broken lines show portions of the variable height canopy that form no part of the claimed design. The dash-dot broken lines symbolize border lines for the enlarged section views of the variable height canopy and form no part of the claimed invention.
The solid waved lines shown on the pole of the variable height canopy in FIGS. **1-6** depict symbolic lines and form no part of the claimed design. Any portions within the symbolic breaks form no part of the claimed design.

**1 Claim, 10 Drawing Sheets**

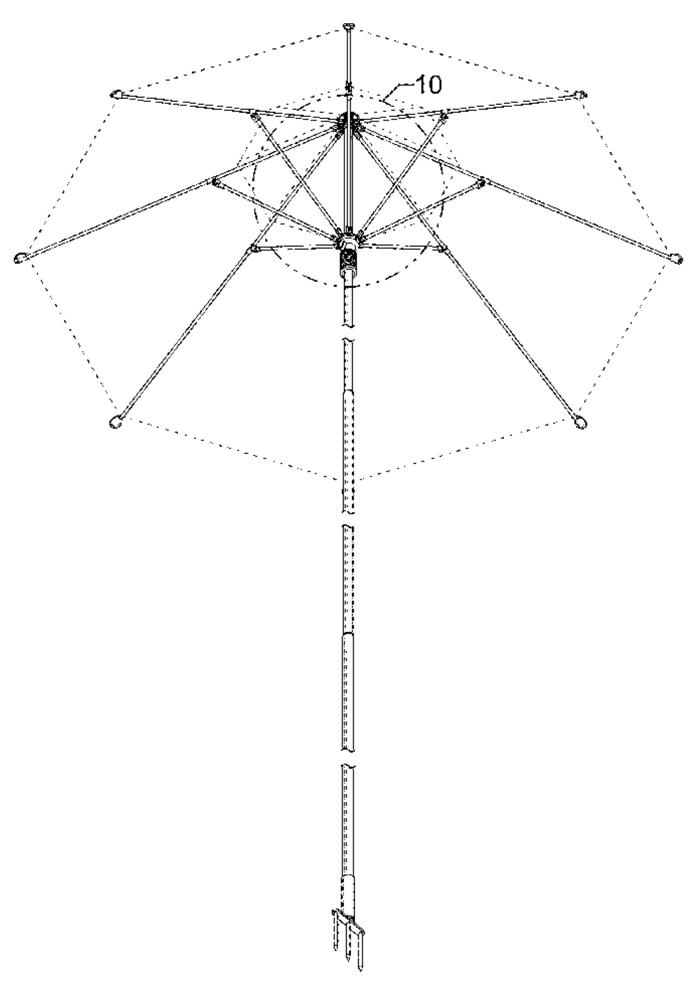

(56) **References Cited**

U.S. PATENT DOCUMENTS

| | | | | |
|---|---|---|---|---|
| 8,191,562 | B1 * | 6/2012 | Sampson | A45B 19/04 248/530 |
| 9,629,427 | B1 * | 4/2017 | Alm | A45B 25/00 |
| 2010/0044661 | A1 * | 2/2010 | Weiner | E01F 9/685 256/1 |
| 2010/0200724 | A1 * | 8/2010 | Kukuk | A45B 25/00 248/530 |
| 2018/0106062 | A1 * | 4/2018 | Brady | A45B 25/00 |

OTHER PUBLICATIONS

Amazon.com, Site visited Feb. 23, 2022, Besroy Beach Umbrella with sand anchor, First available Aug. 17, 2020, https://www.amazon.com/6-5ft-Portable-Beach-Umbrella-Telescoping/dp/B08ZN92KBY (Year: 2020).*

Amazon.com, Site visited Feb. 23, 2022, G4Free Adjustable Beach Umbrella, First available Sep. 9, 2020, https://www.amazon.com/G4Free-Adjustable-Umbrella-Universal-Stroller/dp/B08ZN8S24T (Year: 2020).*

* cited by examiner

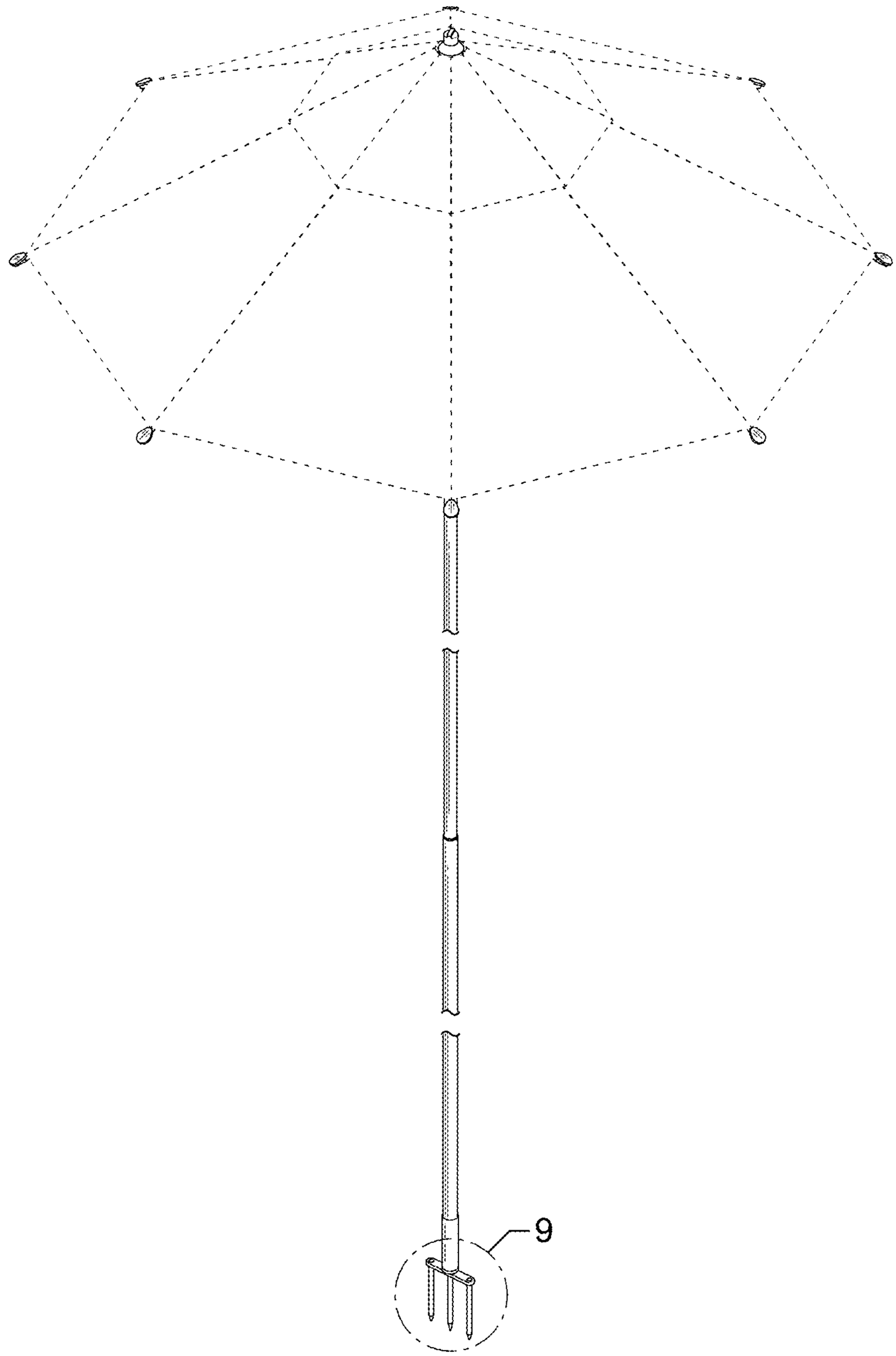


FIG. 1

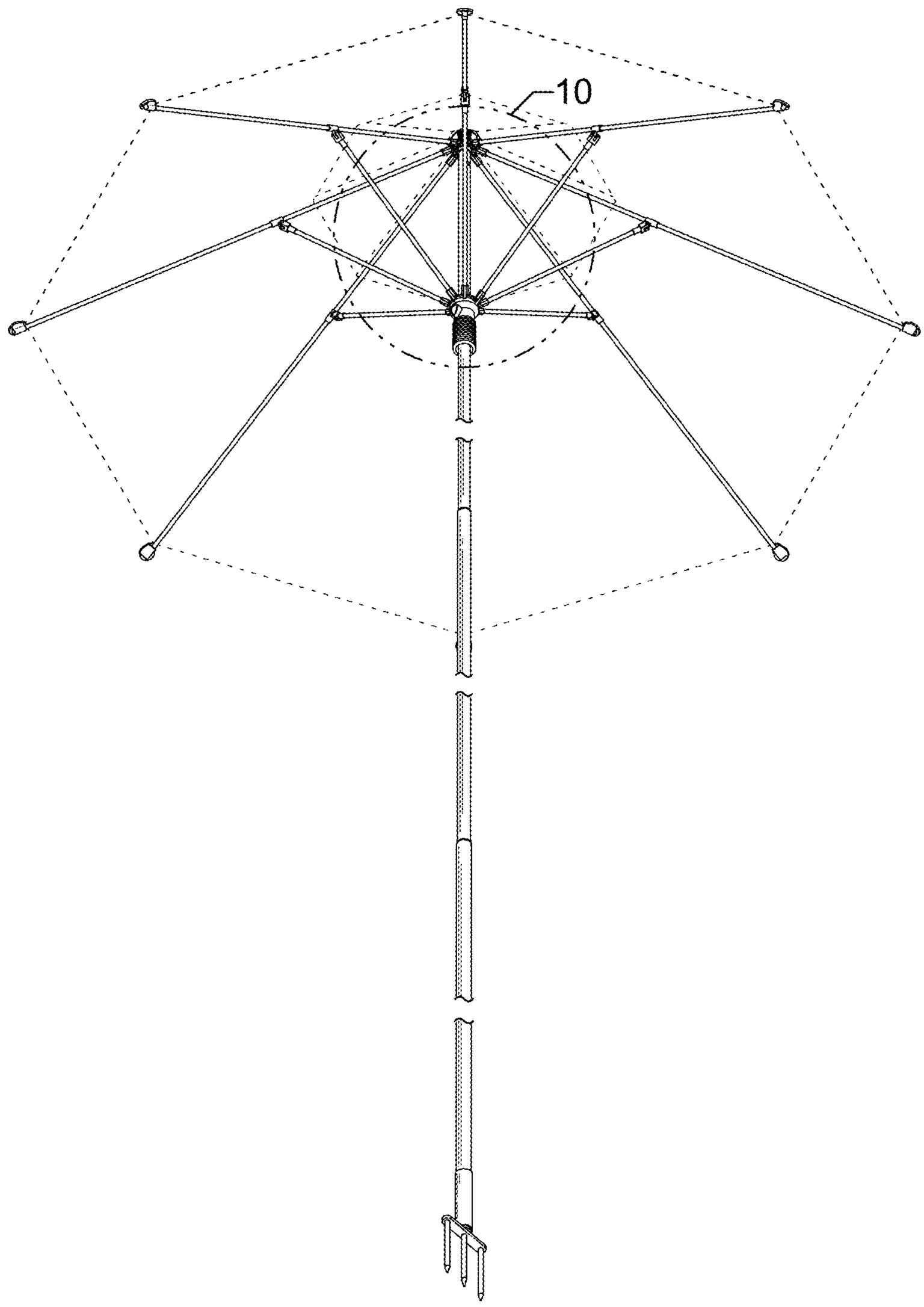


FIG. 2

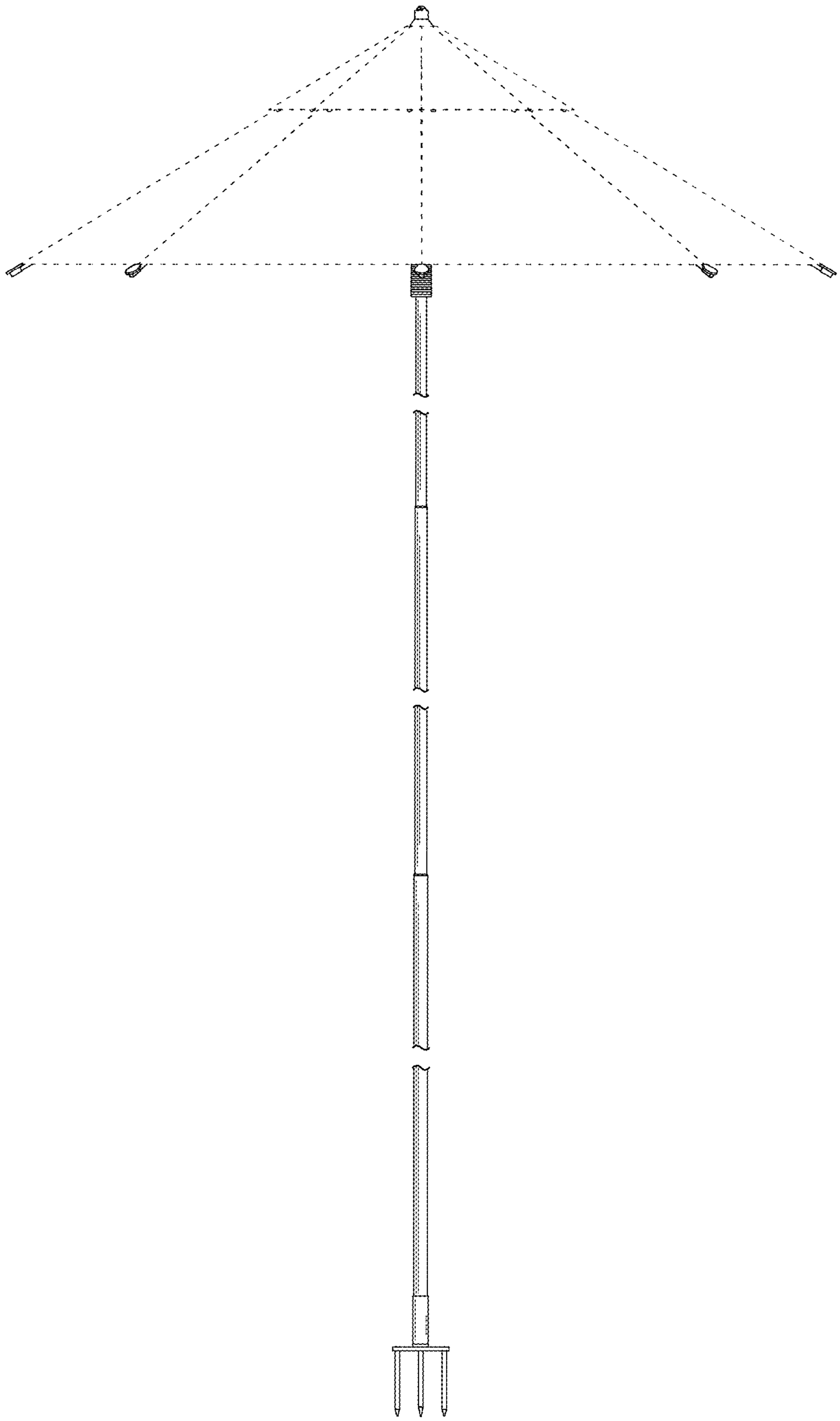

FIG. 3

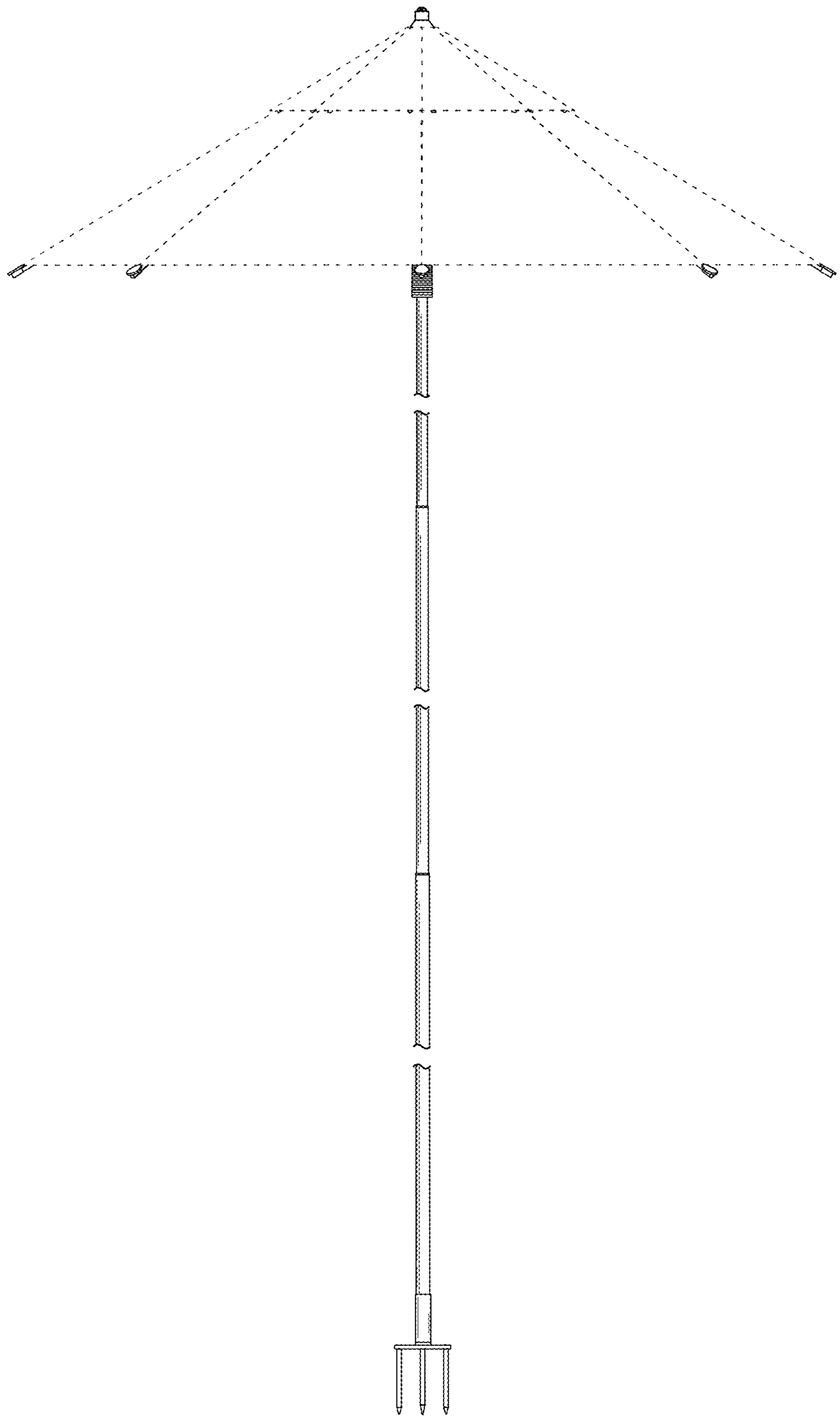

FIG. 4

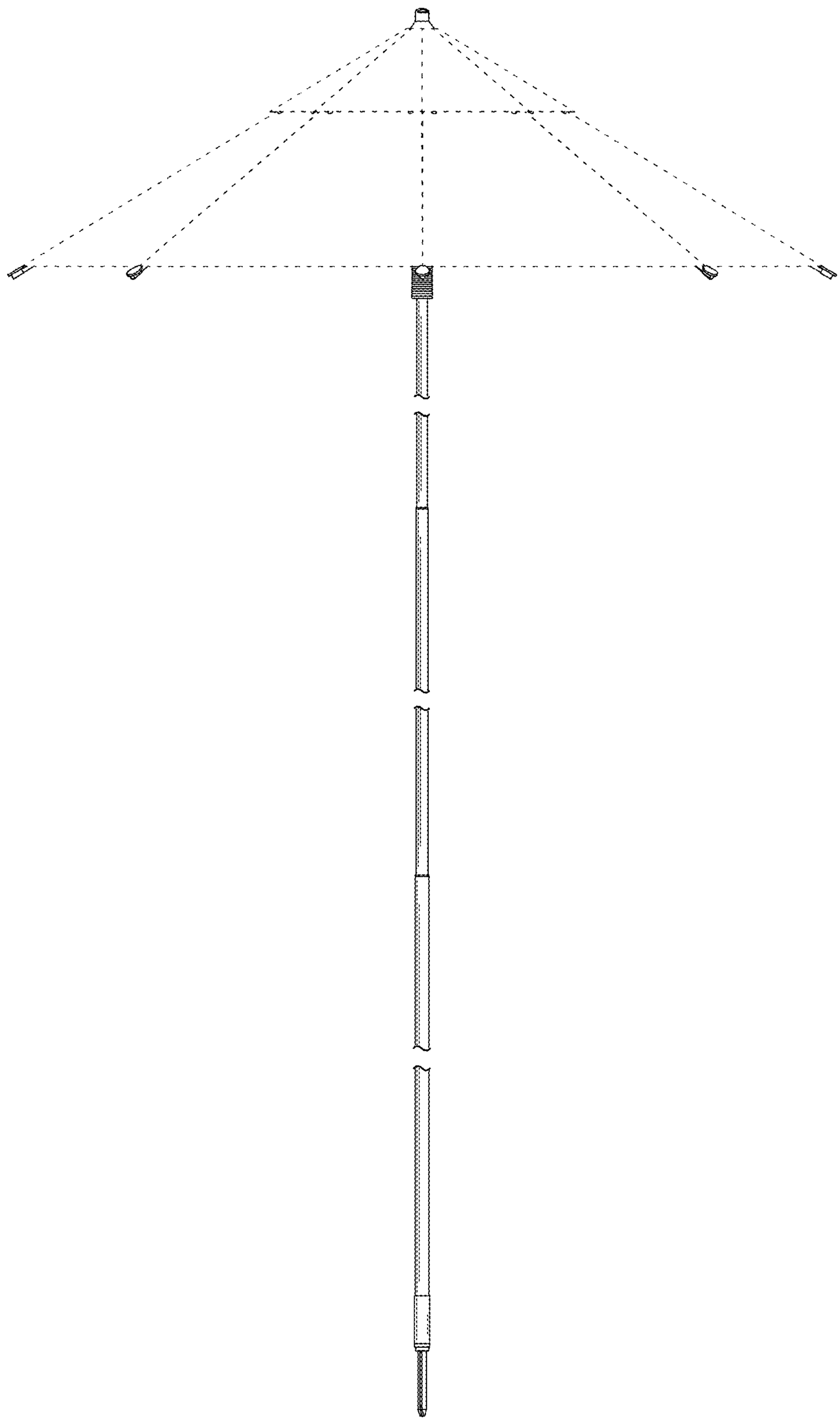

FIG. 5

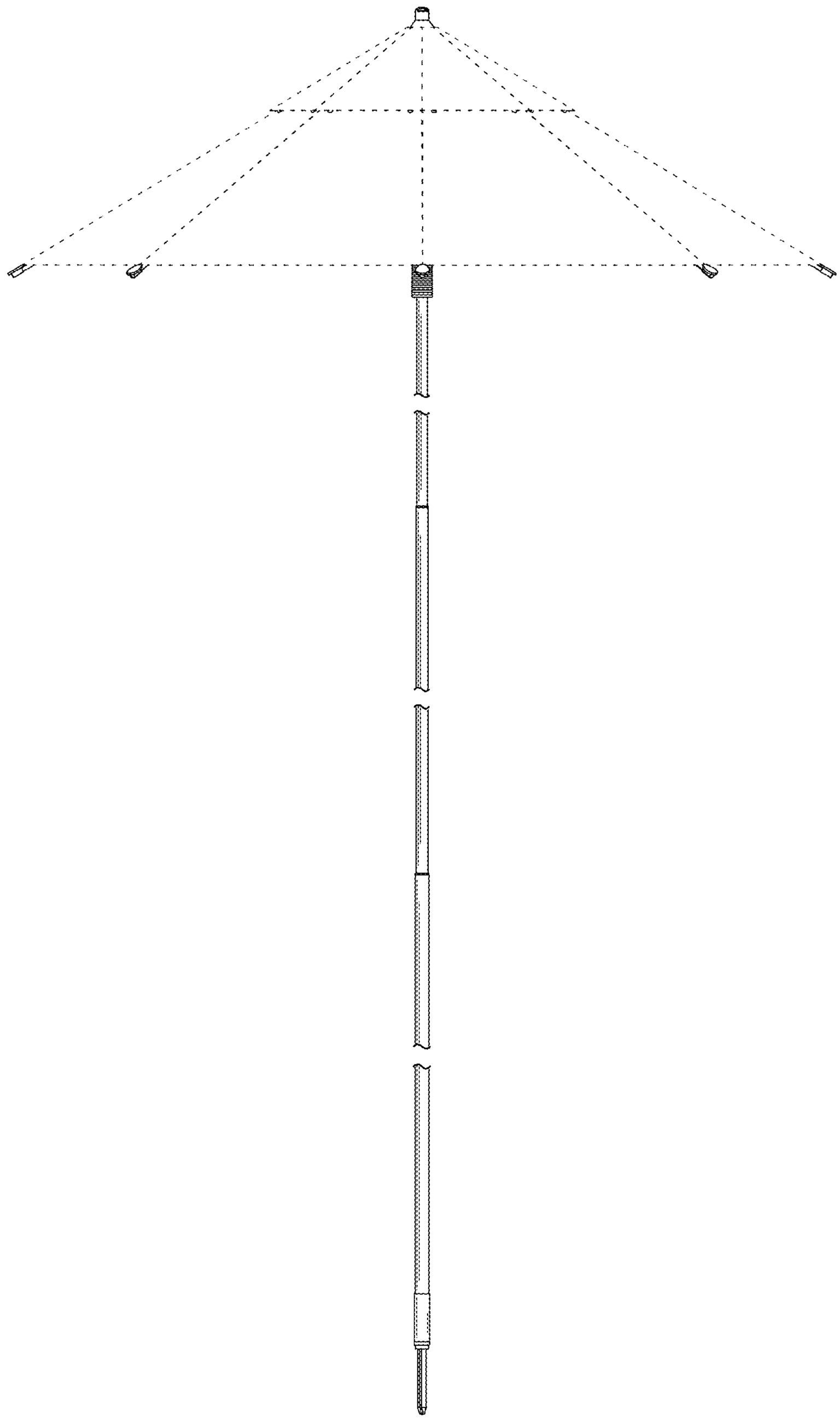

FIG. 6

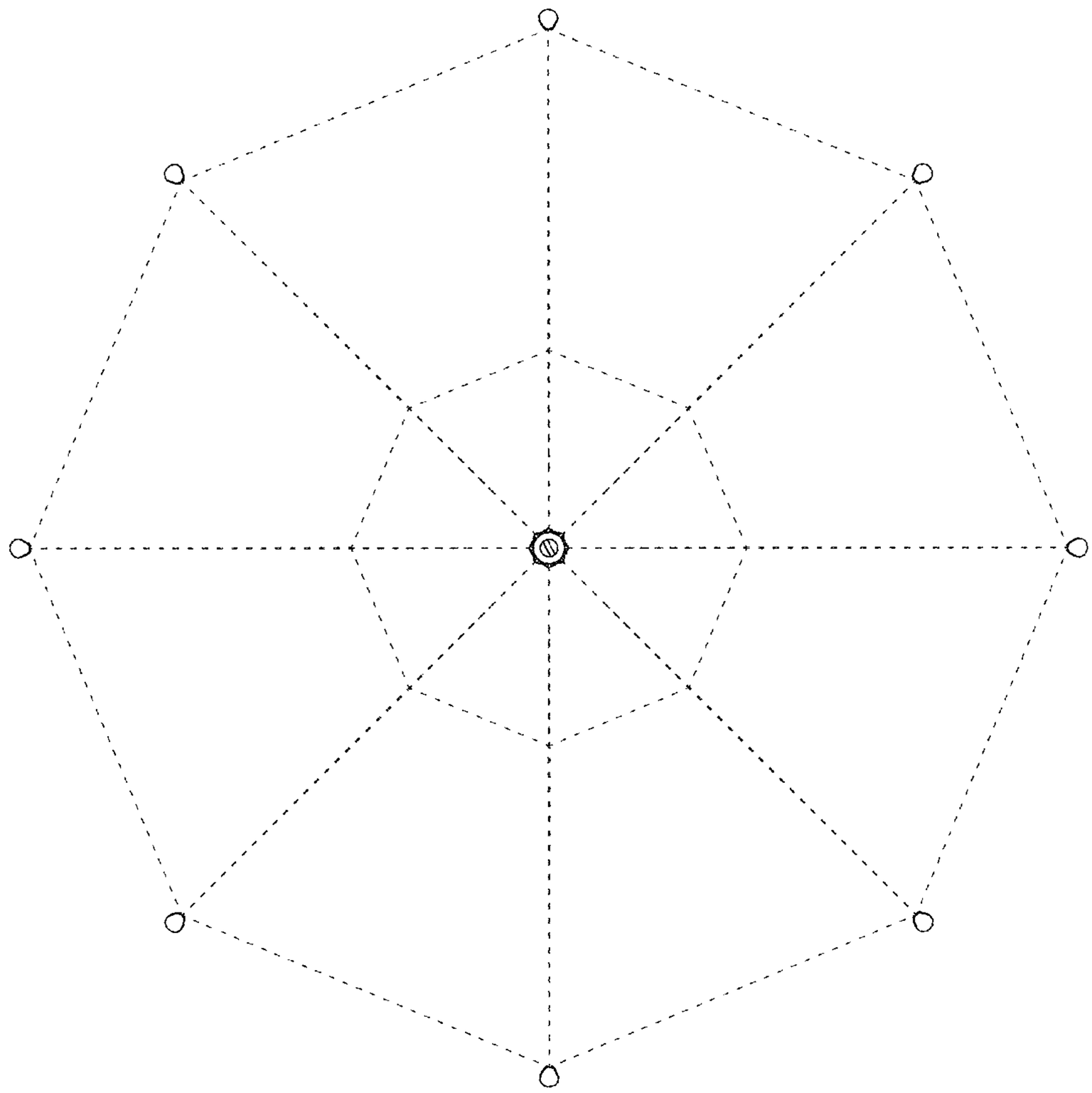

FIG. 7

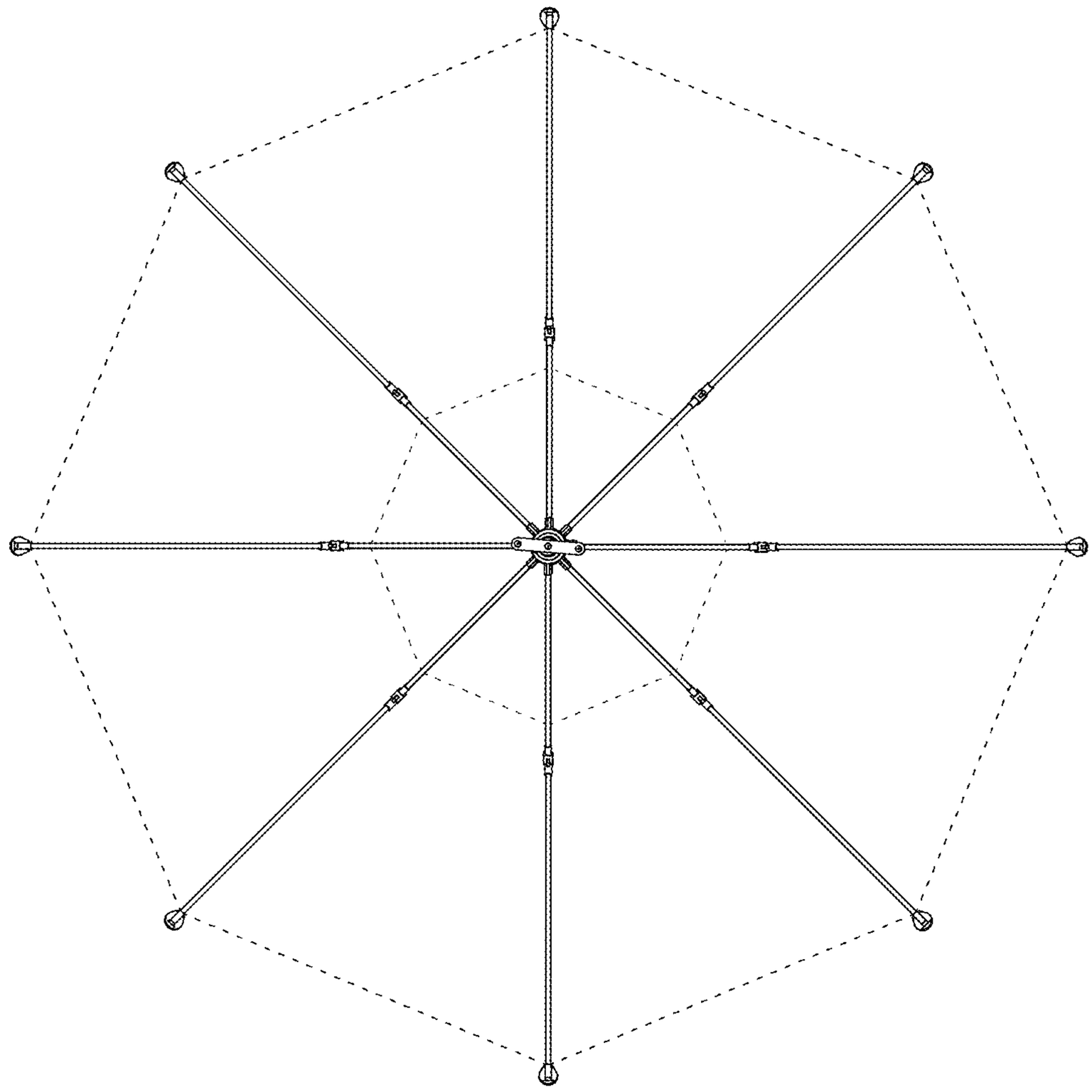

FIG. 8

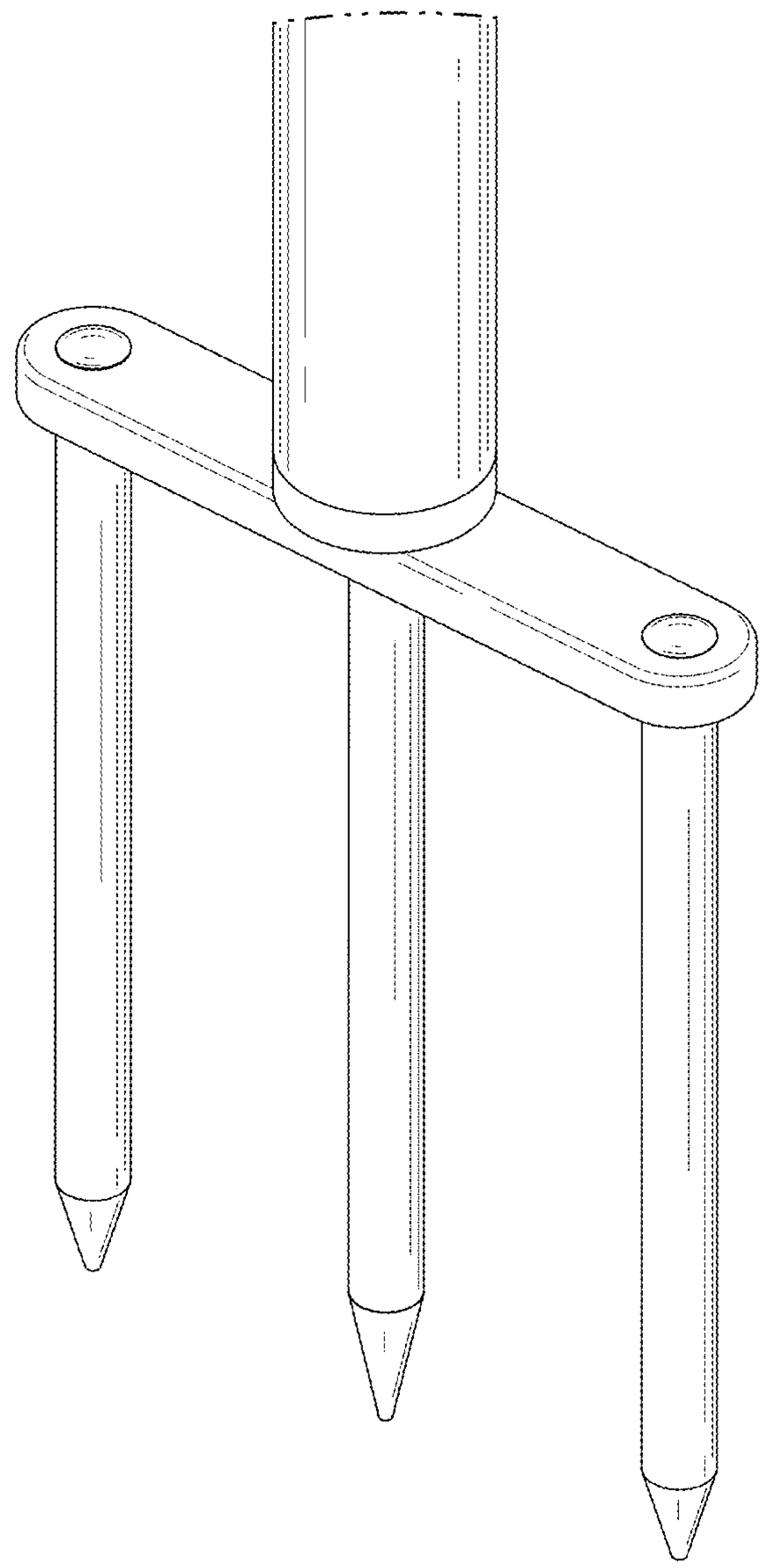

FIG. 9

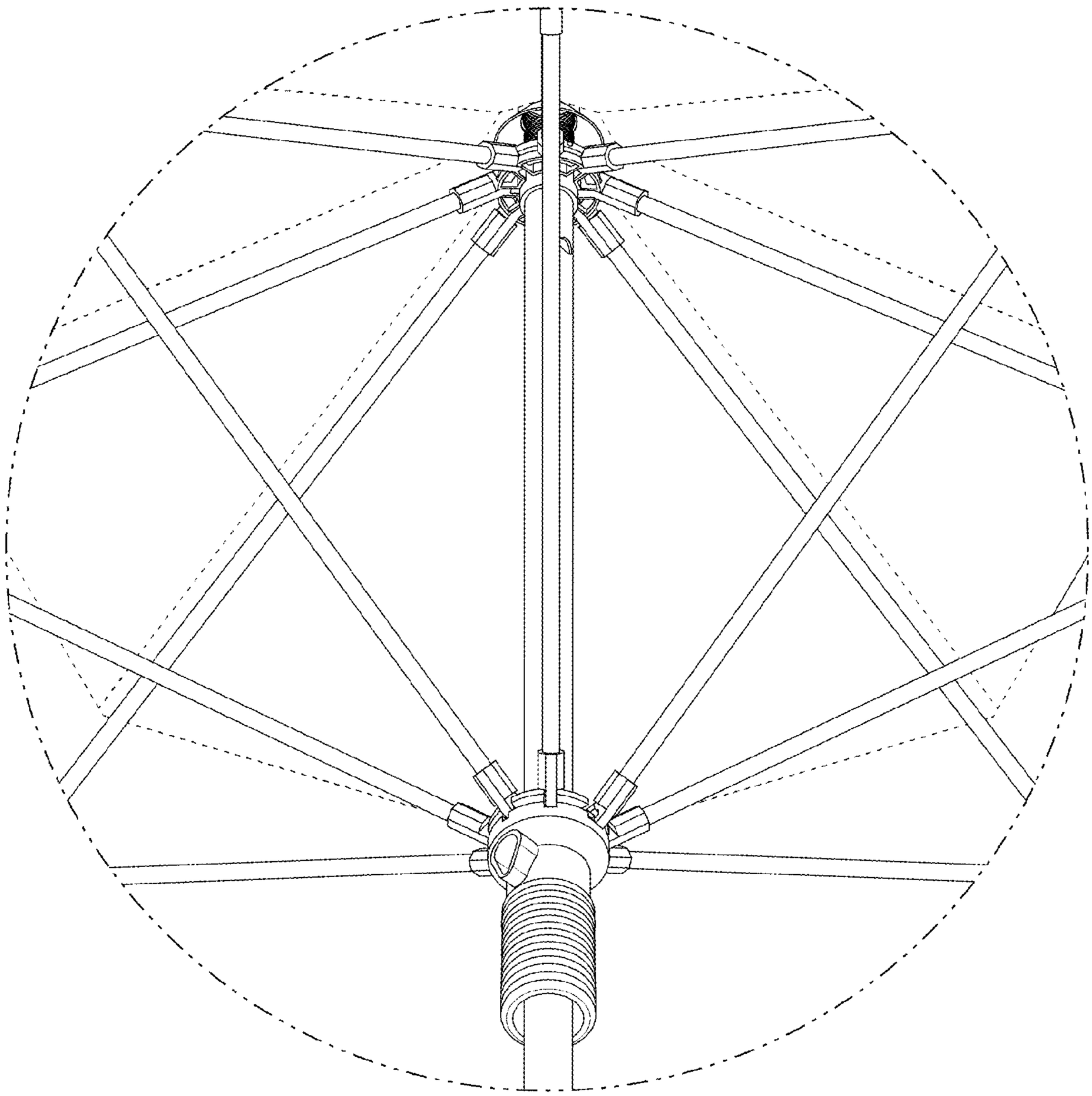

FIG. 10