US00D958147S

(12) United States Design Patent
Vautour

(10) Patent No.: US D958,147 S
(45) Date of Patent: ** Jul. 19, 2022

(54) **EARBUD HEADSET CASE**

(71) Applicant: **Skullcandy, Inc.**, Park City, UT (US)

(72) Inventor: **Eran Vautour**, San Francisco, CA (US)

(73) Assignee: **Skullcandy, Inc.**, Park City, UT (US)

(**) Term: **15 Years**

(21) Appl. No.: **29/788,398**

(22) Filed: **May 14, 2021**

(51) **LOC (13) Cl.** **14-02**

(52) **U.S. Cl.**
USPC **D14/440**; D13/108

(58) **Field of Classification Search**
USPC D14/440, 447, 250; 206/45.23, 320, 206/45.2; 361/679.55; 294/25; 224/218; D3/294; D9/420
CPC G06F 1/1628; G06F 1/1626; A47B 23/044
See application file for complete search history.

(56) **References Cited**

U.S. PATENT DOCUMENTS

D49,217	S *	6/1916	King	D3/265
D287,336	S	12/1986	Roehrig	
D393,367	S	4/1998	Riddle	
D548,970	S *	8/2007	Huang	D3/294
D586,557	S *	2/2009	Jalet	D3/294
9,013,145	B2	4/2015	Castillo et al.	
9,148,717	B2	9/2015	Shaffer	
D740,018	S	10/2015	Zhang et al.	
D772,572	S *	11/2016	Palmborg	D3/294
D772,840	S	11/2016	Forslund et al.	
9,502,913	B2	11/2016	Wilhelmsen et al.	
9,723,390	B2	8/2017	Shaffer	
9,769,558	B2	9/2017	Chandramohan et al.	
9,800,966	B2	10/2017	Knothe et al.	
9,854,344	B2	12/2017	Cheney et al.	
9,949,015	B1	4/2018	Panecki et al.	
9,961,431	B2	5/2018	McPeak et al.	

(Continued)

FOREIGN PATENT DOCUMENTS

EM	008049399-0002	7/2020

OTHER PUBLICATIONS

Skullcandy Indy Evo In-Ear Headphones True Wireless via Bluetooth, first available Feb. 27, 2020, amazon.co.uk [online], [site visited Mar. 19, 2021], Available at internet URL: https://www.amazon.co.uk/Skullcandy-Headphones-Wireless-Bluetooth-Resistant-Chill-Grey/dp/B084SBWWQ5 (Year: 2020).

(Continued)

Primary Examiner — Cynthia R Underwood
(74) *Attorney, Agent, or Firm* — TraskBritt

(57) **CLAIM**

The ornamental design for an earbud headset case, as shown and described.

DESCRIPTION

FIG. **1** is a rear perspective view of an earbud headset case according to my new design;
FIG. **2** is front perspective view of the earbud headset case of FIG. **1**;
FIG. **3** is a front view of the earbud headset case shown in FIG. **1**;
FIG. **4** is a rear view of the earbud headset case shown in FIG. **1**;
FIG. **5** is a left side view of the earbud headset case shown in FIG. **1**;
FIG. **6** is right side view of the earbud headset case shown in FIG. **1**;
FIG. **7** is top view of the earbud headset case shown in FIG. **1**; and,
FIG. **8** is a bottom view of the earbud headset case shown in FIG. **1**.
The broken lines in FIGS. **1-8** illustrate unclaimed subject matter and do not form any part of the claimed design.

1 Claim, 7 Drawing Sheets

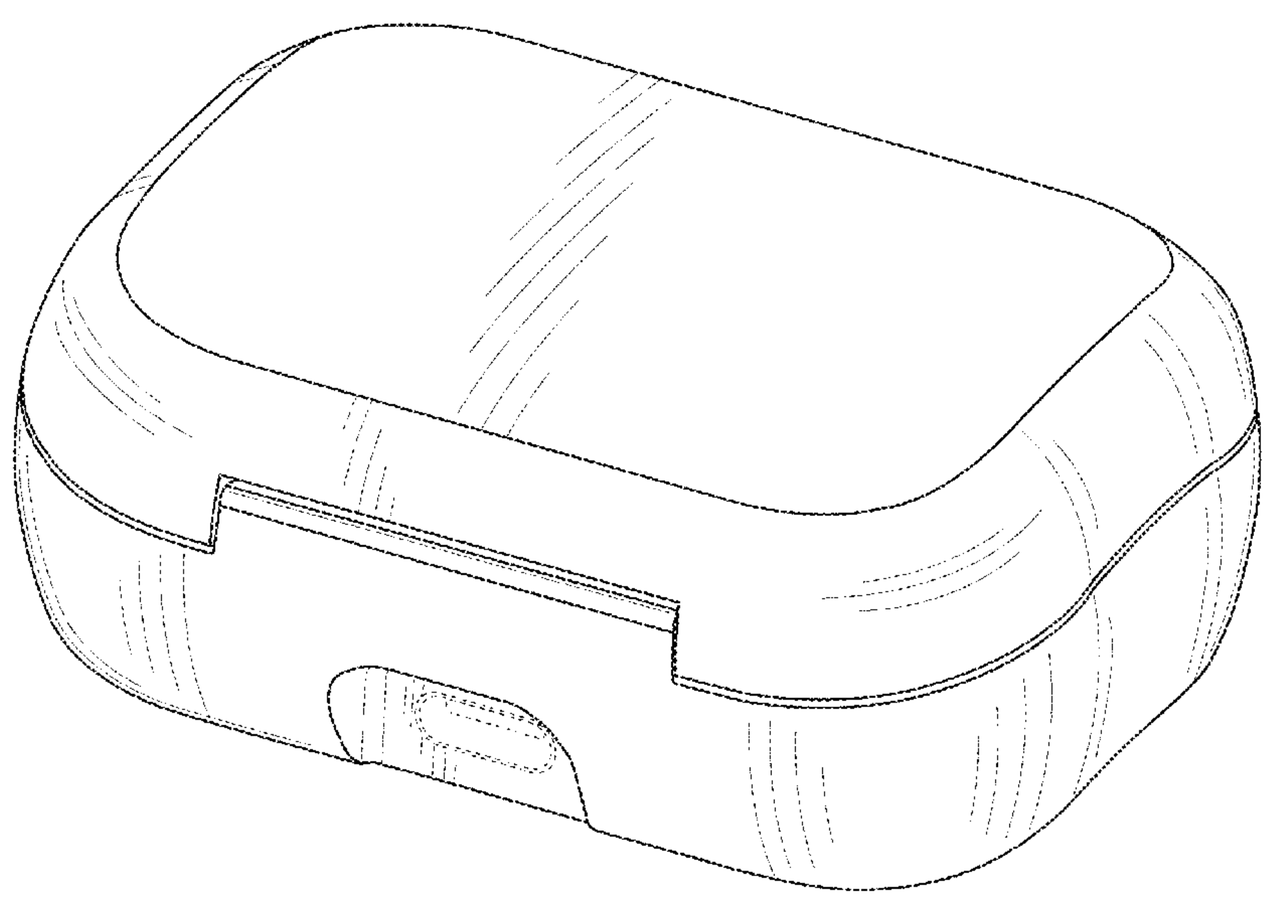

(56) **References Cited**

U.S. PATENT DOCUMENTS

9,961,433	B2		5/2018	Chawan et al.	
9,967,648	B2		5/2018	Albonico et al.	
9,967,649	B2		5/2018	Chandramohan et al.	
9,967,650	B2		5/2018	Chawan et al.	
10,009,678	B2		6/2018	Panecki et al.	
D826,152	S		8/2018	Christiansen	
D826,852	S		8/2018	Hung	
10,085,083	B2		9/2018	Rich et al.	
10,097,913	B2		10/2018	McPeak et al.	
D838,480	S	*	1/2019	Son	D3/294
10,182,282	B2		1/2019	McPeak et al.	
D841,580	S		2/2019	Bao	
10,219,598	B2		3/2019	Taylor et al.	
D873,217	S		1/2020	Zhang	
D878,048	S	*	3/2020	Wang	D3/294
D878,754	S		3/2020	Lee et al.	
D882,259	S		4/2020	Liu	
D882,262	S	*	4/2020	Zhang	D3/294
D886,454	S	*	6/2020	Williamson	D3/294
D886,455	S	*	6/2020	Williamson	D3/294
D887,351	S	*	6/2020	Bonahoom	D13/108
D891,434	S	*	7/2020	Lee	D14/440
D891,774	S	*	8/2020	Yu	D3/294
D893,184	S		8/2020	Liu	
D893,185	S		8/2020	Liu	
D897,678	S		10/2020	Koh	
D897,997	S	*	10/2020	Zhang	D14/223
D902,588	S		11/2020	Zhang	
D902,589	S	*	11/2020	Li	D3/294
D904,025	S		12/2020	Ma	
D904,755	S	*	12/2020	Birger	D3/201
D907,009	S		1/2021	Akana et al.	
D911,027	S		2/2021	Liang et al.	
D911,274	S	*	2/2021	Ding	D13/108
D911,944	S		3/2021	Gao	
D912,622	S		3/2021	Zhou	
D914,591	S		3/2021	Ganapathy et al.	
D917,389	S	*	4/2021	Ye	D13/108
D917,427	S	*	4/2021	Zheng	D14/223
D918,138	S	*	5/2021	Ma	D13/108
D918,579	S	*	5/2021	Youn	D3/273
D922,946	S	*	6/2021	Chen	D13/108
D927,465	S	*	8/2021	Wang	D14/223
D931,210	S	*	9/2021	Lee	D13/108
D944,524	S	*	3/2022	Laffon de Mazieres	D3/294
2008/0090622	A1	*	4/2008	Kim	H04M 1/05 455/573
2011/0186579	A1	*	8/2011	Bailey	B65D 25/54 220/795
2014/0376763	A1		12/2014	Stevinson	
2015/0245127	A1		8/2015	Shaffer	
2016/0173160	A1		6/2016	Gronewoller et al.	
2017/0040833	A1		2/2017	Wilhelmsen et al.	
2017/0064429	A1		3/2017	Knothe et al.	
2017/0094381	A1		3/2017	Panecki et al.	
2017/0094394	A1		3/2017	McPeak et al.	
2017/0215293	A1		7/2017	Merenda	
2021/0058687	A1		2/2021	Liu	

OTHER PUBLICATIONS

U.S. Design Application filed on Jan. 27, 2020, by Jacobs et al., titled "Earbud Headset Case", U.S. Appl. No. 29/722,198.

U.S. Provisional Application filed on Aug. 29, 2015, by Hirsch et al., titled "Smart Case Power Utilization Control System and Method", U.S. Appl. No. 62/211,768.

U.S. Design Application filed on Dec. 30, 2020, by MacDonald, titled "Earbud Headset Case", U.S. Appl. No. 29/652,890.

* cited by examiner

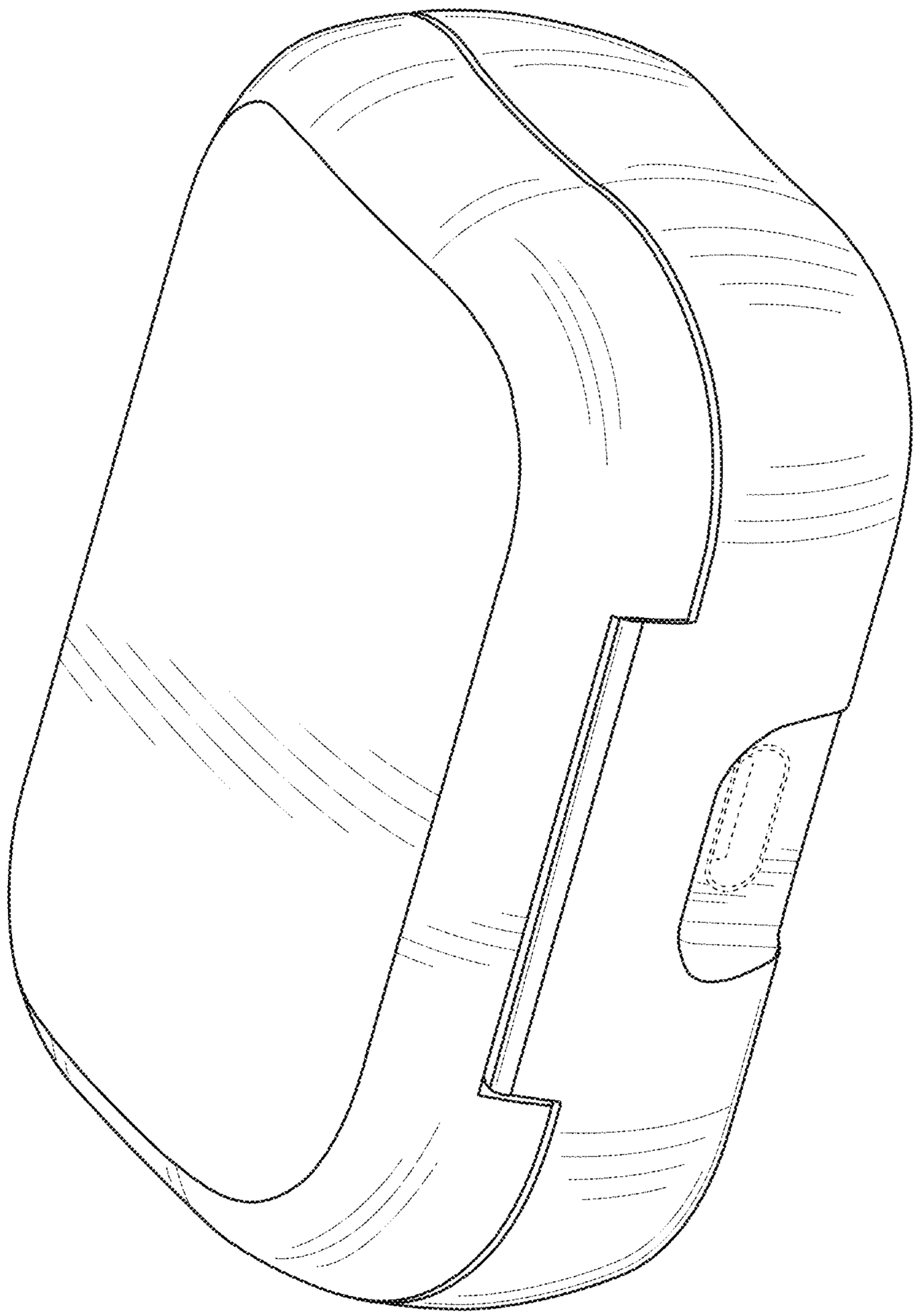

FIG. 1

FIG. 2

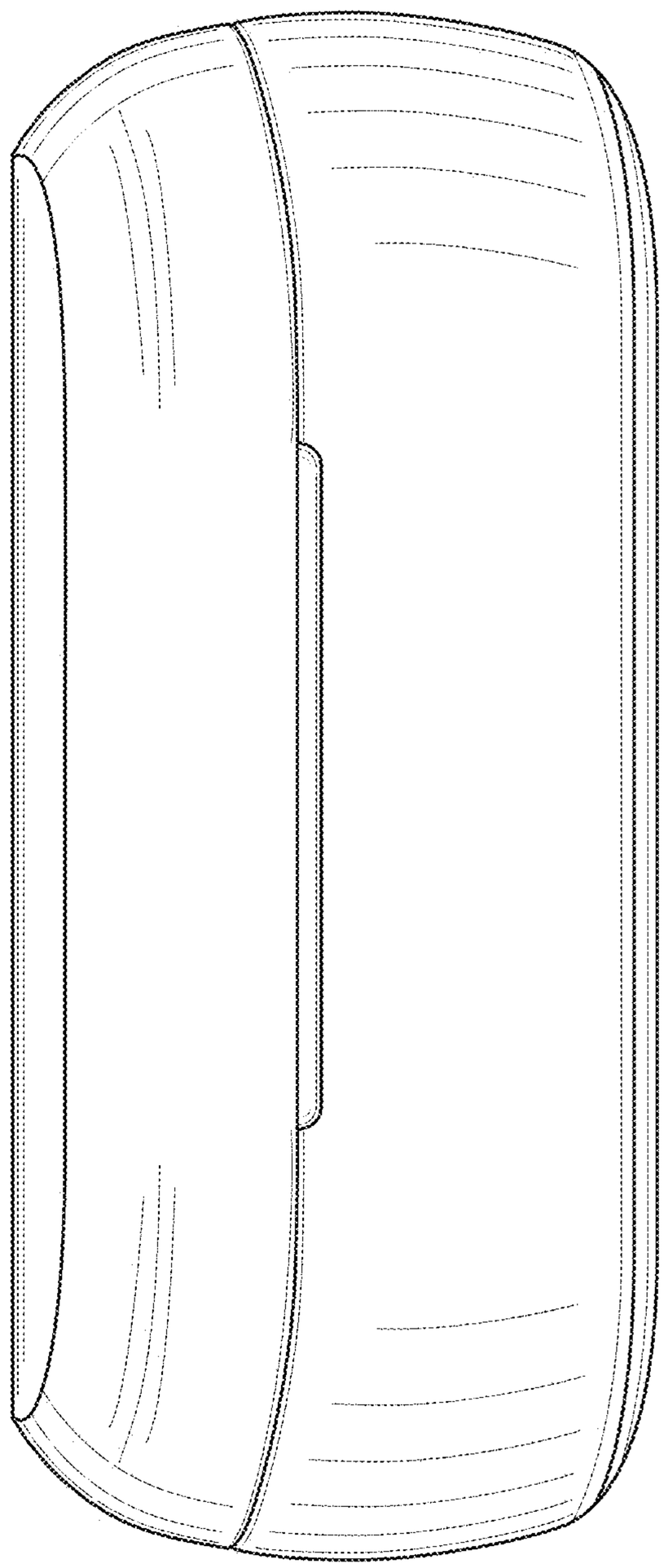

FIG. 3

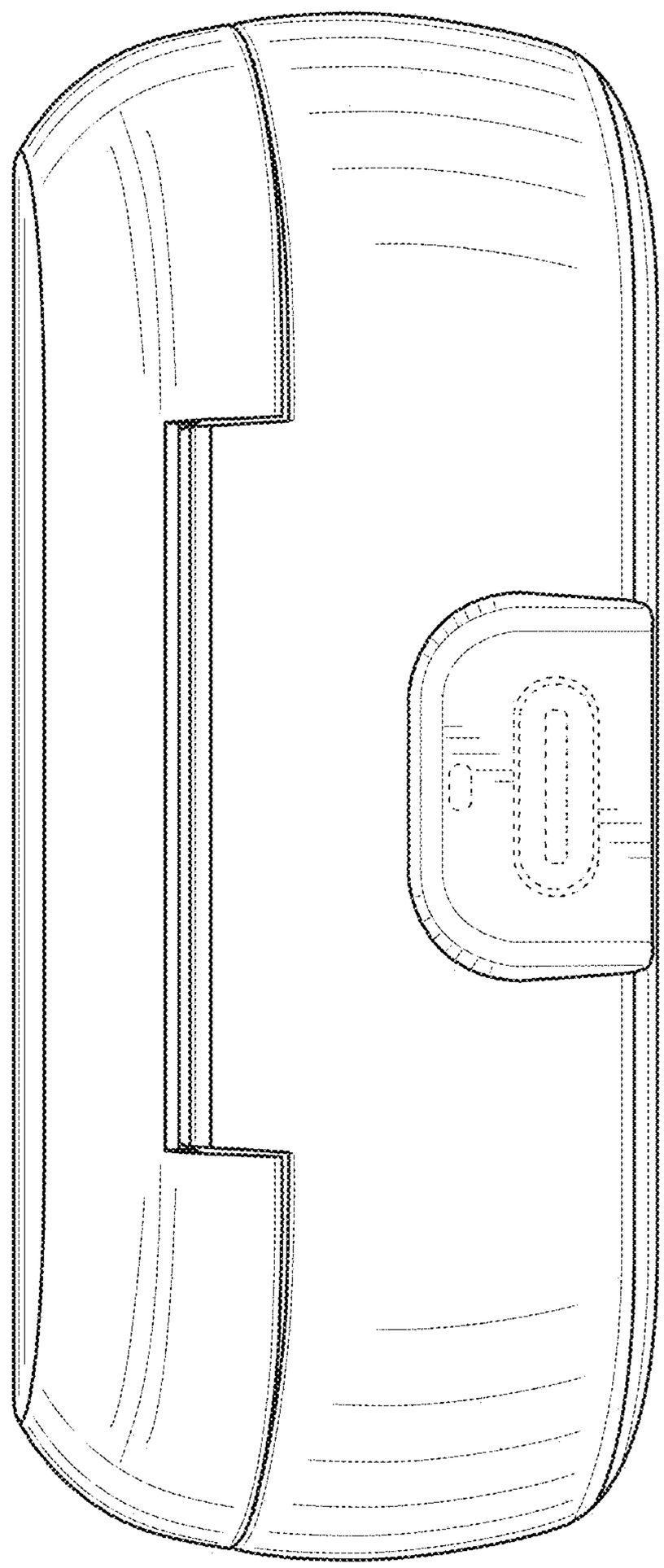

FIG. 4

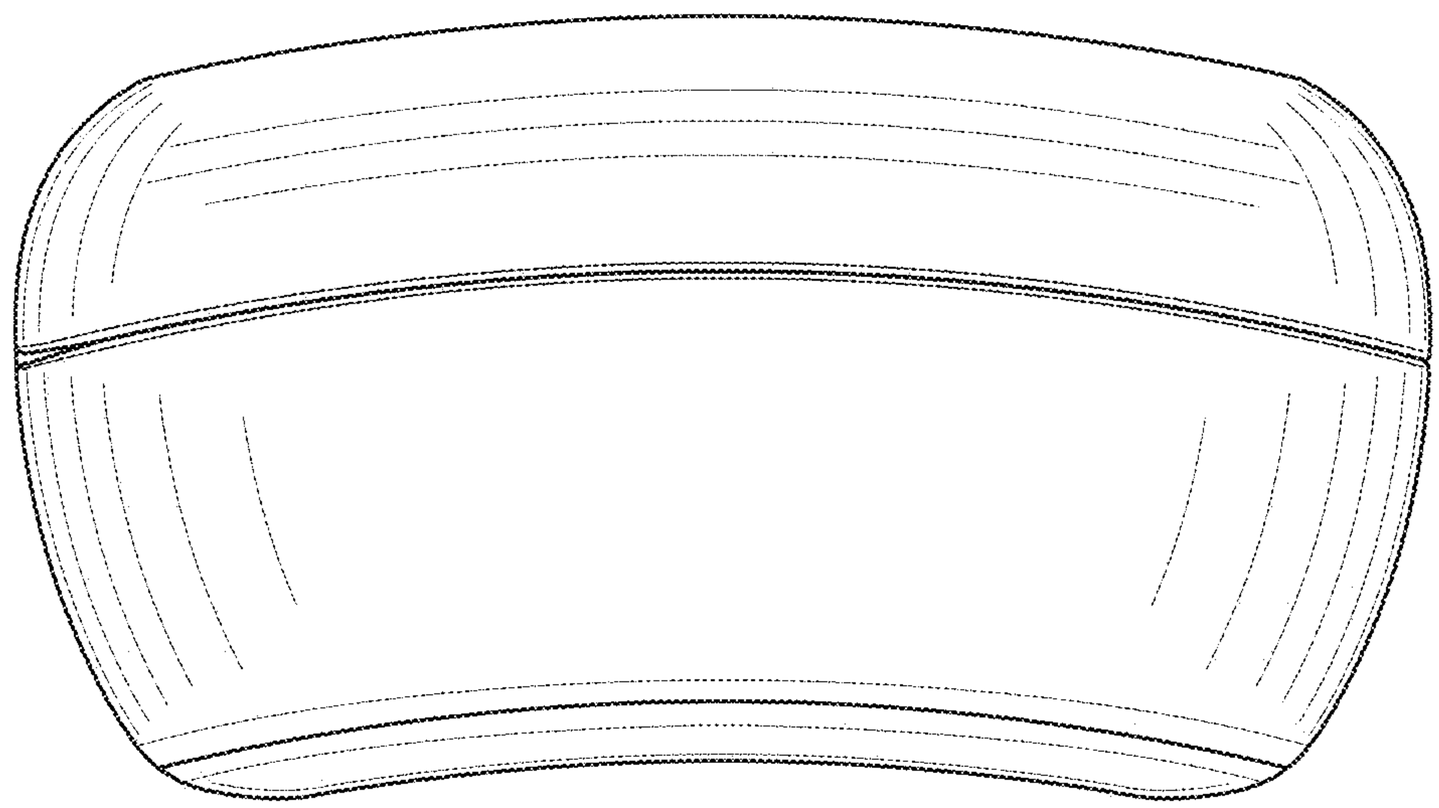

FIG. 5

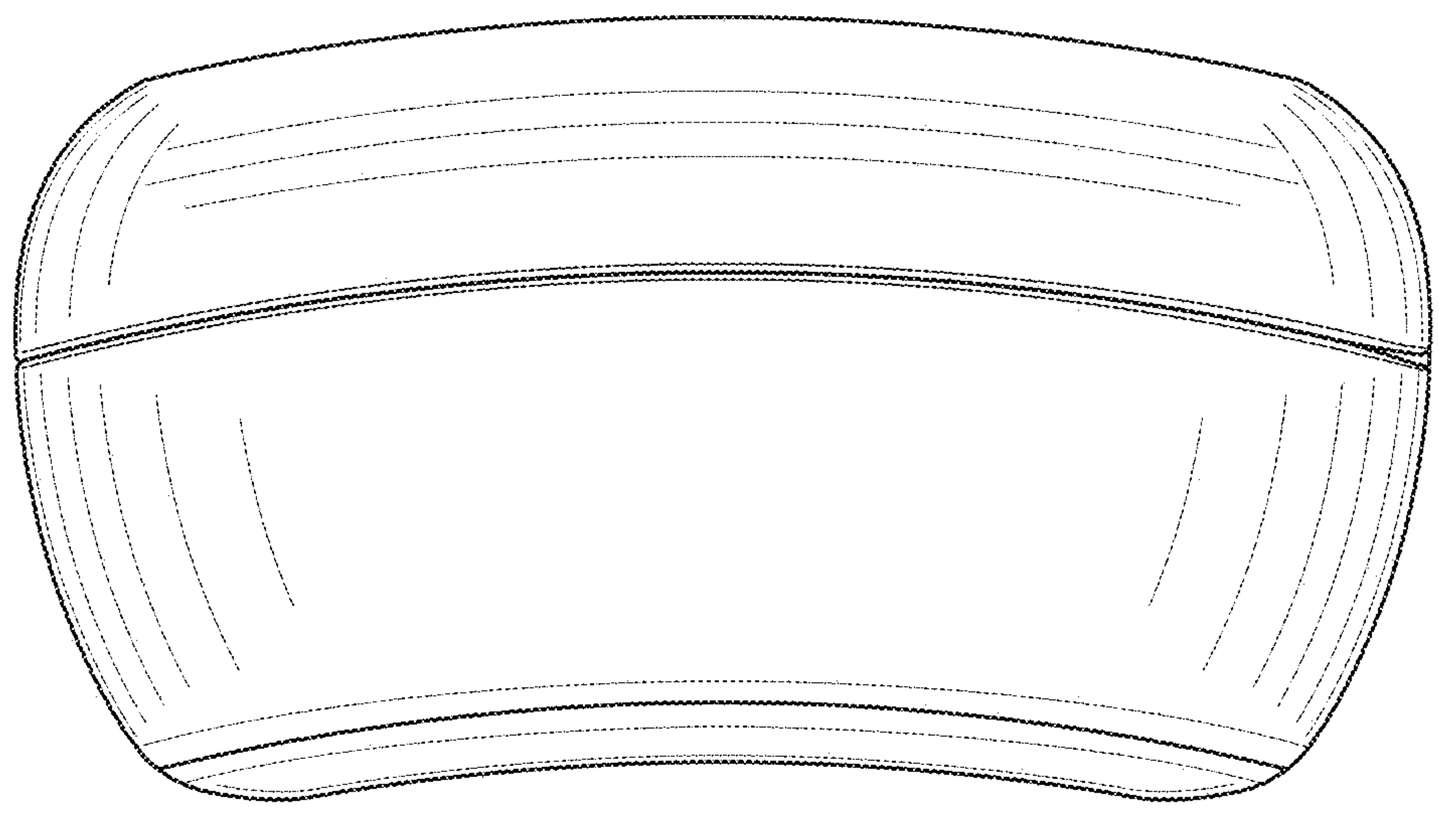

FIG. 6

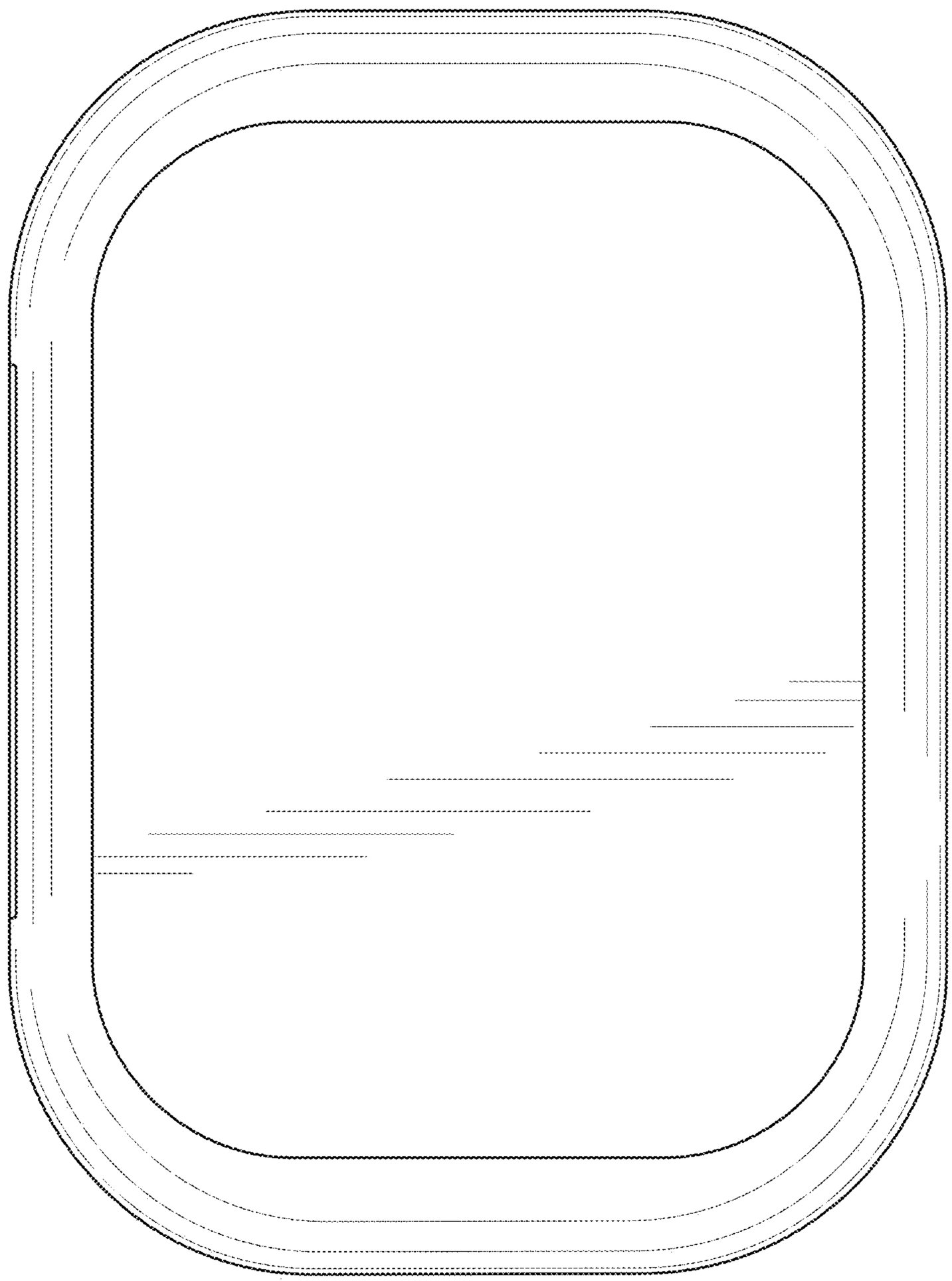

FIG. 7

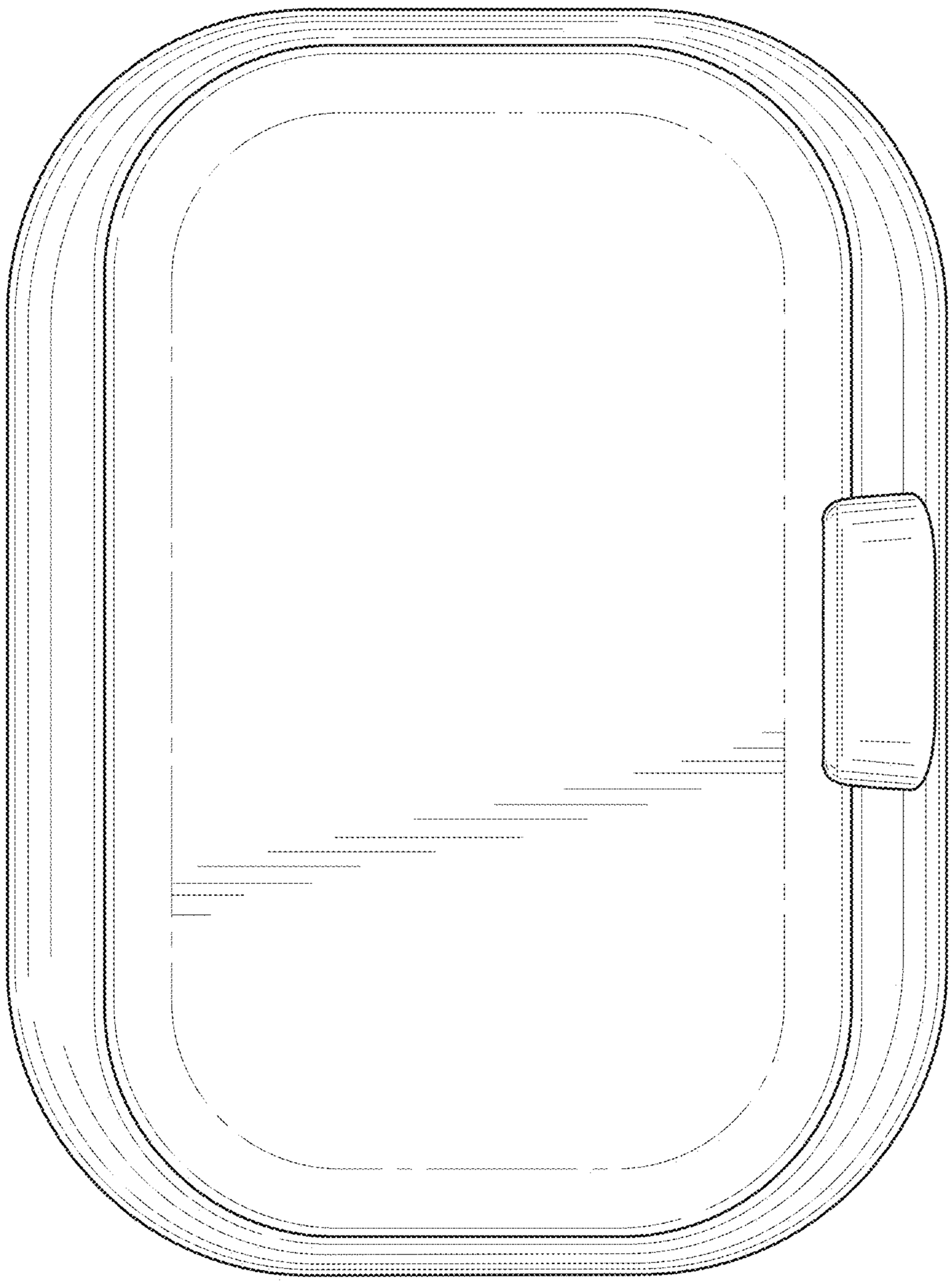

FIG. 8