US00D957352S

(12) United States Design Patent

Mack et al.

(10) Patent No.: US D957,352 S
(45) Date of Patent: ** Jul. 12, 2022

(54) **STRAIN RELIEF**

(71) Applicant: **BFLY Operations, Inc.**, Guilford, CT (US)

(72) Inventors: **Adam Mekeel Mack**, Half Moon Bay, CA (US); **Ryan Silvestri**, Guilford, CT (US); **Timothy A. Hyde**, Columbia, SC (US); **Neil Ferrier**, Greenville, SC (US); **Kevin Coss**, Irvine, CA (US); **David Elgena**, Orlando, FL (US); **Robert Schneider**, Killingworth, CT (US); **Jason Fischman**, Stamford, CT (US)

(73) Assignee: **BFLY Operations, Inc.**, Guilford, CT (US)

(**) Term: **15 Years**

(21) Appl. No.: **29/740,072**

(22) Filed: **Jun. 30, 2020**

(51) **LOC (13) Cl.** **13-03**

(52) **U.S. Cl.**
USPC **D13/156**; D13/133

(58) **Field of Classification Search**
USPC ... D13/133, 137.4, 138.1, 138.2, 139.7, 147, D13/153, 154, 156; D24/158, 160, 186, D24/187; D14/433
CPC H01R 4/70; H01R 13/627; H01R 13/6273; H01R 13/6275
See application file for complete search history.

(56) **References Cited**

U.S. PATENT DOCUMENTS

4,108,527 A *	8/1978	Douty	H01R 13/627 439/465
D357,898 S *	5/1995	Richards	D13/133
5,444,185 A *	8/1995	Tanaka	H01R 4/70 174/135

(Continued)

FOREIGN PATENT DOCUMENTS

CN	305760932 S	5/2020
JP	D1457814 S	12/2012

(Continued)

OTHER PUBLICATIONS

System Plus, Date: Apr. 21, 2020, [online], [site visited Dec. 8, 2021]. Available from internet, URL: https://www.systemplus.fr/reverse-costing-reports/butterfly-network-iq-cmut-sensor/ (Year: 2020).*

(Continued)

Primary Examiner — Shawn T Gingrich
Assistant Examiner — Bryan N. Melvin
(74) *Attorney, Agent, or Firm* — Wolf, Greenfield & Sacks, P.C.

(57) **CLAIM**

The ornamental design for a strain relief, as shown and described.

DESCRIPTION

FIG. **1** is a top, front, left side perspective view of a strain relief according to our new design;
FIG. **2** is a left side elevation view thereof;
FIG. **3** top plan view thereof;
FIG. **4** is a bottom plan view thereof;
FIG. **5** is a rear elevation view thereof;
FIG. **6** is a right side elevation view thereof; and,
FIG. **7** is a front elevation view thereof.
The broken lines represent portions of the strain relief that form no part of the claimed design.
The strain relief is shown with a symbolic break in its length. The appearance of any portion of the article between the break lines forms no part of the claimed design.

1 Claim, 2 Drawing Sheets

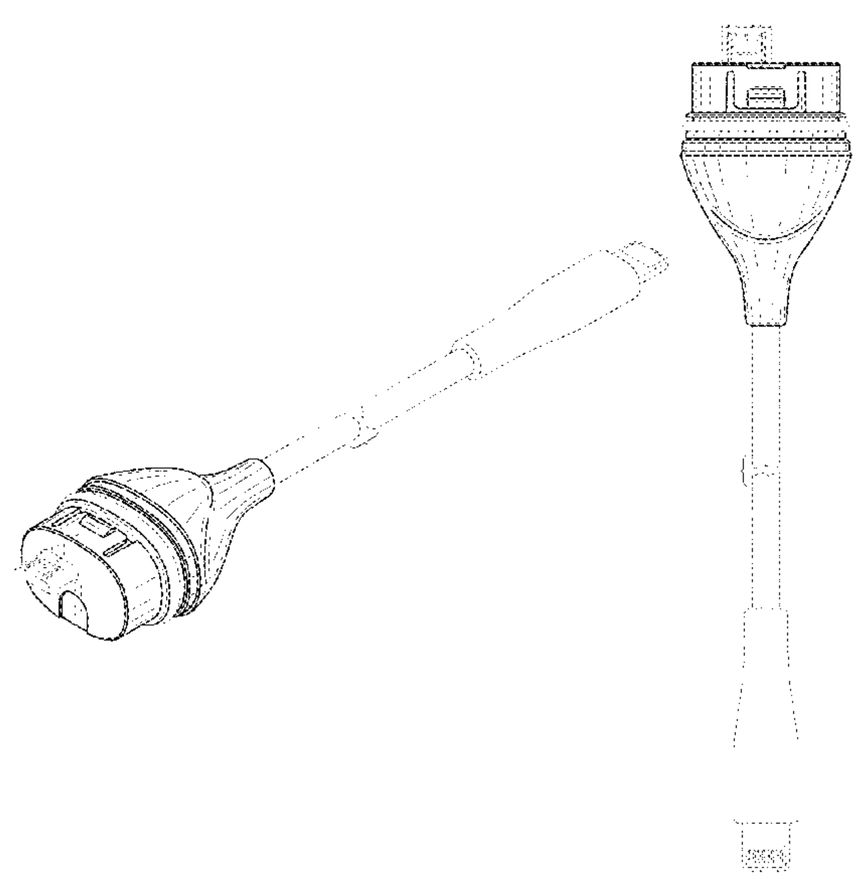

(56) **References Cited**

U.S. PATENT DOCUMENTS

6,217,364	B1	*	4/2001	Miskin	H01R 13/6275 439/358
6,257,914	B1	*	7/2001	Comerci	H01R 13/6273 439/357
D513,409	S	*	1/2006	Suckle	D13/156
D545,433	S		6/2007	Messerly	
D589,458	S	*	3/2009	Keeven	D13/156
D639,434	S		6/2011	Wodecki et al.	
D681,824	S		5/2013	Shinohara	
D703,332	S		4/2014	Saeki	
D703,821	S		4/2014	Moon	
D704,844	S		5/2014	Saeki	
D745,175	S		12/2015	Kitayama	
D749,224	S		2/2016	Iritani	
D760,167	S	*	6/2016	Kusano	D13/138.1
D791,330	S	*	7/2017	Moon	D24/187
D793,344	S	*	8/2017	Wang	D13/153
D816,850	S		5/2018	Asai	
D886,063	S	*	6/2020	Cyzen	D13/138.1
D887,850	S		6/2020	Elgena	
D896,973	S		9/2020	Wight et al.	
D910,857	S		2/2021	Shibayama et al.	
D912,675	S	*	3/2021	Kim	D14/433
D916,295	S		4/2021	Shibayama et al.	
D934,808	S	*	11/2021	Cyzen	D13/138.1
2018/0028159	A1		2/2018	Hageman et al.	

FOREIGN PATENT DOCUMENTS

JP	D1515349	S	1/2015
KR	30-0726182	S	1/2014
KR	30-0751362	S	7/2014
KR	300992876.0000	S	2/2019
KR	300992877.0000	S	2/2019

OTHER PUBLICATIONS

[No Author Listed] Esaote SP2430 For Sale. Providian Medical. https://www.providianmedical.com/ultrasound-probes/esaote/esaote-sp2430. U.S. Appl. No. 29/740,028 in office action dated Jul. 27, 2021. Published date unknown, downloaded on Jul. 22, 2021. 1 page.

[No Author Listed] HDI 5000 Transducer Listing. Publicly known prior to Oct. 27, 2017. 6 pages.

[No Author Listed] Samsung L38n Linear Probe. Ultrasound Supply. https://www.ultrasoundsupply.com/products/ultrasound-probes/samsung-probes/138n-linear-probe/. U.S. Appl. No. 29/739,956 in office action dated Jul. 27, 2021. Published date unknown, downloaded on Jul. 21, 2021. 1 page.

* cited by examiner

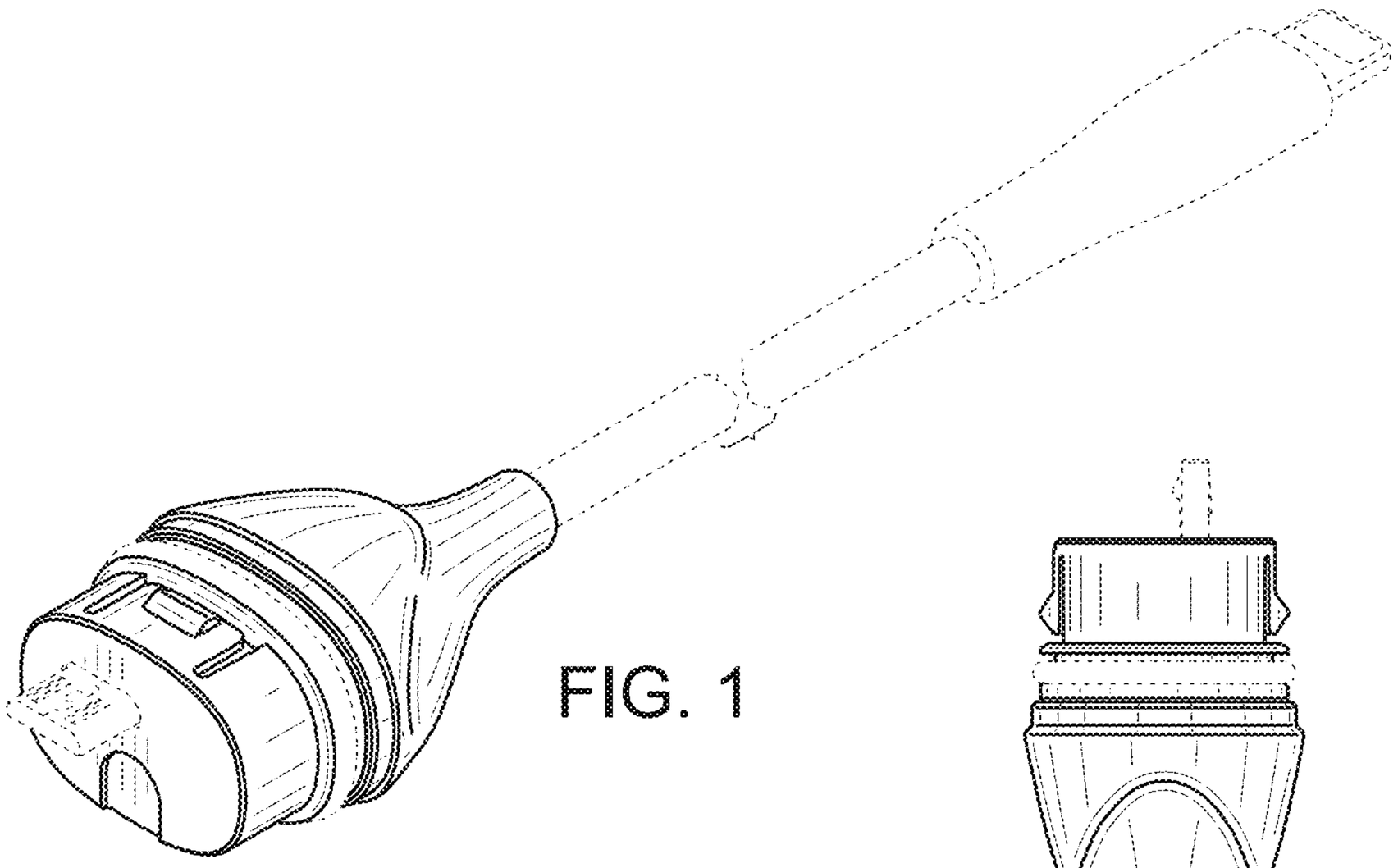

FIG. 1

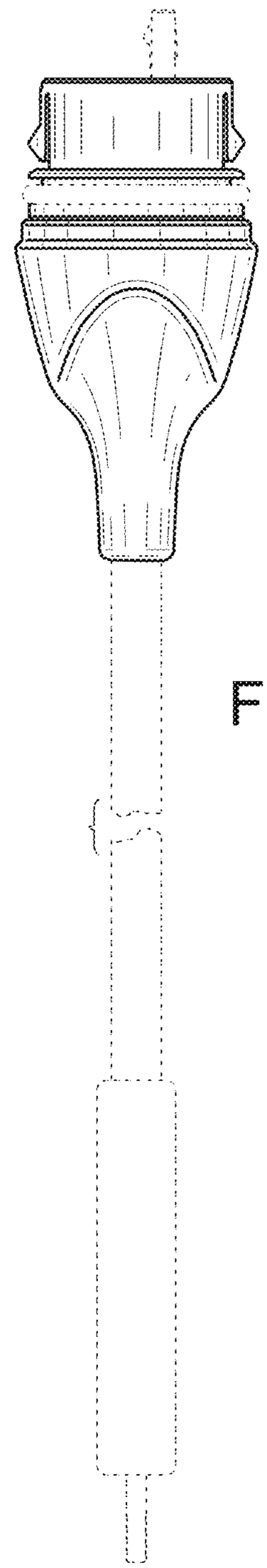

FIG. 2

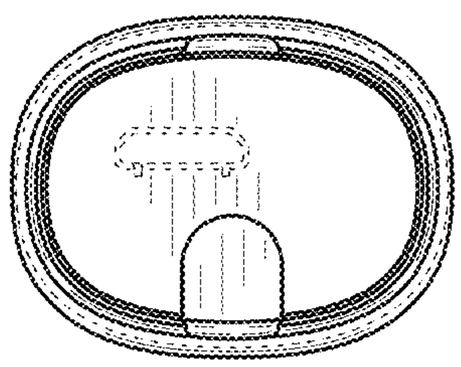

FIG. 3

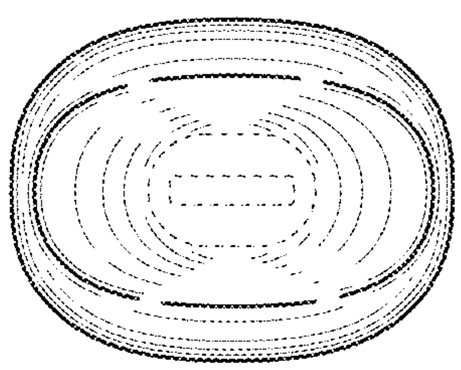

FIG. 4

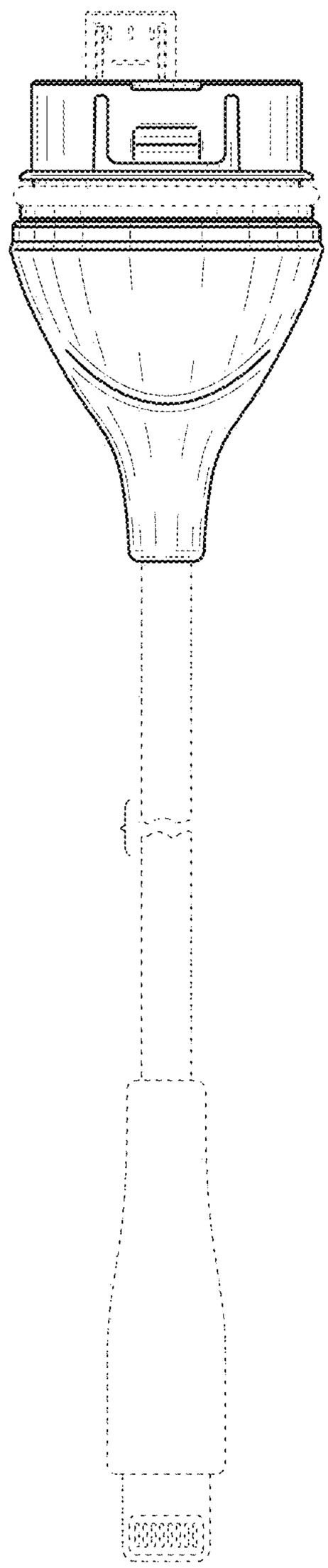

FIG. 5

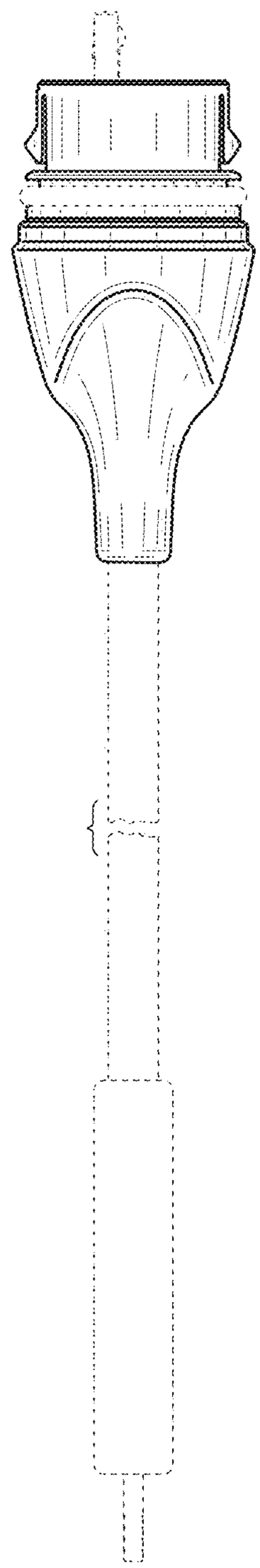

FIG. 6

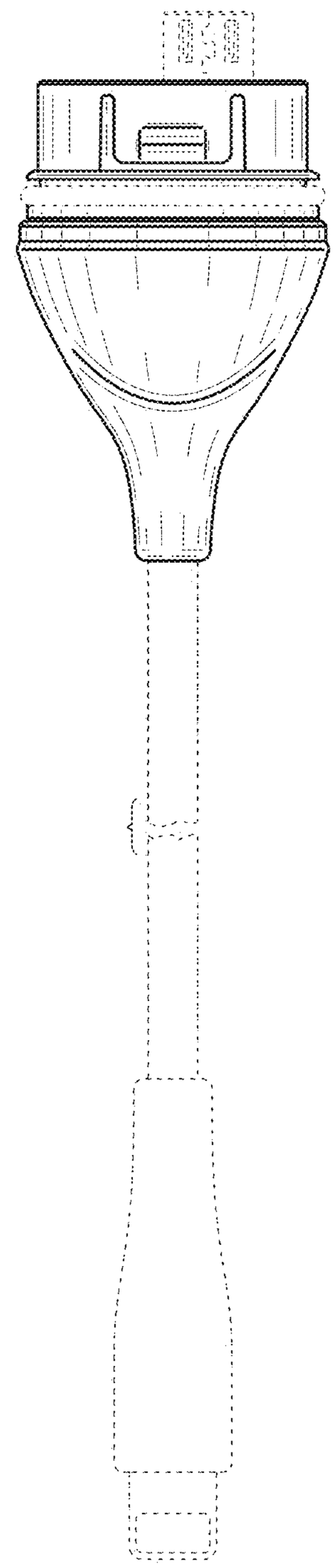

FIG. 7