US00D954655S

(12) United States Design Patent

Platt et al.

(10) Patent No.: US D954,655 S
(45) Date of Patent: ** Jun. 14, 2022

(54) **JOINER FOR CONDUIT FOR ROUTING CABLE**

(71) Applicant: **The Siemon Company**, Watertown, CT (US)

(72) Inventors: **Evan Platt**, Watertown, CT (US); **Jonathan Ciccio**, Watertown, CT (US); **Kevin J. Stronkowsky**, Middlebury, CT (US); **Scott Nagel**, Trumbull, CT (US)

(73) Assignee: **THE SIEMON COMPANY**, Watertown, CT (US)

(**) Term: **15 Years**

(21) Appl. No.: **29/719,307**

(22) Filed: **Jan. 2, 2020**

(51) **LOC (13) Cl.** **13-03**

(52) **U.S. Cl.**
USPC **D13/155**

(58) **Field of Classification Search**
USPC D13/110, 133, 149, 154, 155, 156, 157; D14/433; D8/356

(Continued)

(56) **References Cited**

U.S. PATENT DOCUMENTS

4,954,015 A * 9/1990 McGowan E04D 13/068 52/11
D431,533 S * 10/2000 Berkowitz D13/199
(Continued)

OTHER PUBLICATIONS

Siemon.com. Lightways Fiber Routing System. Date published: Apr. 2021. Date accessed: Jan. 2022. https://web.archive.org/web/*/https://www.siemon.com/en/home/systems/fiber-routing (Year: 2021).*

Primary Examiner — Jennifer O King

(74) *Attorney, Agent, or Firm* — Cantor Colburn LLP

(57) **CLAIM**

The ornamental design for the joiner for conduit for routing cable, as shown.

DESCRIPTION

FIG. **1** is a top, isometric view of a joiner for conduit for routing cable showing a first embodiment of our new design;
FIG. **2** is a bottom, isometric view of a joiner for conduit for routing cable showing a first embodiment of our new design;
FIG. **3** is a front elevation view thereof;
FIG. **4** is a rear elevation view thereof;
FIG. **5** is a left side elevation view thereof;
FIG. **6** is a right side elevation view thereof;
FIG. **7** is a top-down plan view thereof;
FIG. **8** is a bottom-up plan view thereof;
FIG. **9** is a top, isometric view of a joiner for conduit for routing cable showing a second embodiment of our new design;
FIG. **10** is a bottom, isometric view of a joiner for conduit for routing cable showing a second embodiment of our new design;
FIG. **11** is a front elevation view thereof;
FIG. **12** is a rear elevation view thereof;
FIG. **13** is a left side elevation view thereof;
FIG. **14** is a right side elevation view thereof;
FIG. **15** is a top-down plan view thereof;
FIG. **16** is a bottom-up plan view thereof;
FIG. **17** is a top, isometric view of a joiner for conduit for routing cable showing a third embodiment of our new design;
FIG. **18** is a bottom, isometric view of a joiner for conduit for routing cable showing a third embodiment of our new design;
FIG. **19** is a front elevation view thereof;
FIG. **20** is a rear elevation view thereof;
FIG. **21** is a left side elevation view thereof;
FIG. **22** is a right side elevation view thereof;
FIG. **23** is a top-down plan view thereof;
FIG. **24** is a bottom-up plan view thereof;
(Continued)

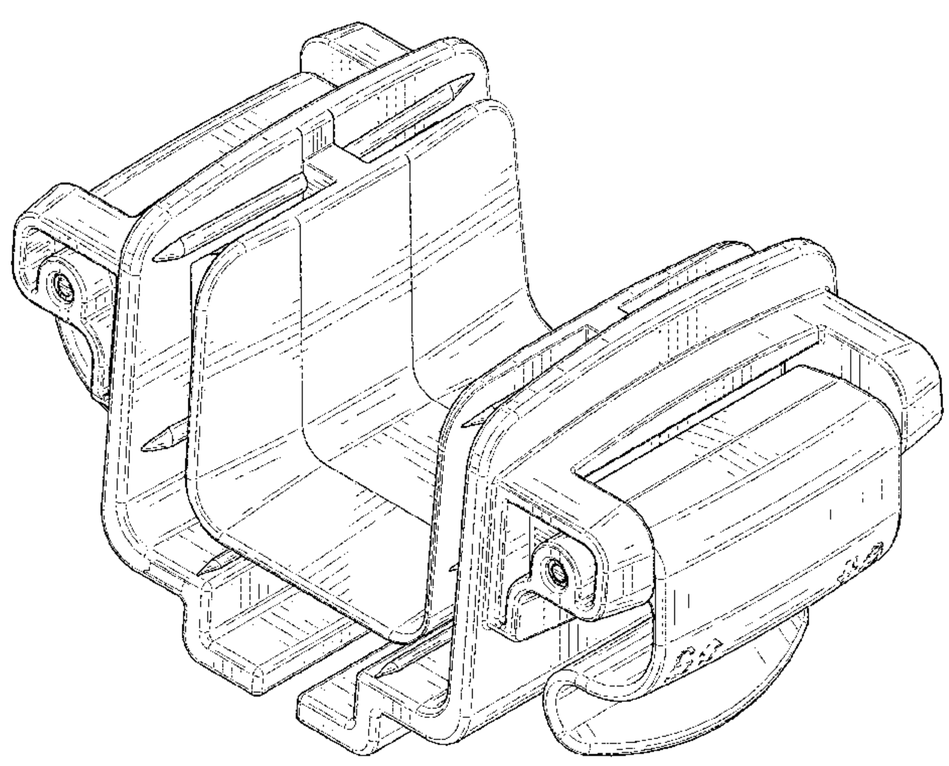

FIG. **25** is a top, isometric view of a joiner for conduit for routing cable showing a fourth embodiment of our new design;
FIG. **26** is a bottom, isometric view of a joiner for conduit for routing cable showing a fourth embodiment of our new design;
FIG. **27** is a front elevation view thereof;
FIG. **28** is a rear elevation view thereof;
FIG. **29** is a left side elevation view thereof;
FIG. **30** is a right side elevation view thereof;
FIG. **31** is a top-down plan view thereof; and,
FIG. **32** is a bottom-up plan view thereof.

1 Claim, 24 Drawing Sheets

(58) **Field of Classification Search**
CPC ... H01R 13/443; H01R 13/447; H02G 3/0608
See application file for complete search history.

(56) **References Cited**

U.S. PATENT DOCUMENTS

D450,564	S *	11/2001	Kane	D8/356	
6,424,779	B1 *	7/2002	Ellison	G02B 6/4459	385/134
6,450,458	B1 *	9/2002	Bernard	H02G 3/0608	403/387
6,512,875	B1 *	1/2003	Johnson	H02G 3/0608	248/228.4
6,715,719	B2 *	4/2004	Nault	G02B 6/4439	403/387
8,186,633	B2 *	5/2012	Ferris	H02G 3/0608	403/325
D760,171	S *	6/2016	Howard	D13/155	
D884,655	S *	5/2020	Maggard	D13/155	
D899,232	S *	10/2020	Banuls Tobaruela	D8/367	
D936,612	S *	11/2021	Endo	D13/156	

* cited by examiner

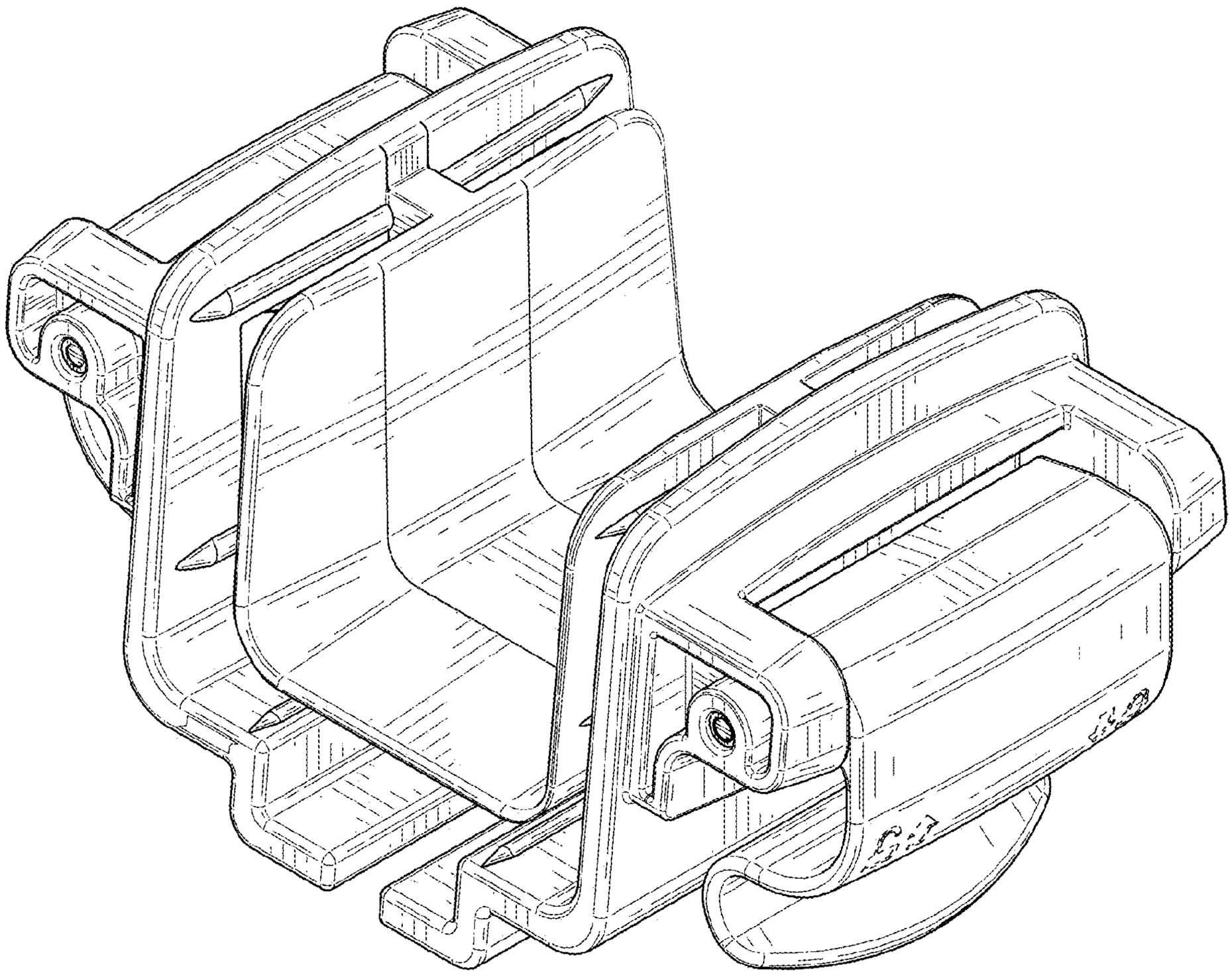

FIG. 1

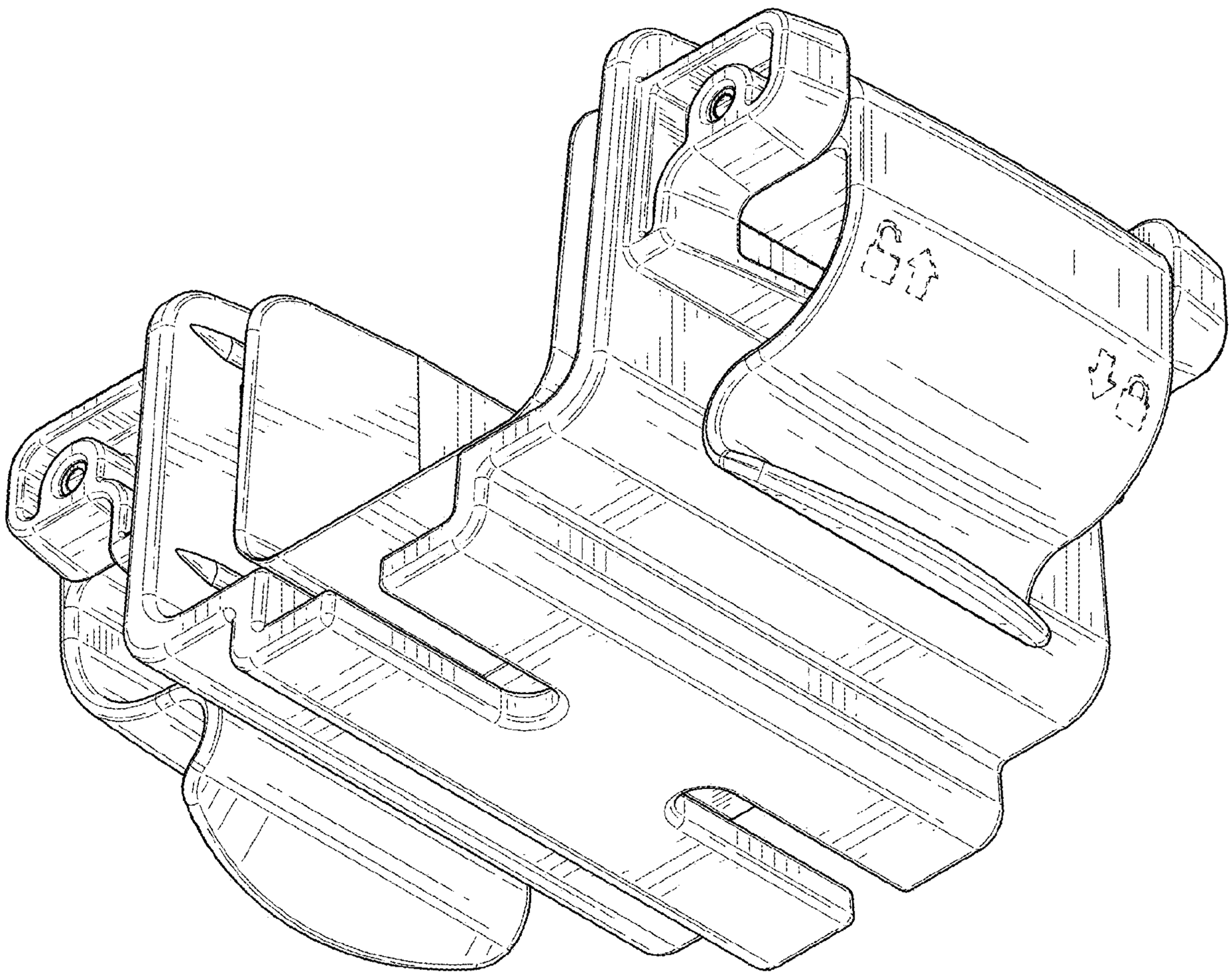

FIG. 2

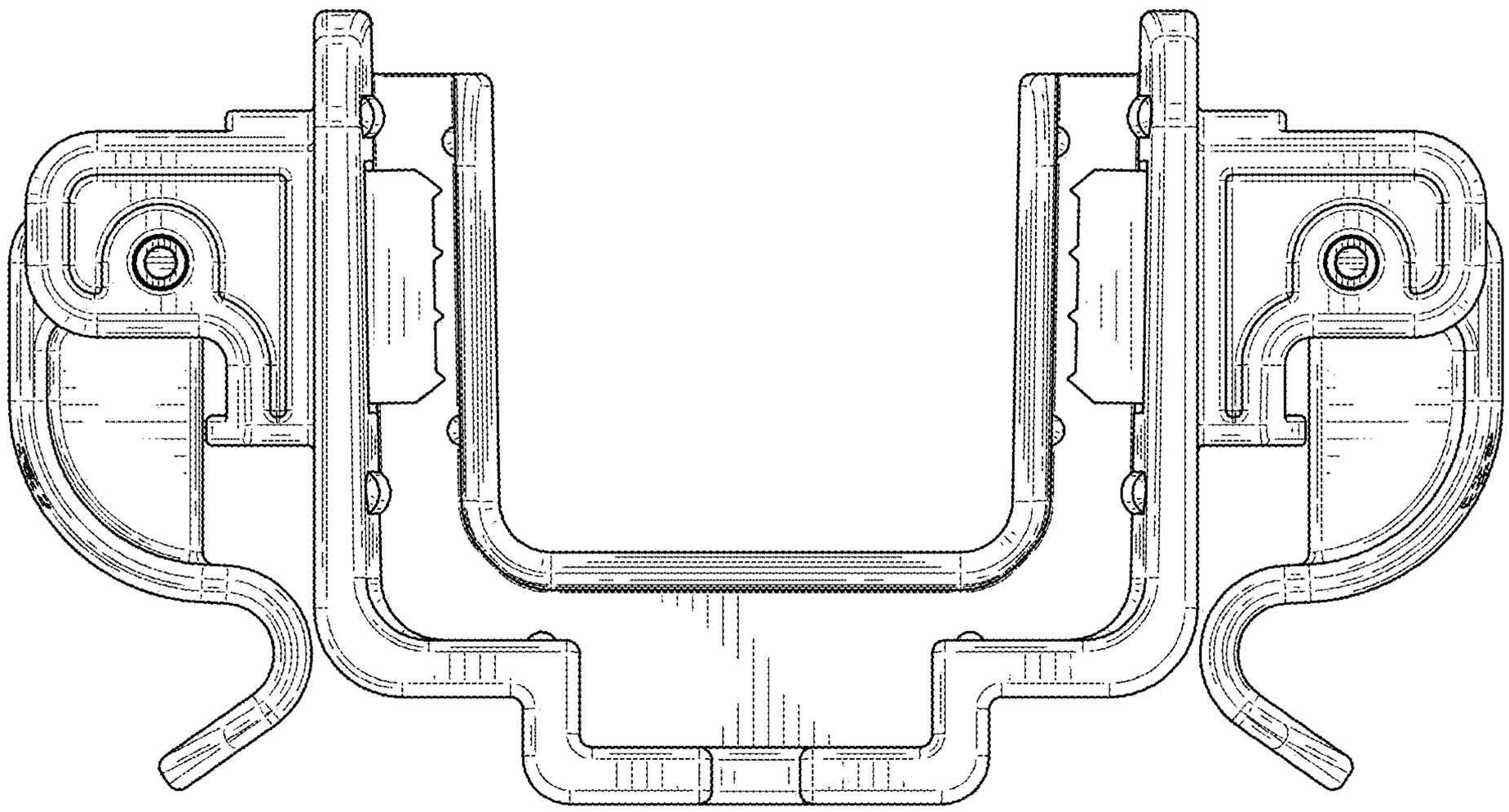

FIG. 3

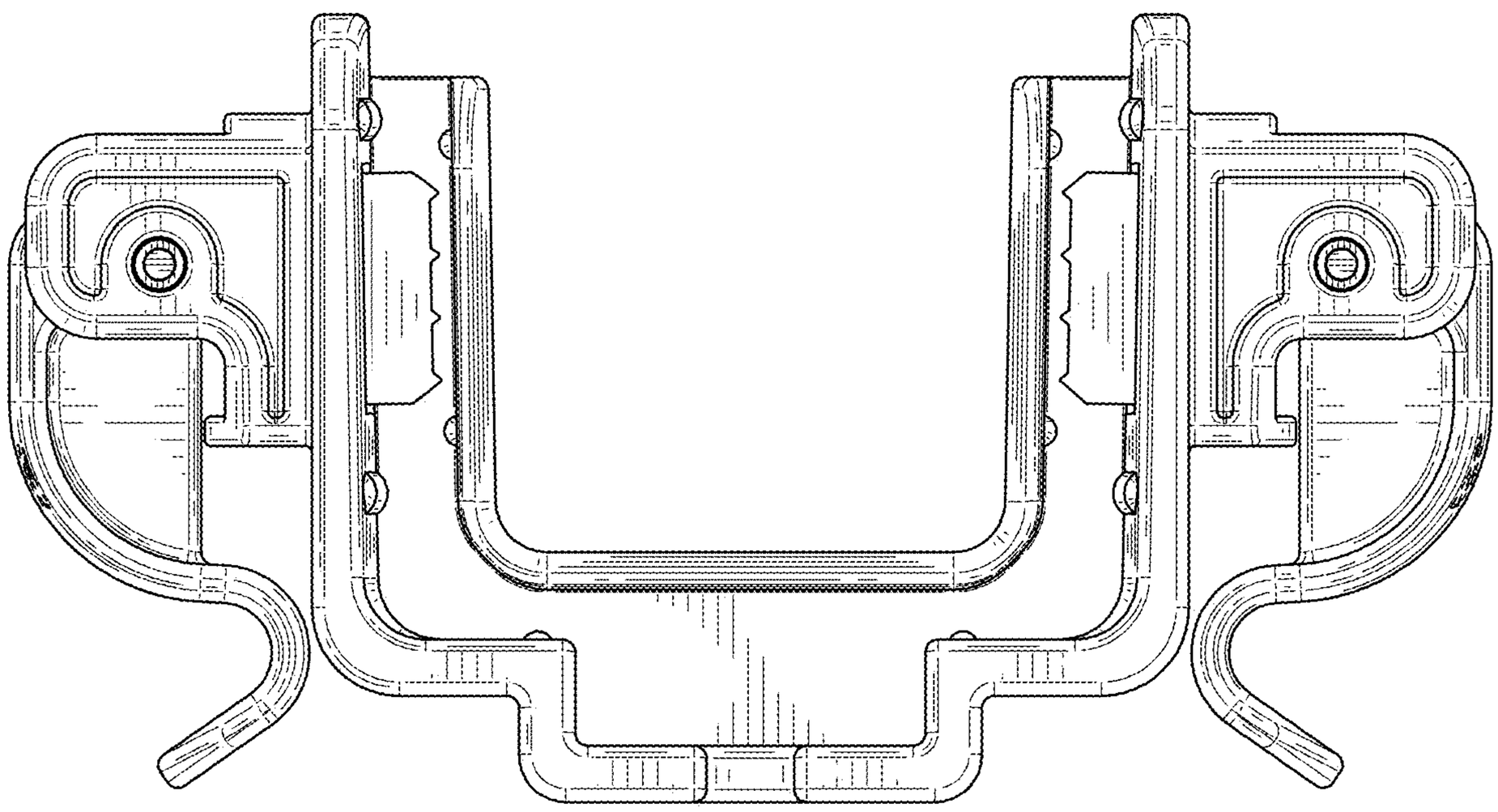

FIG. 4

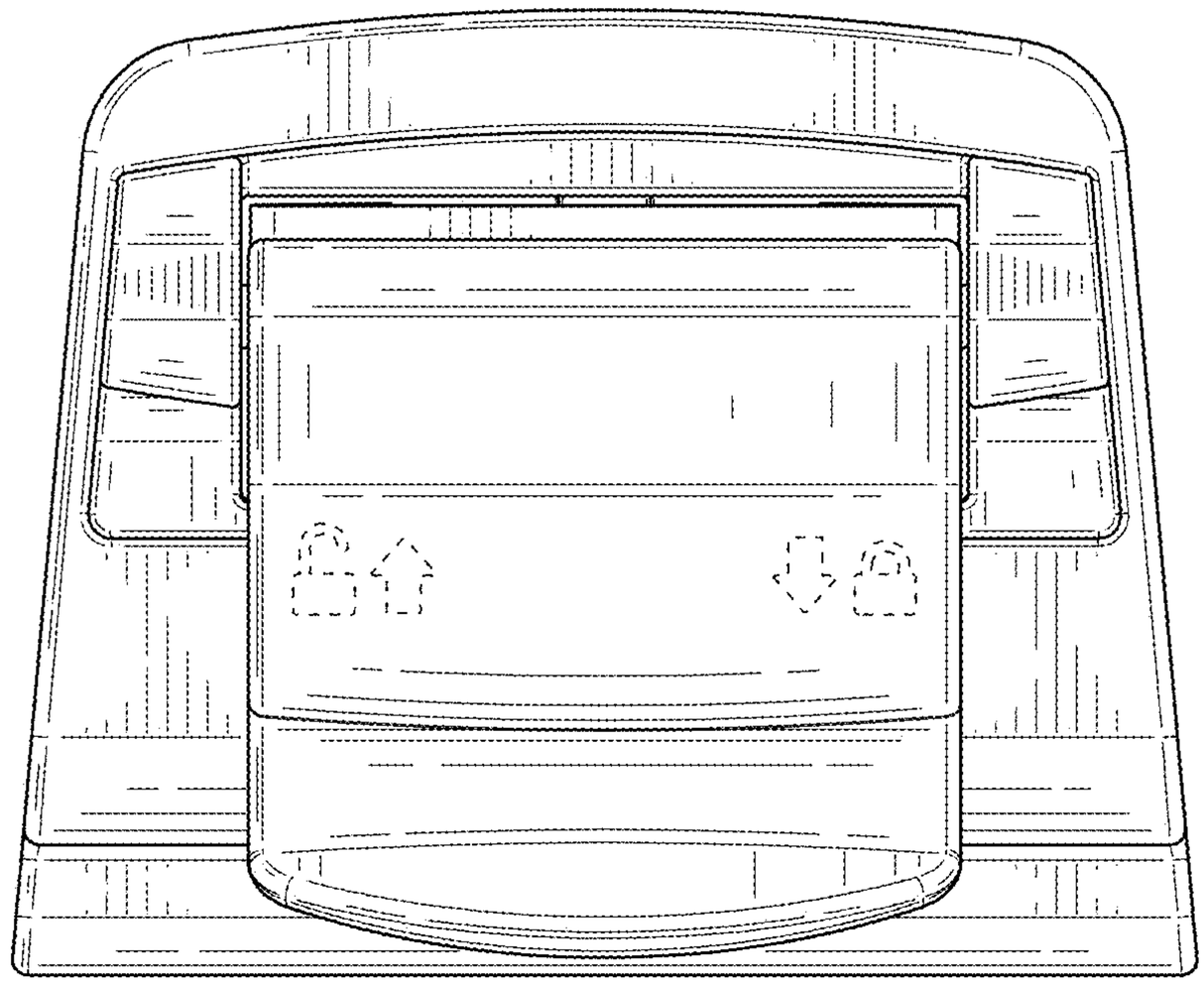

FIG. 5

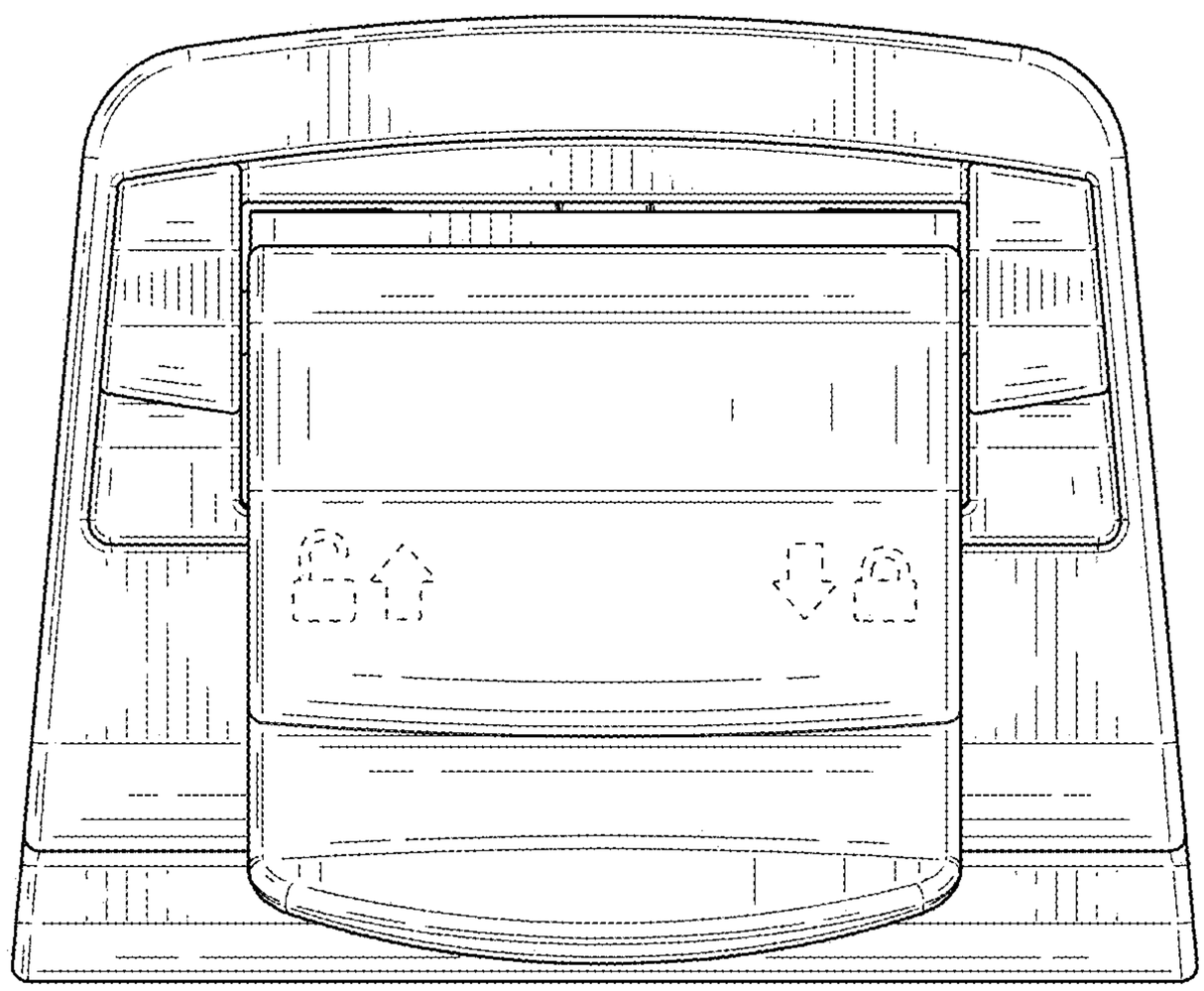

FIG. 6

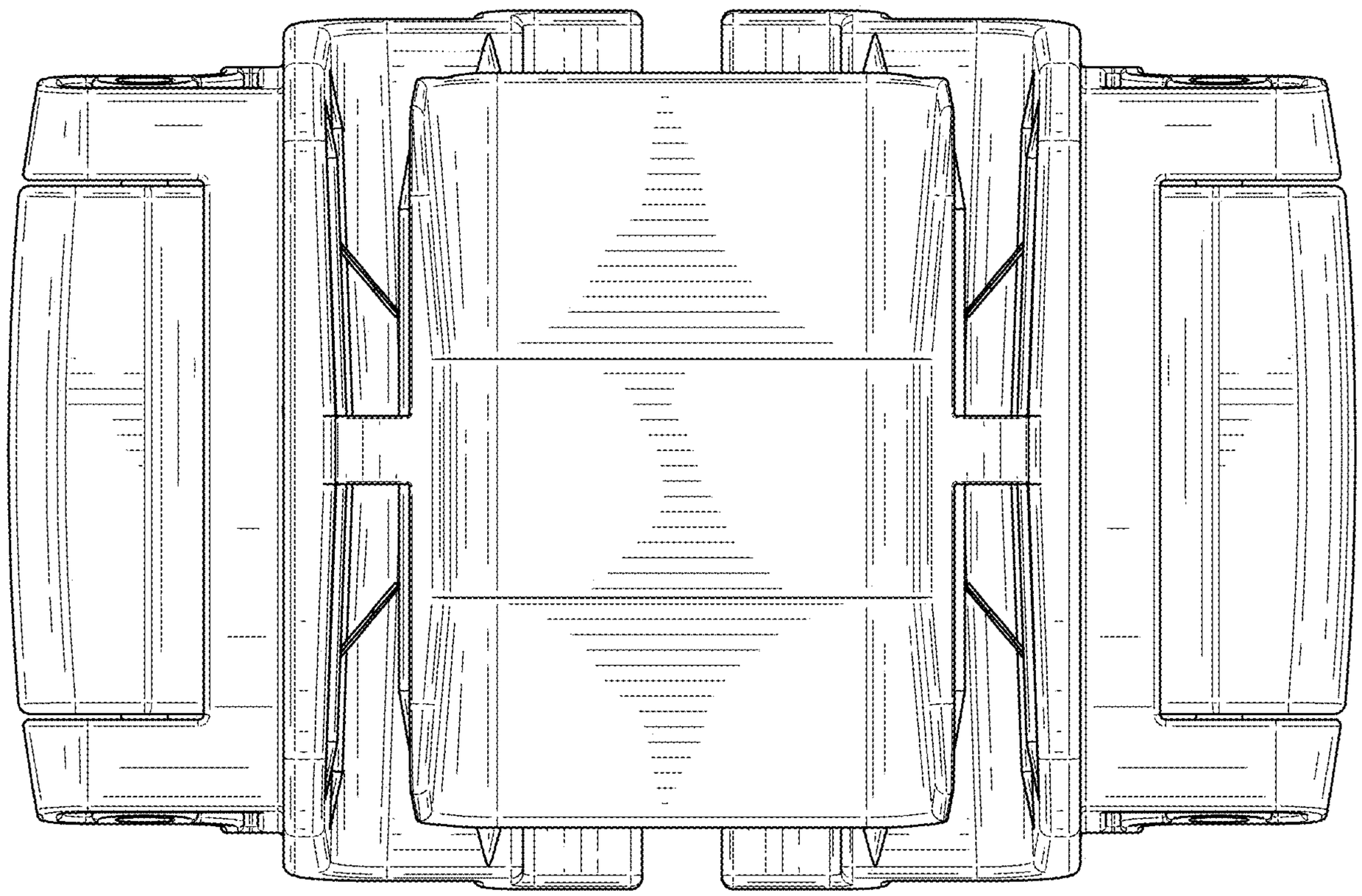

FIG. 7

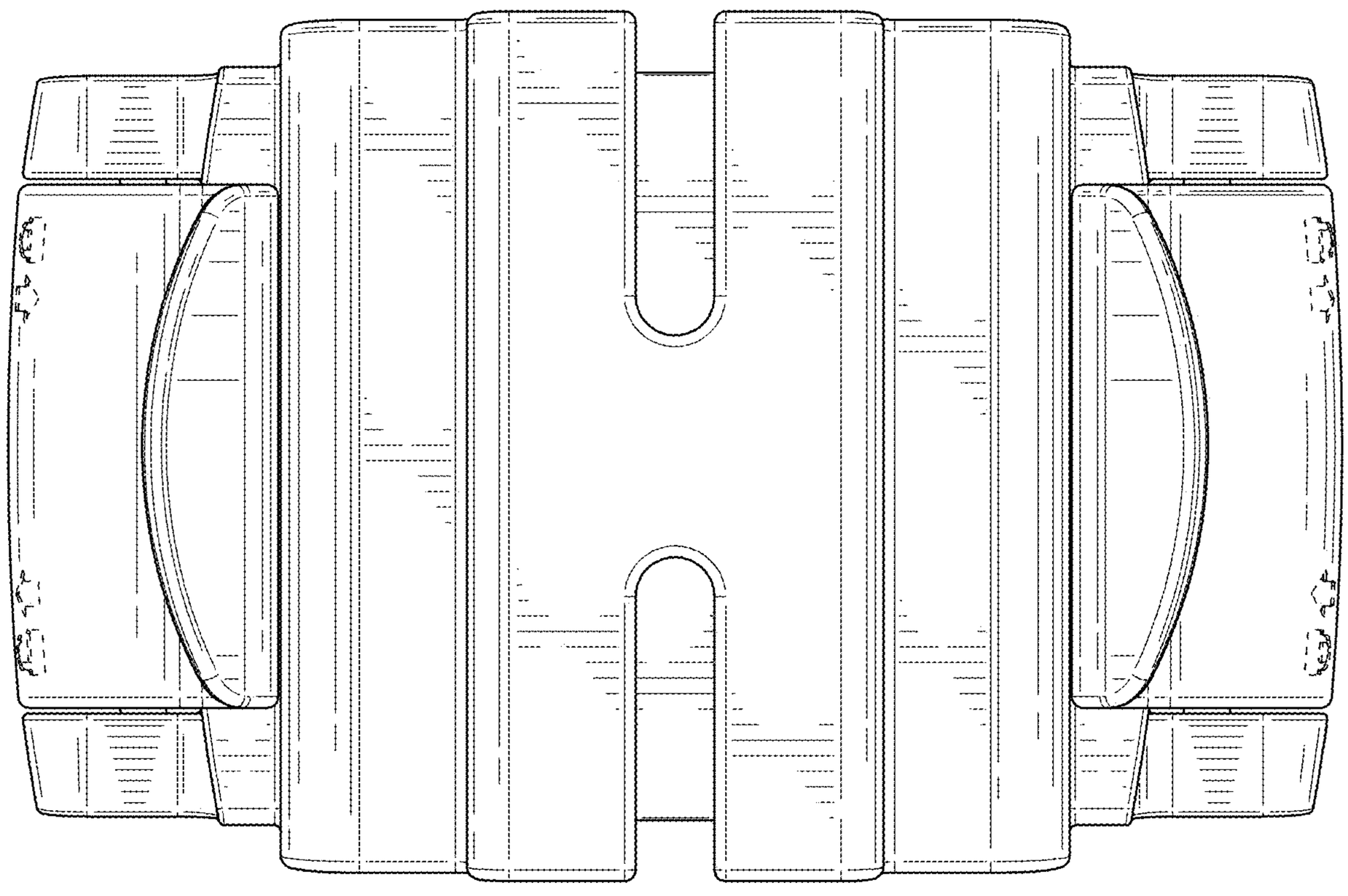

FIG. 8

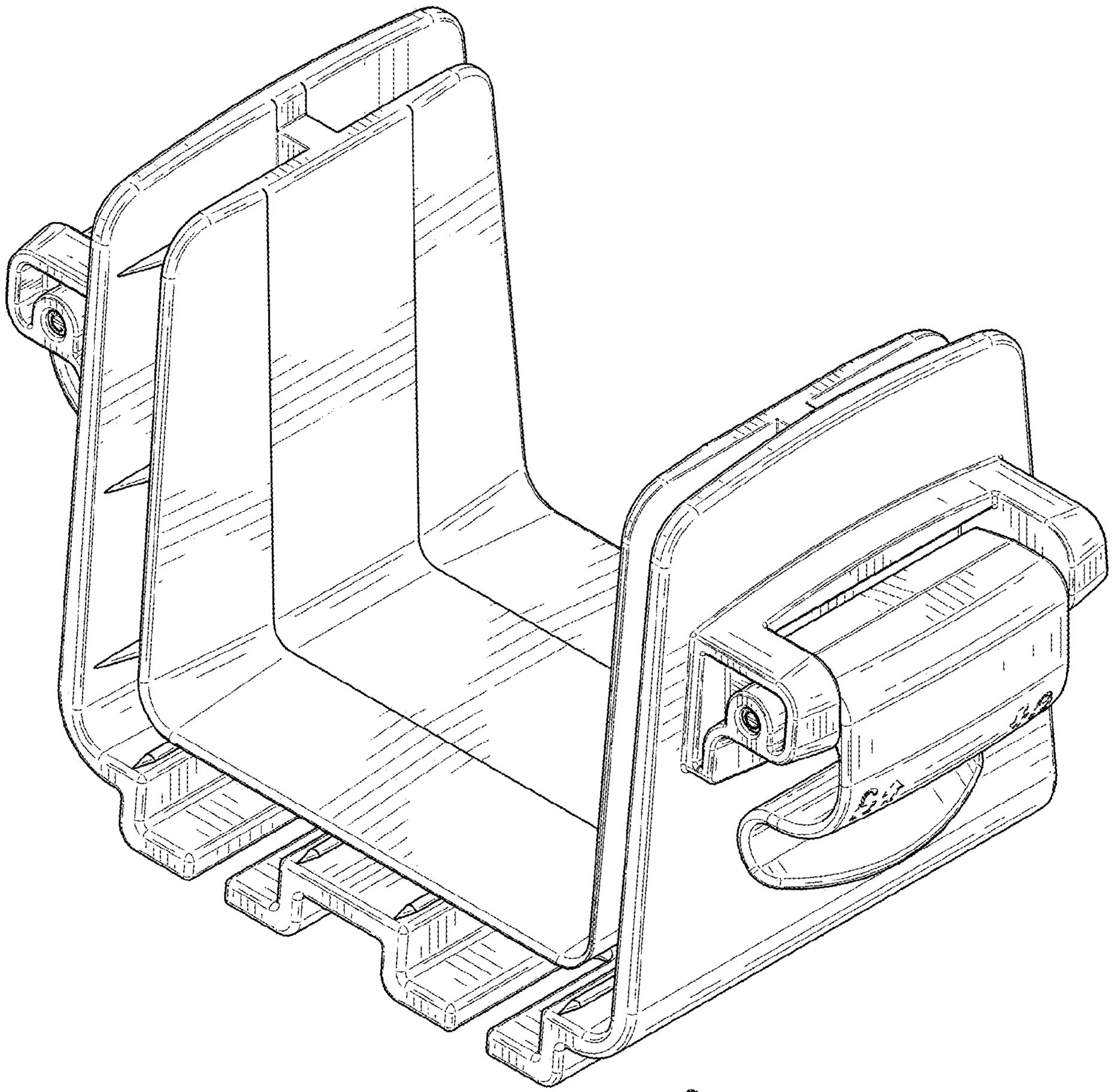

FIG. 9

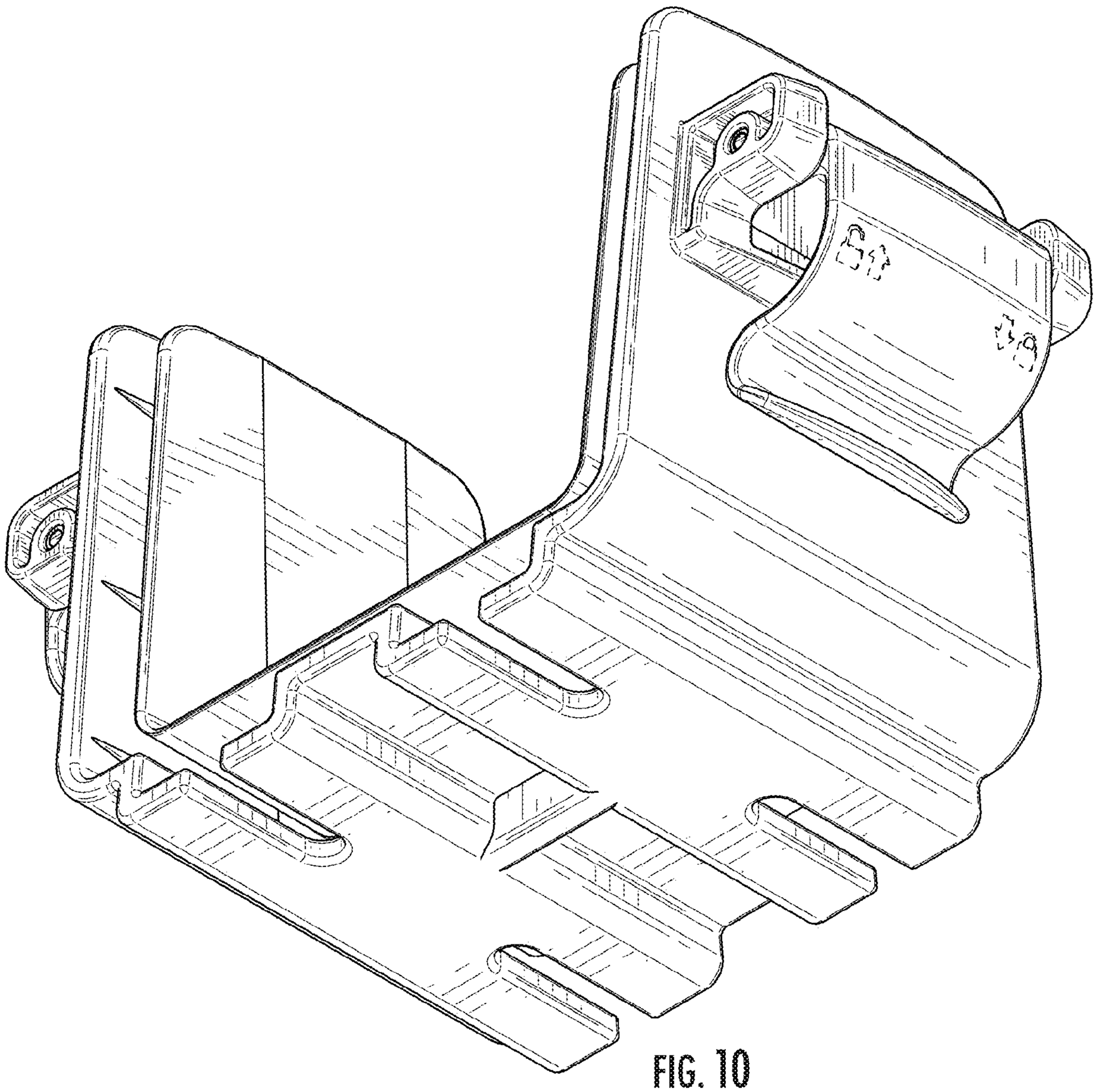

FIG. 10

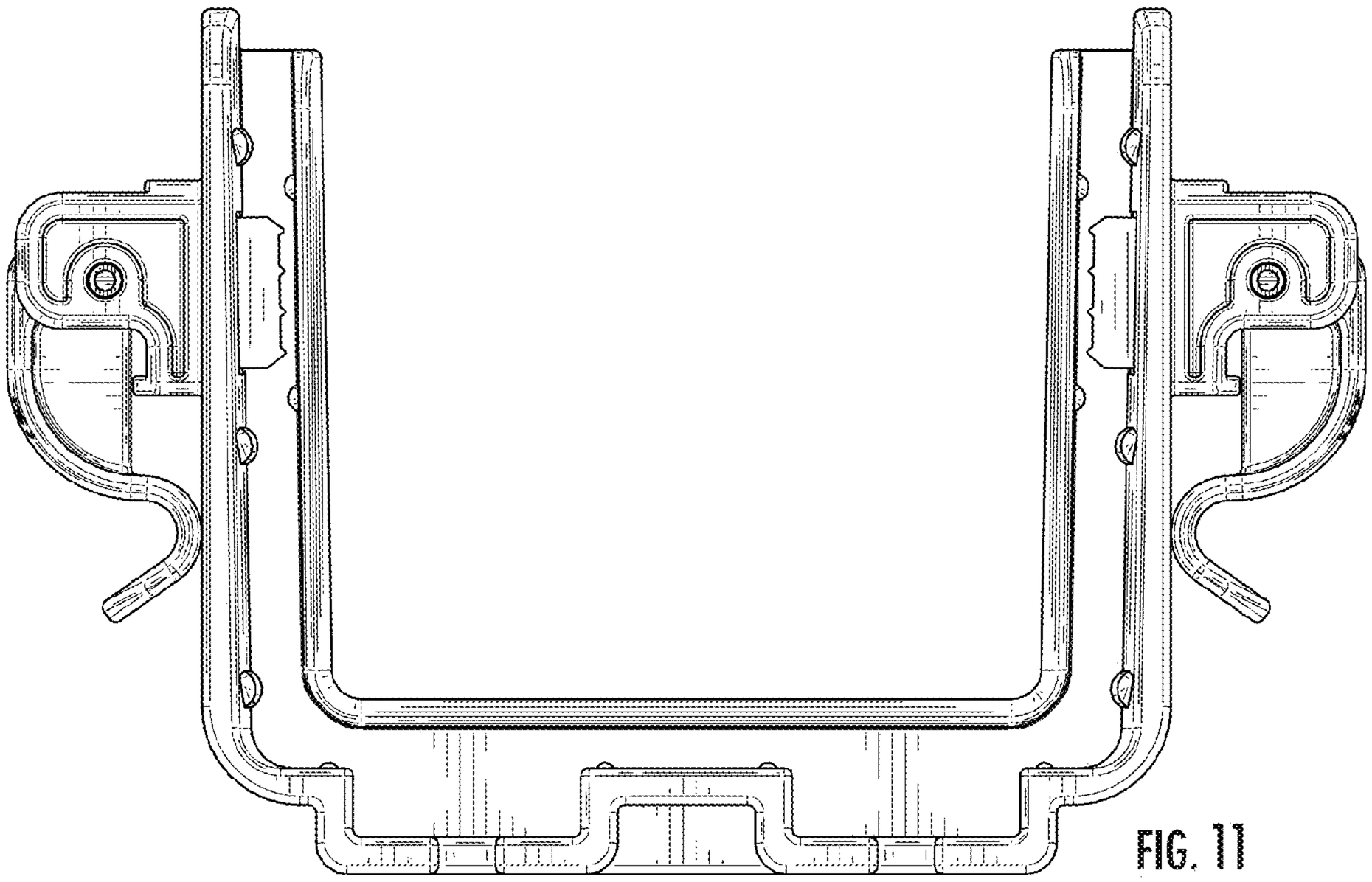

FIG. 11

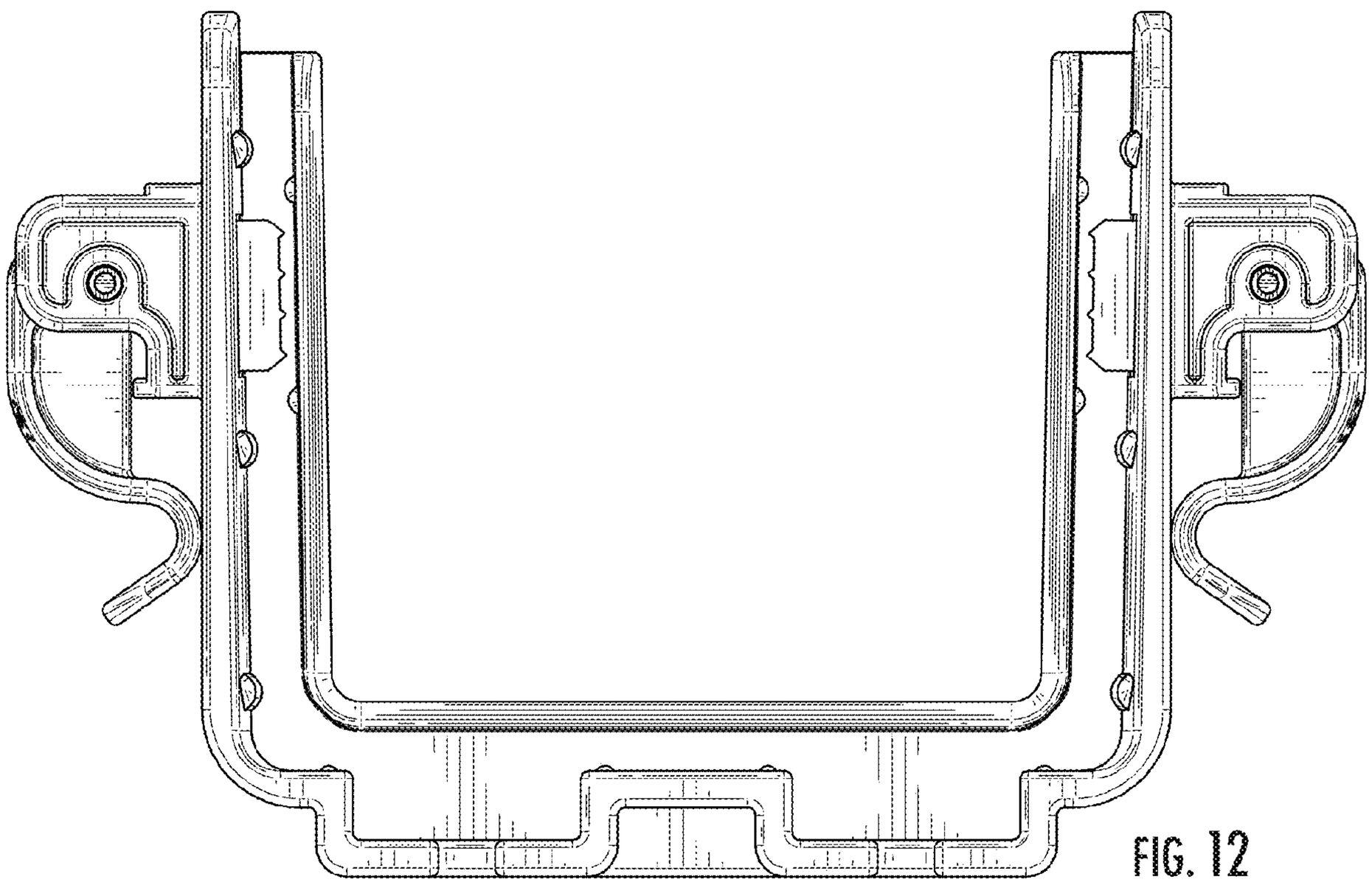

FIG. 12

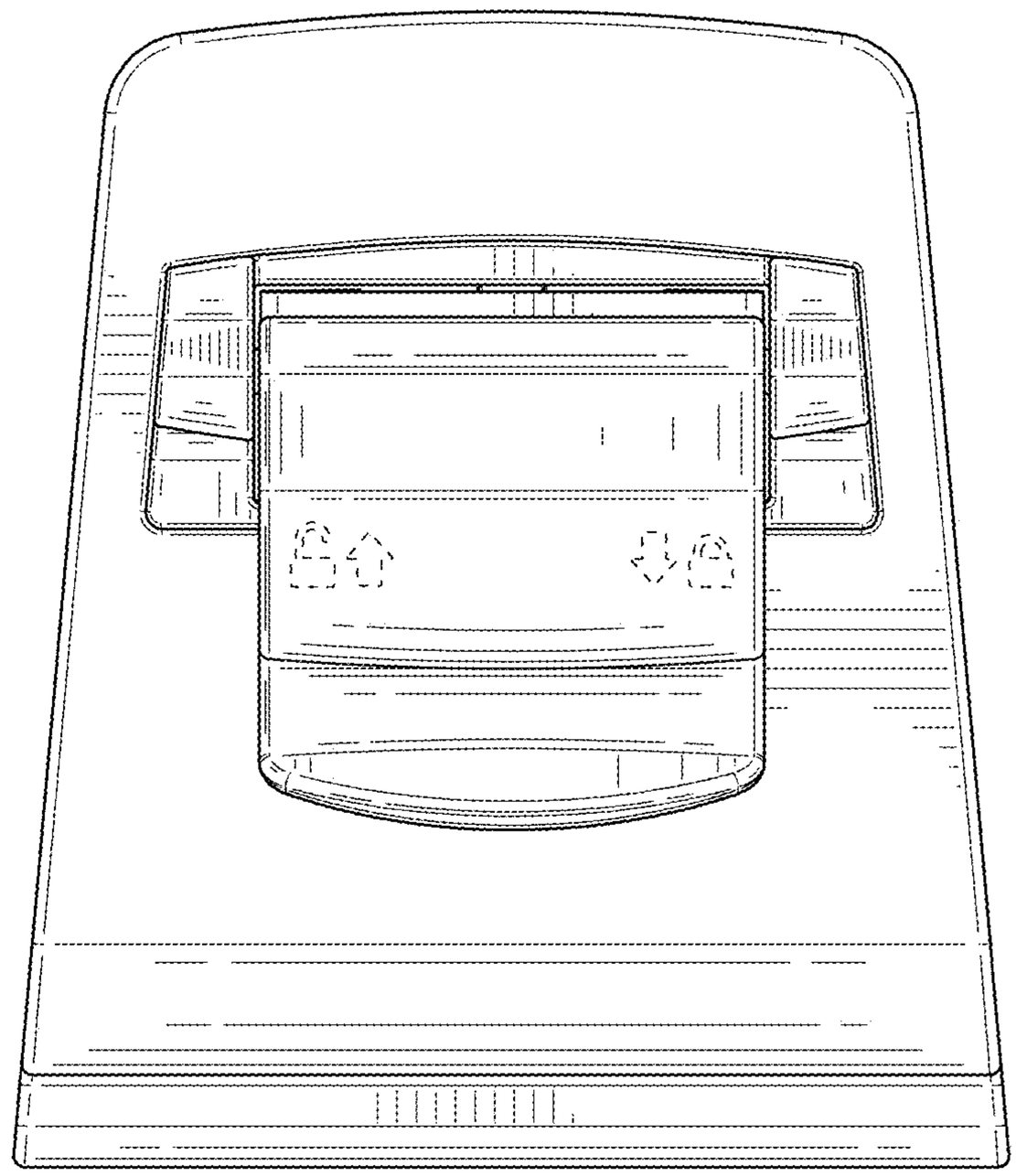

FIG. 13

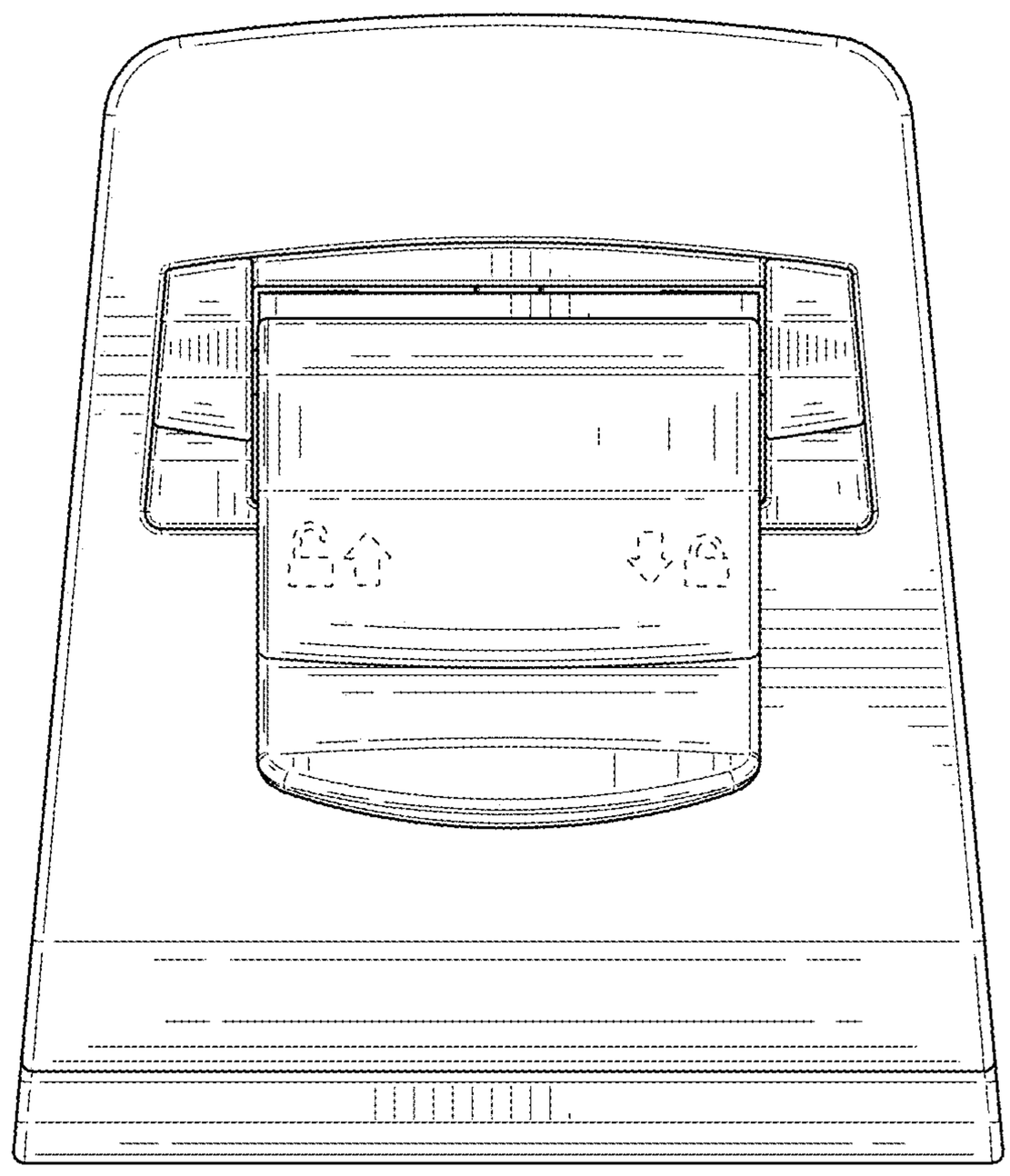

FIG. 14

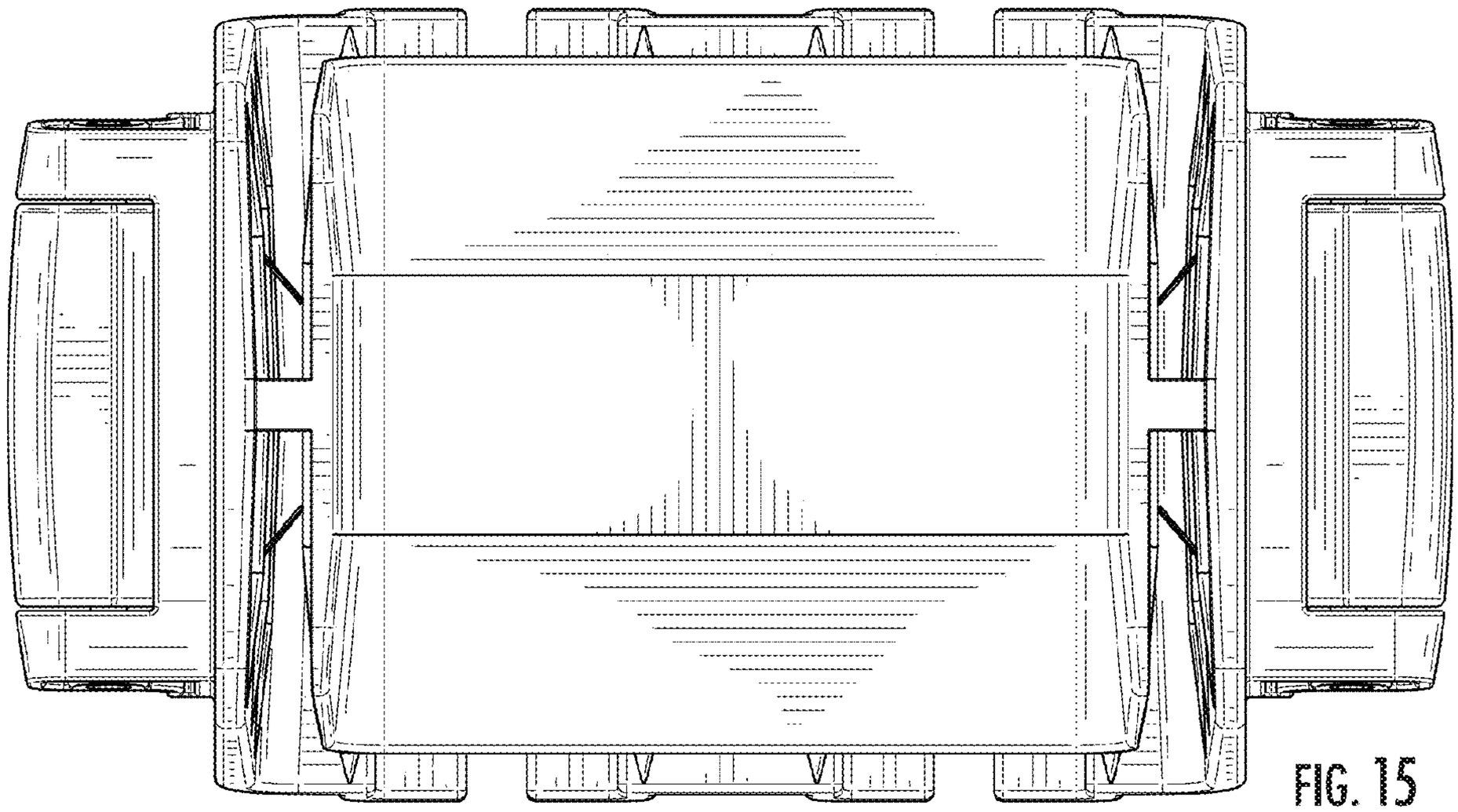

FIG. 15

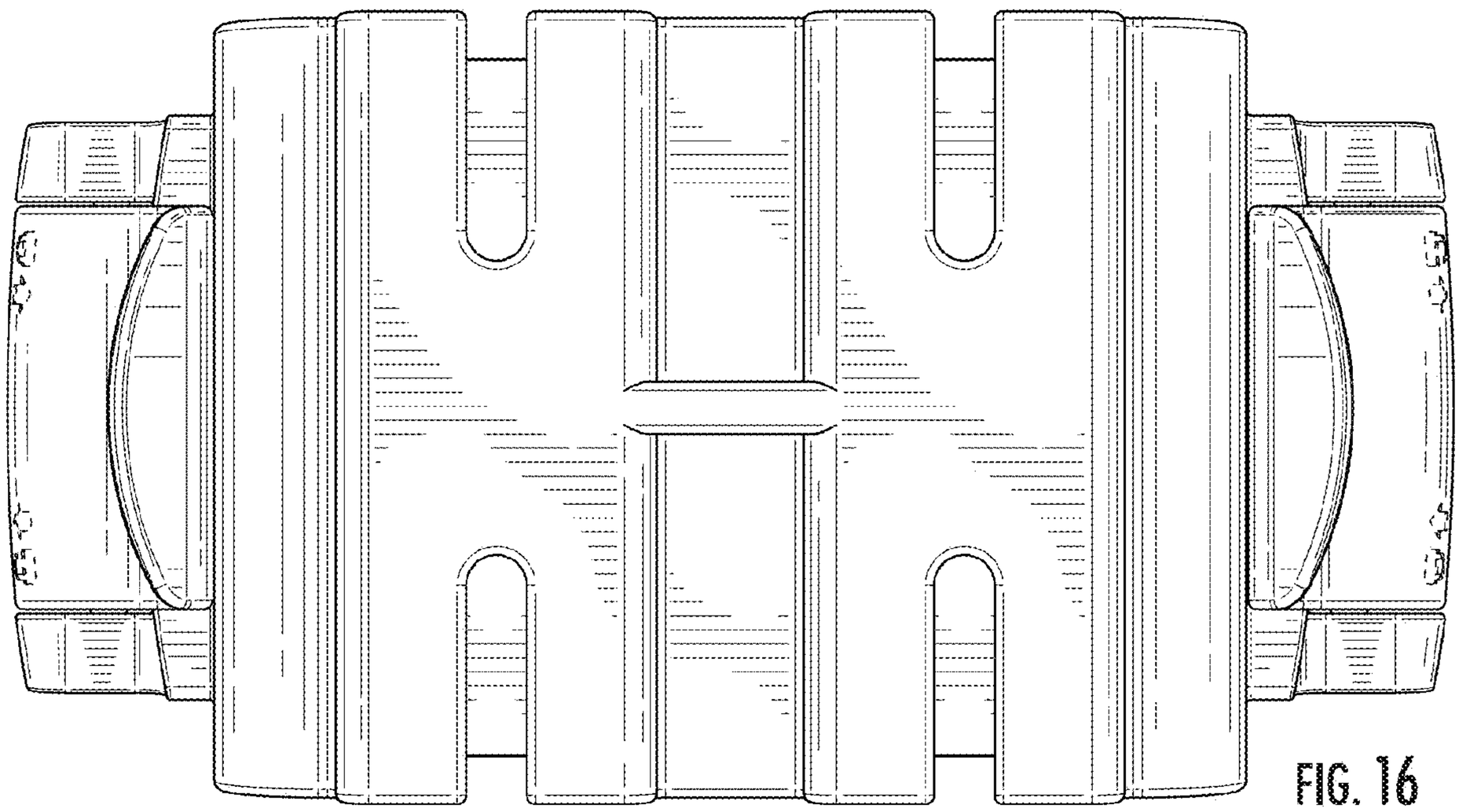

FIG. 16

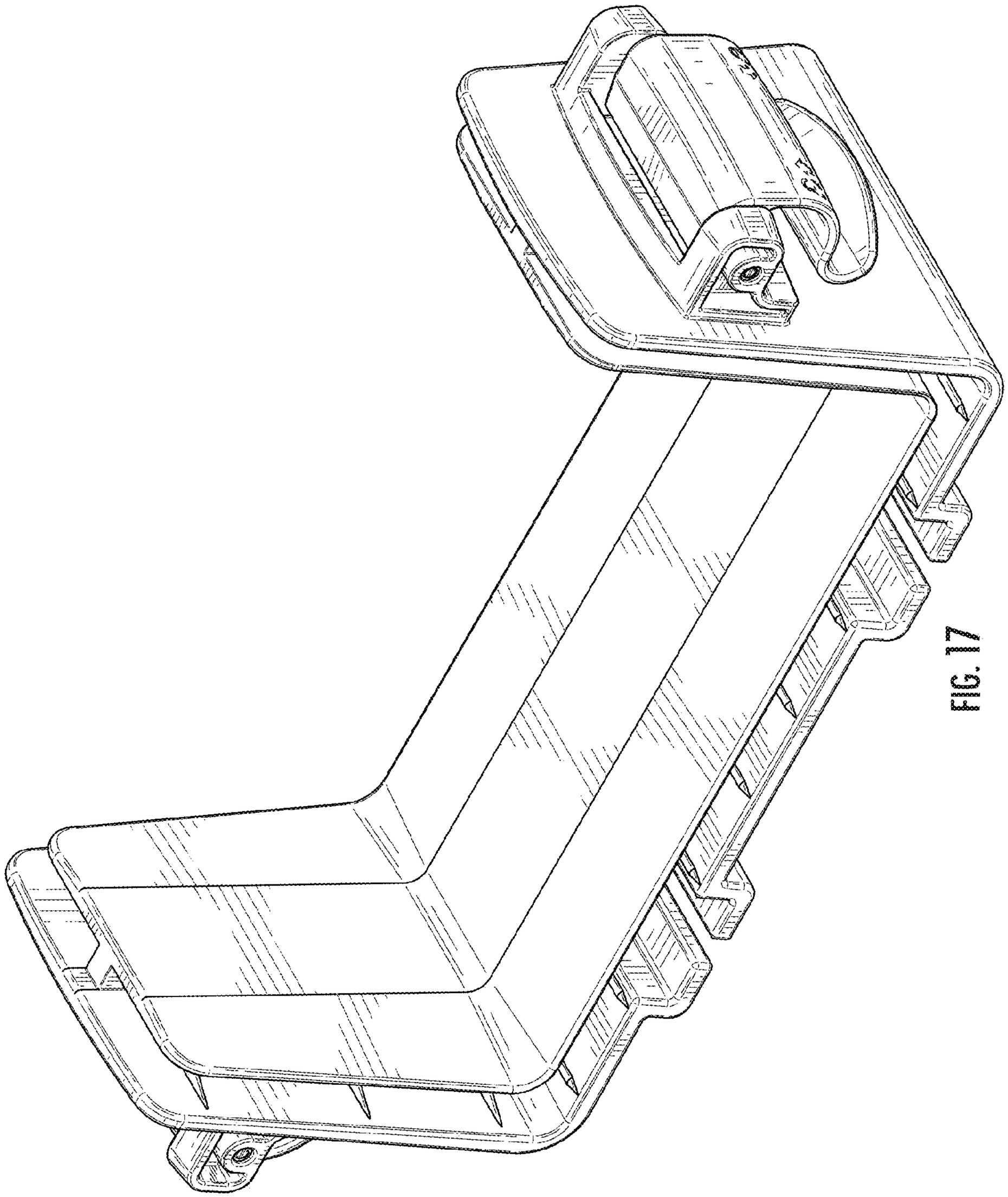

FIG. 17

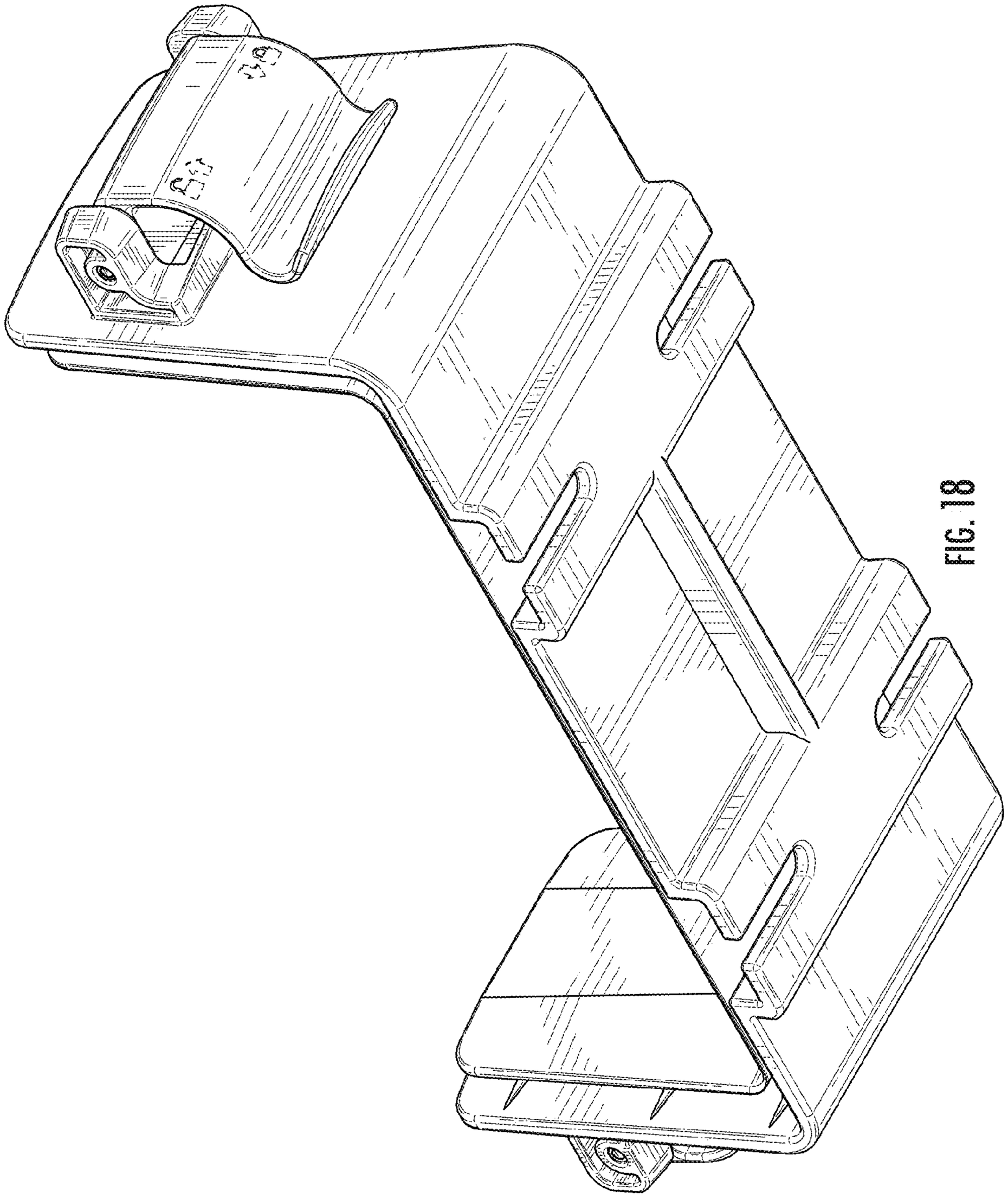

FIG. 18

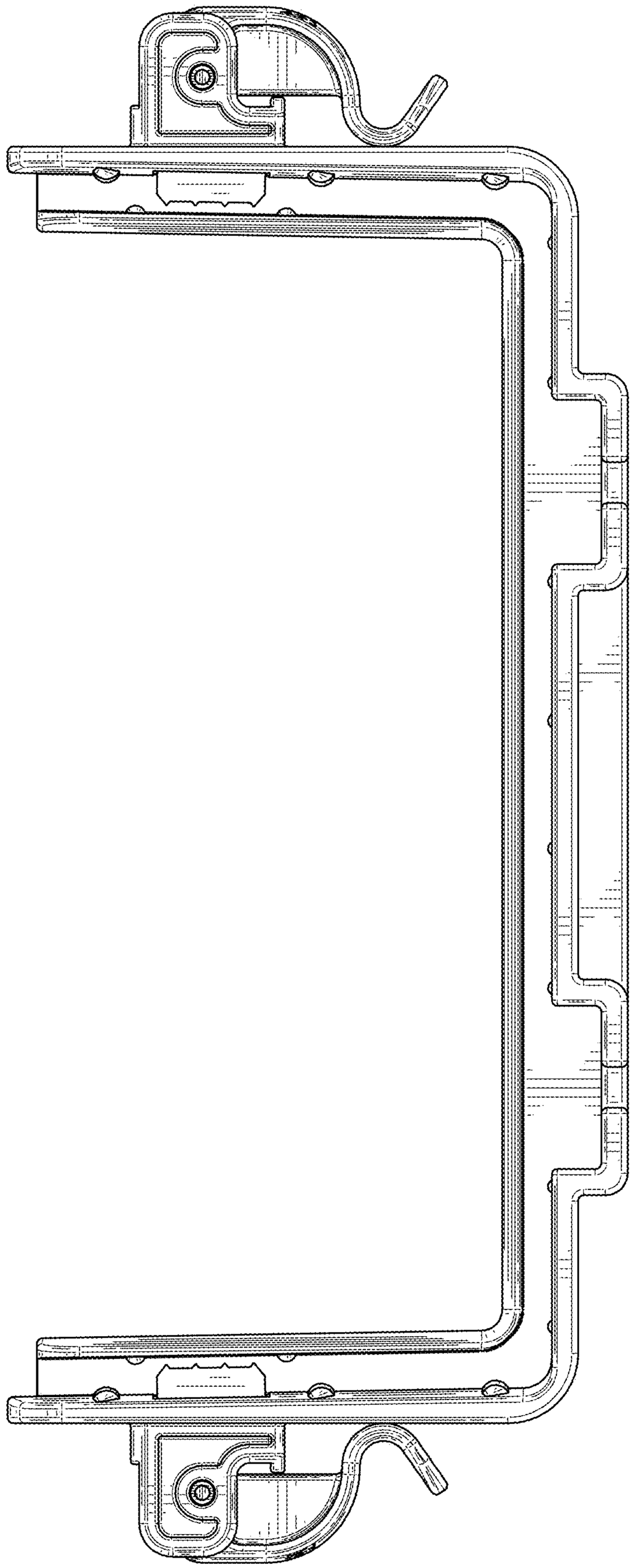

FIG. 19

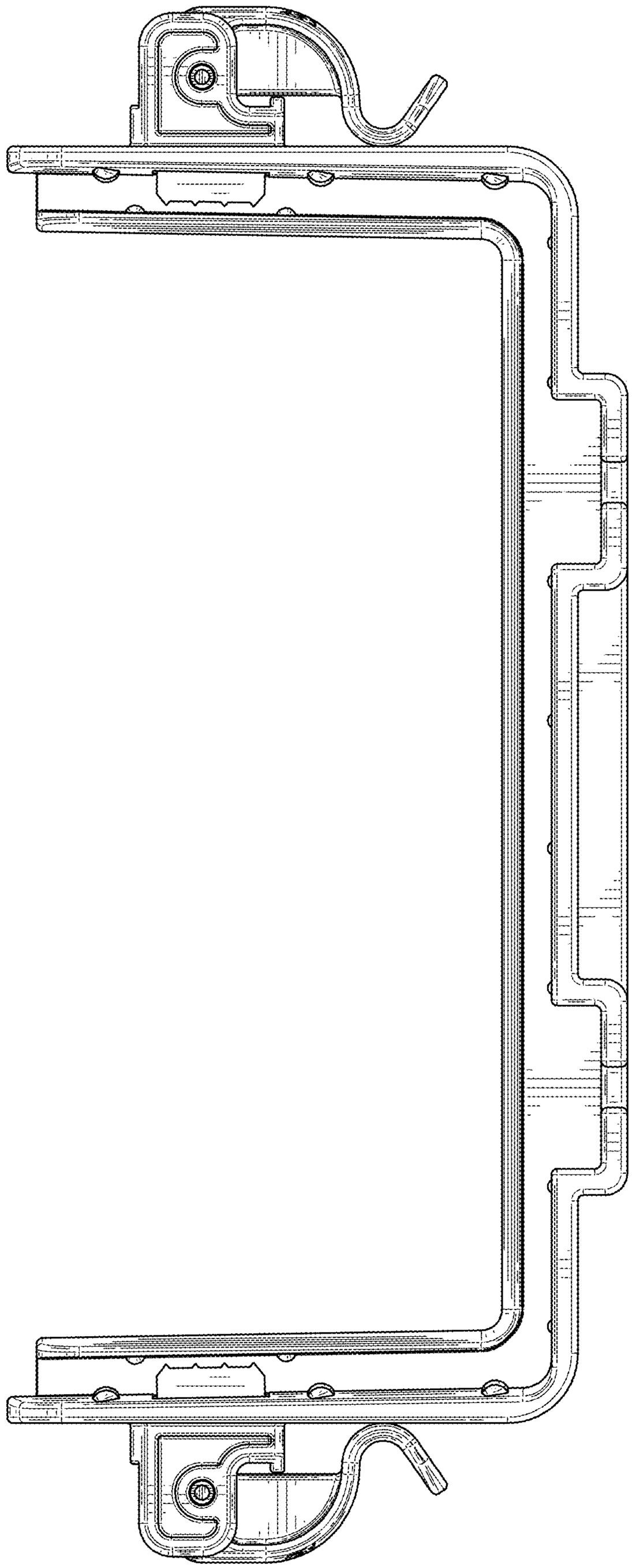

FIG. 20

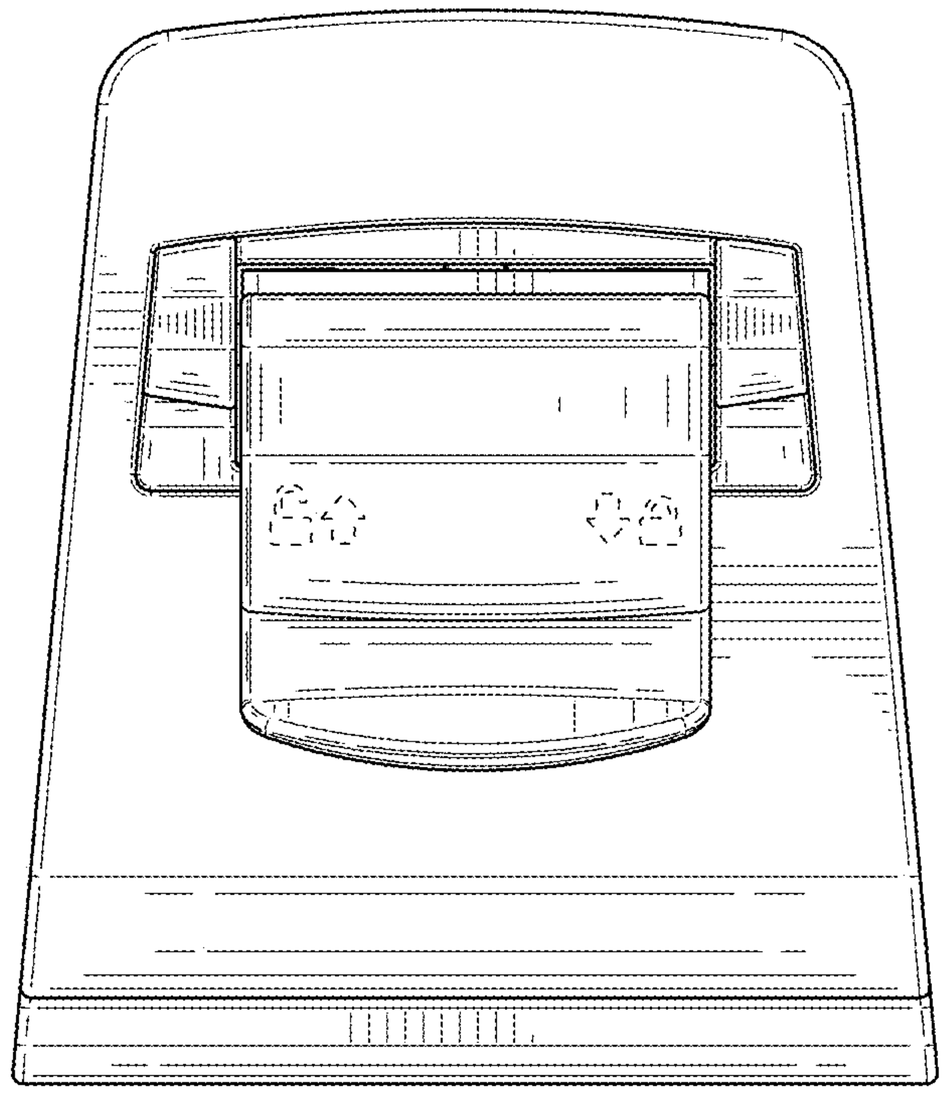

FIG. 21

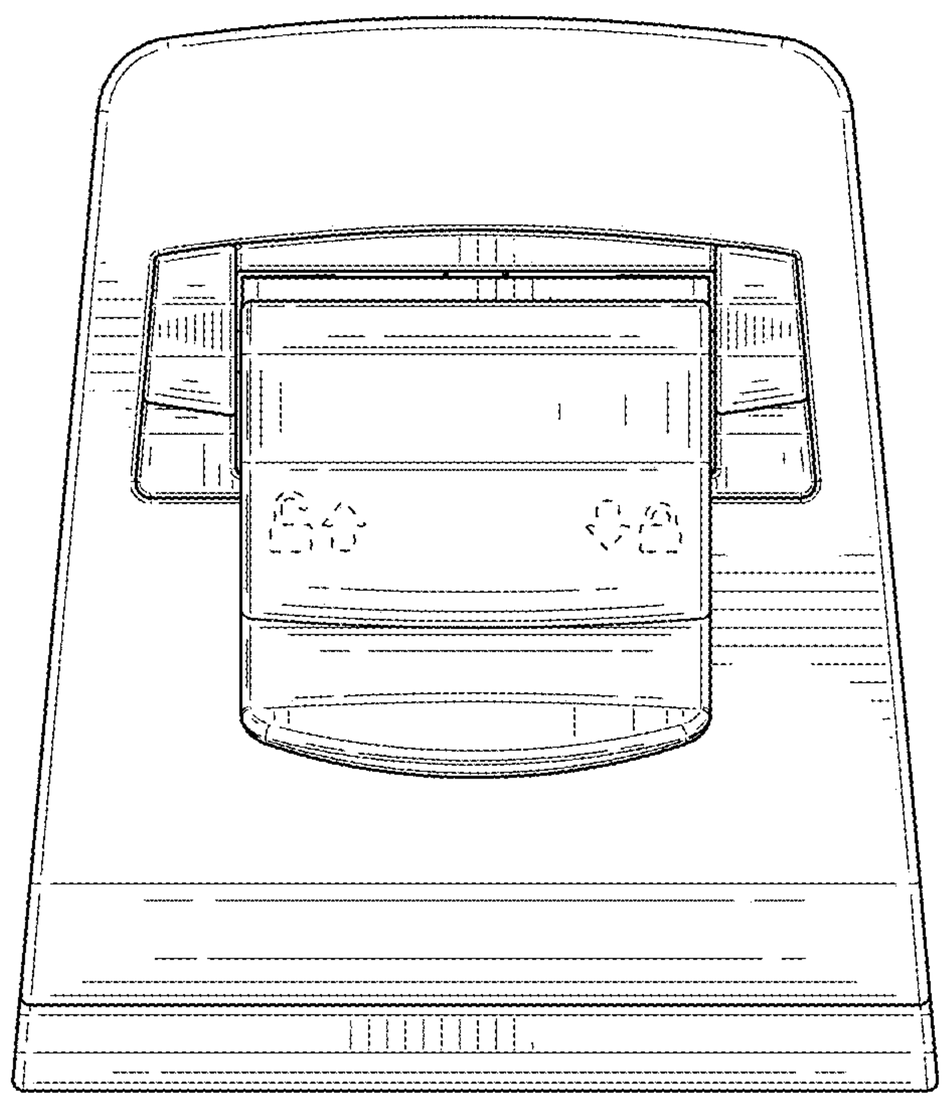

FIG. 22

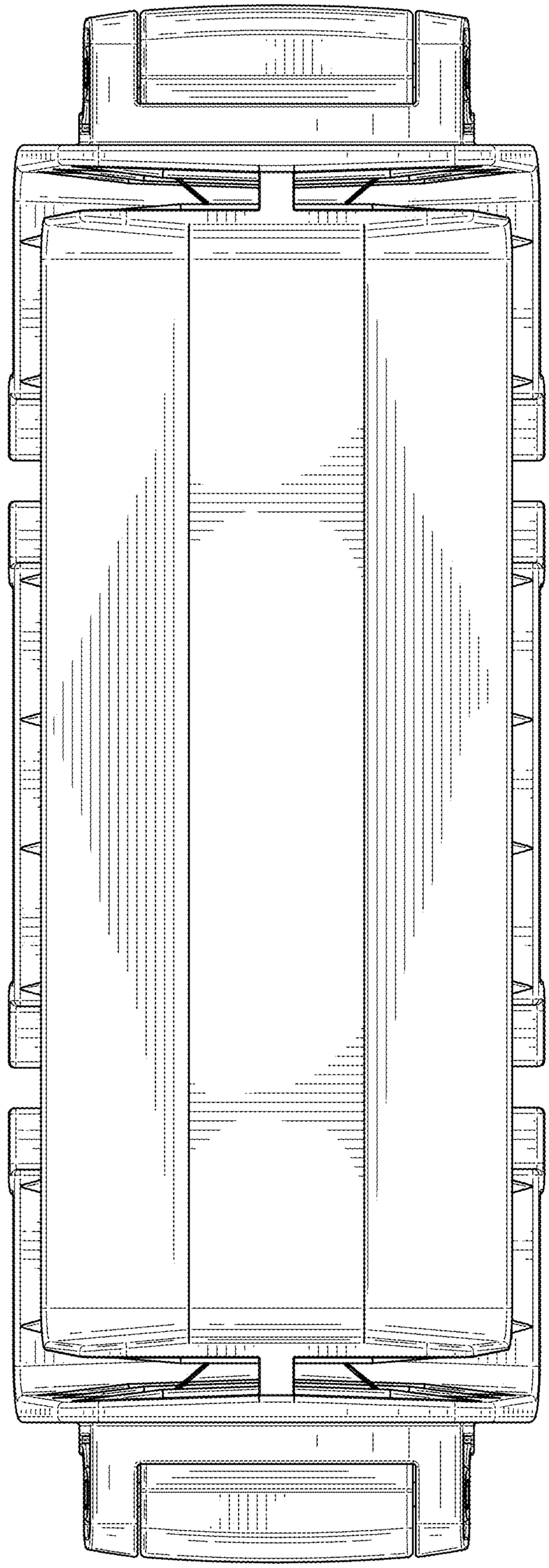

FIG. 23

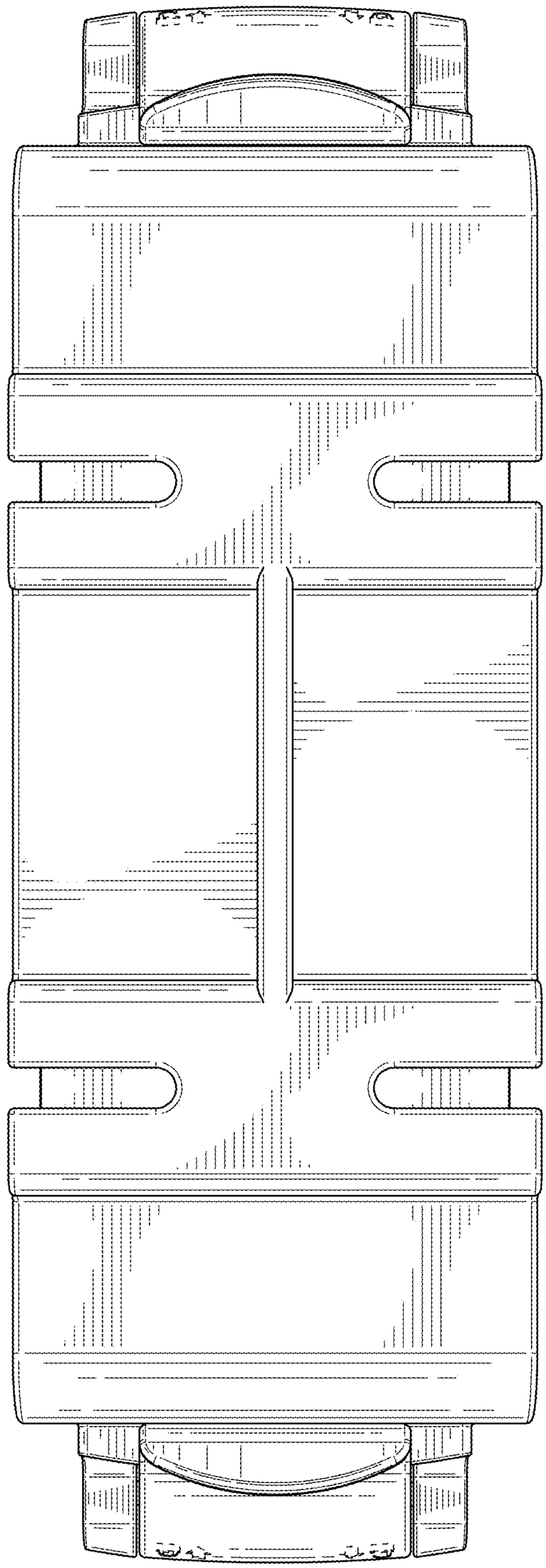

FIG. 24

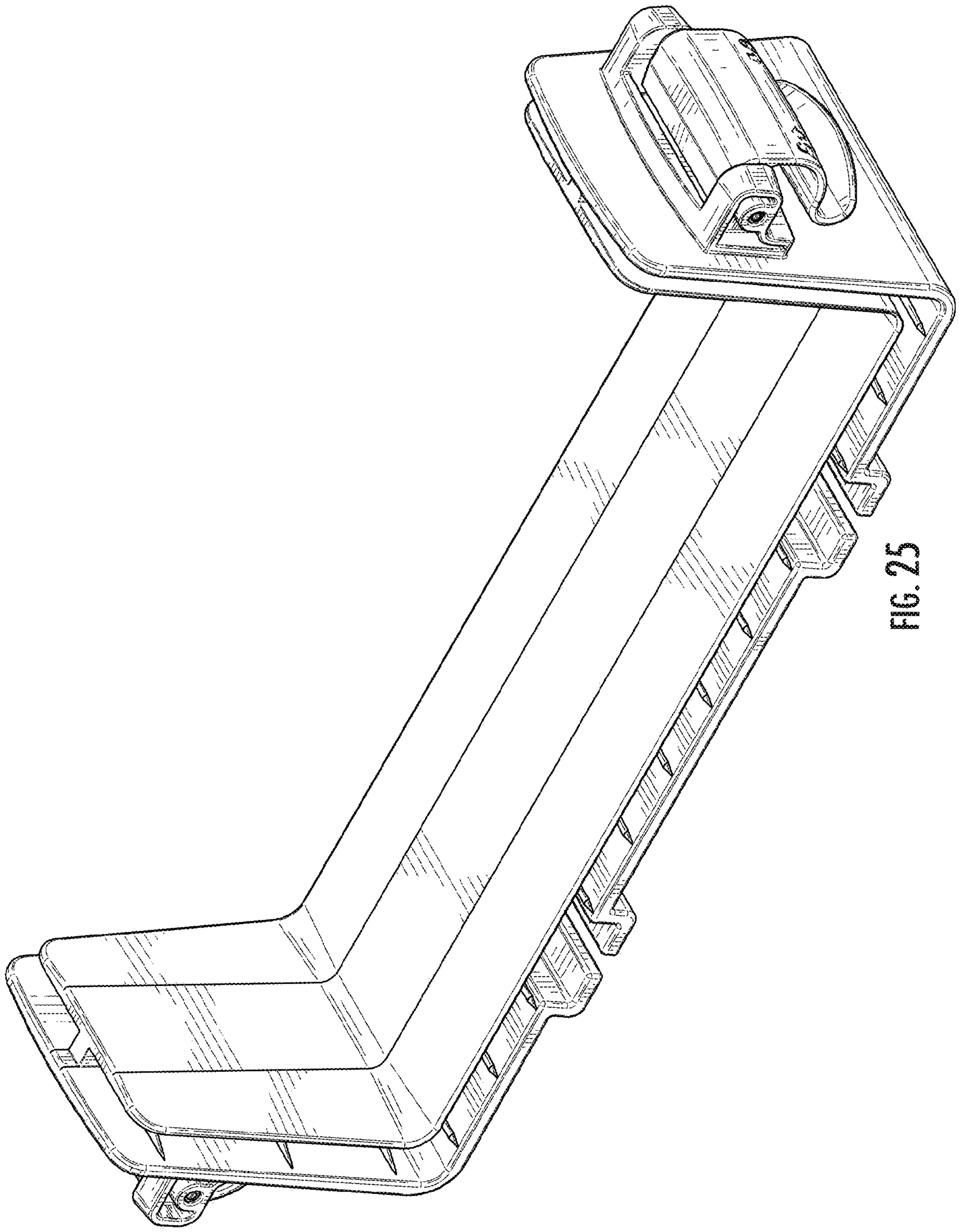

FIG. 25

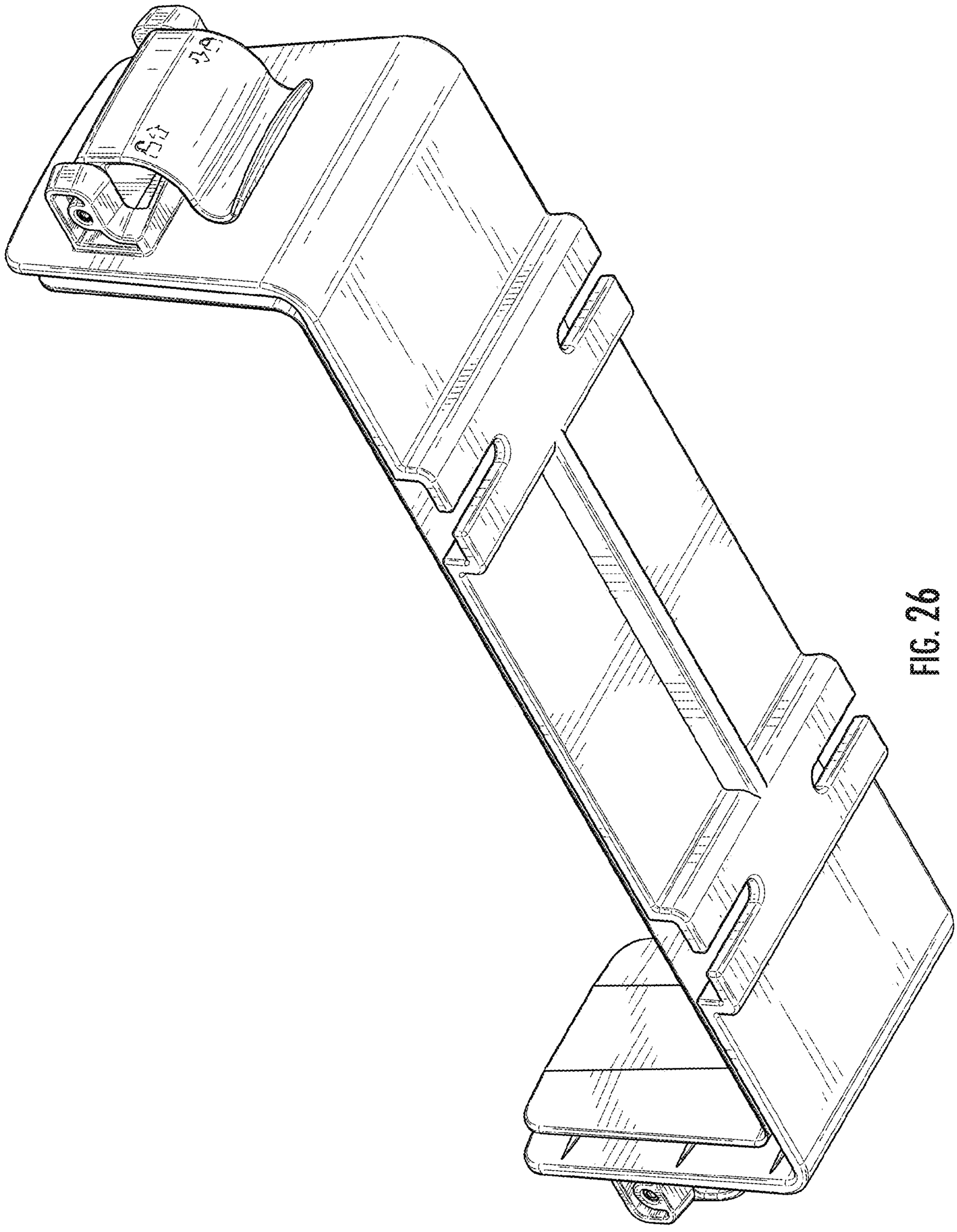

FIG. 26

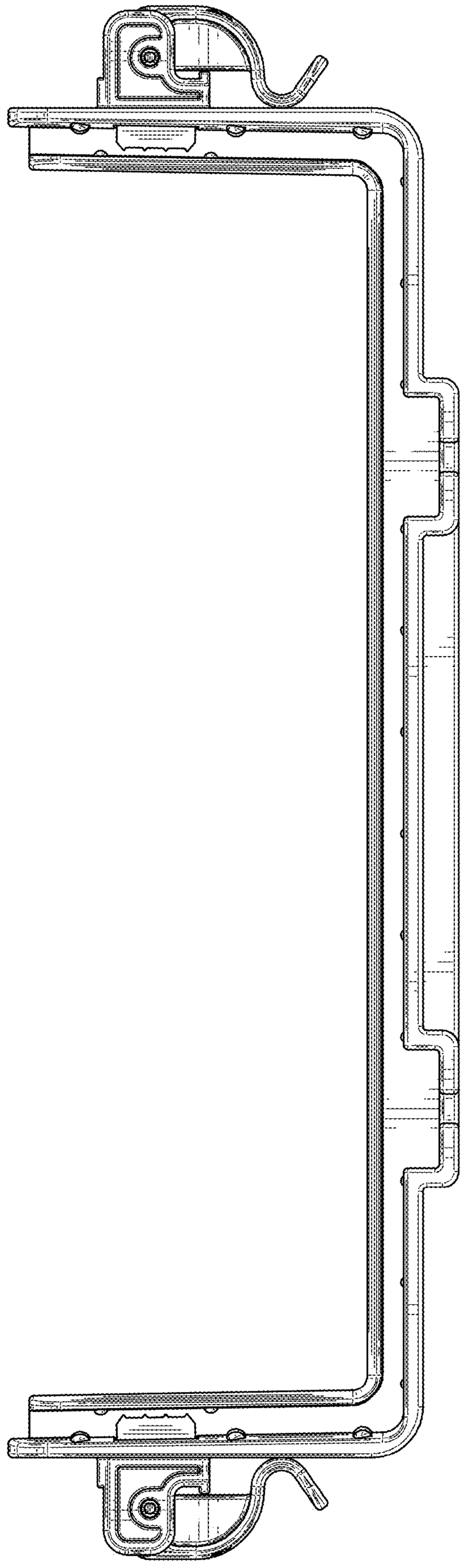

FIG. 27

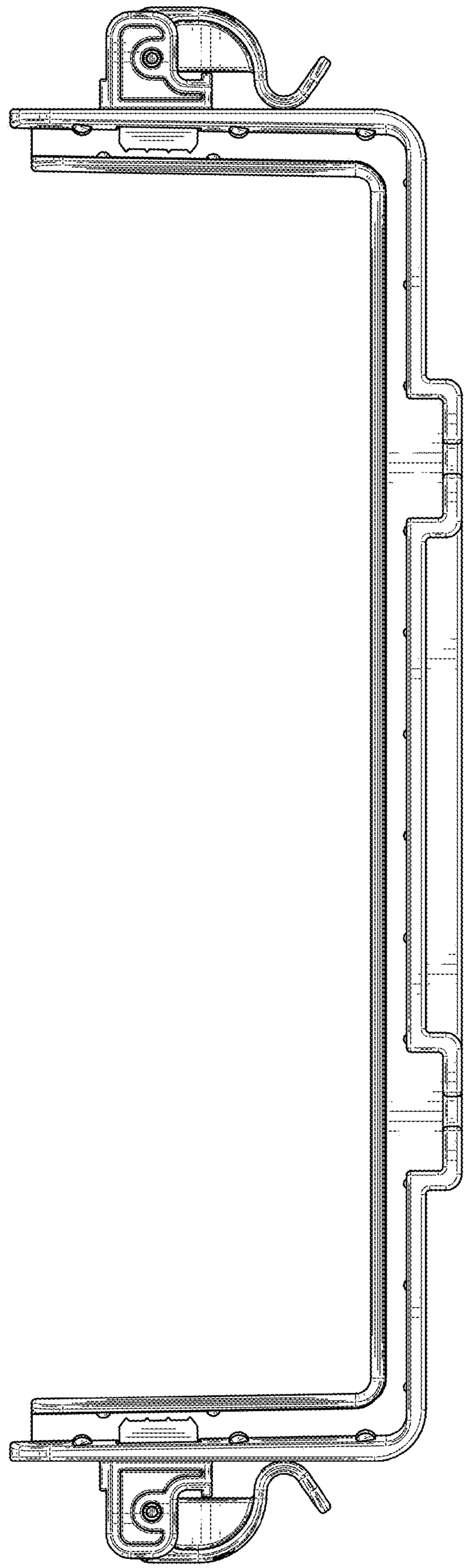

FIG. 28

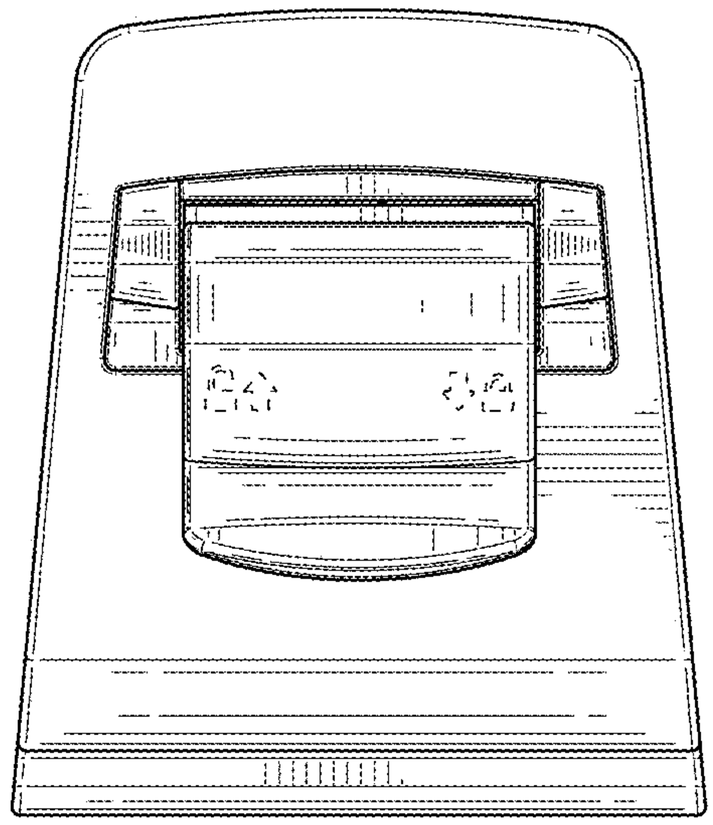

FIG. 29

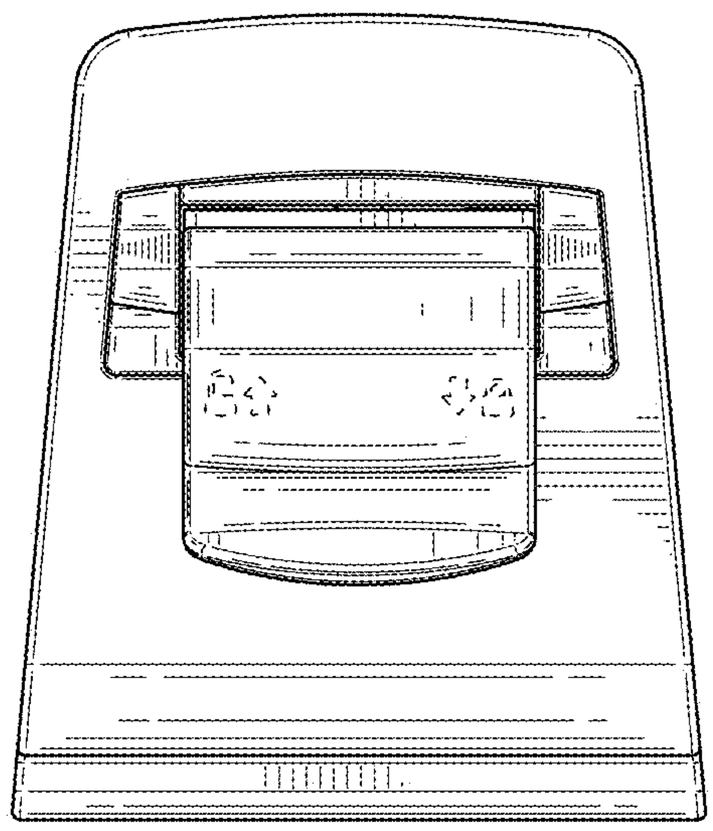

FIG. 30

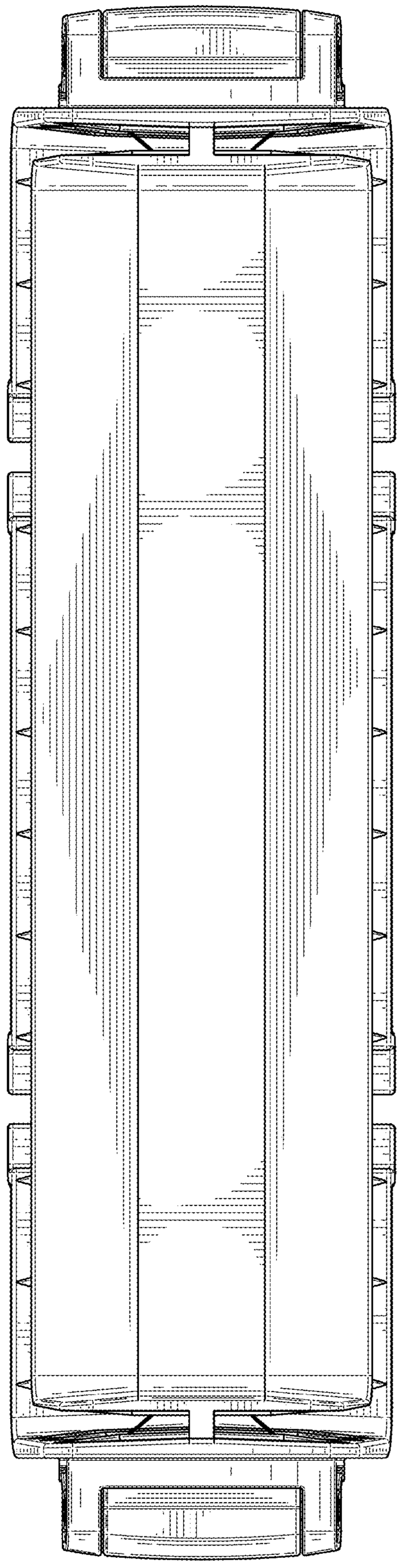

FIG. 31

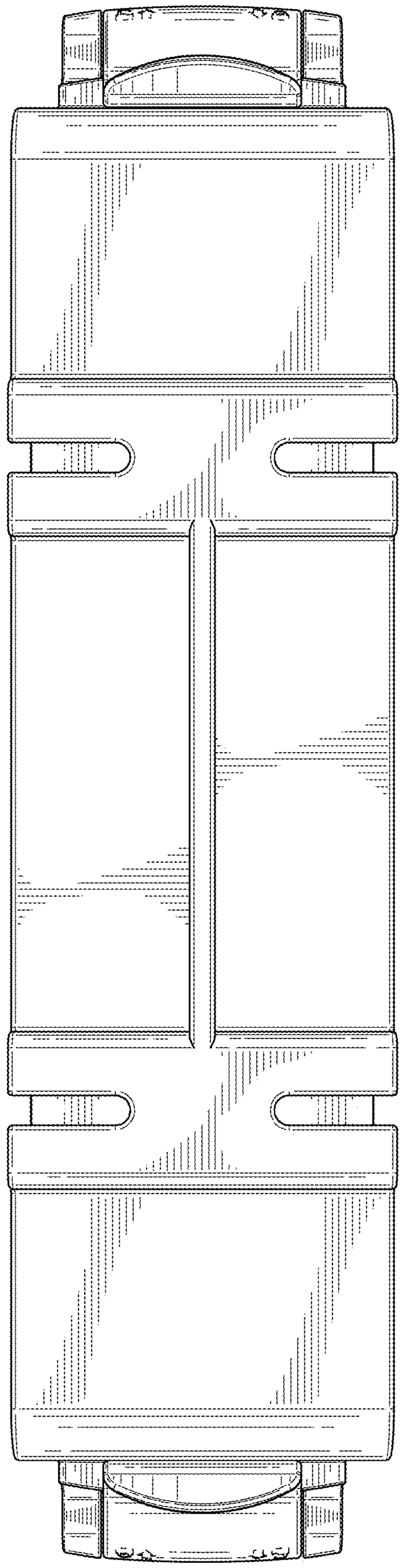

FIG. 32