US00D954073S

(12) United States Design Patent

Niklasson et al.

(10) Patent No.: US D954,073 S
(45) Date of Patent: ** Jun. 7, 2022

(54) **DISPLAY SCREEN OR PORTION THEREOF WITH ANIMATED GRAPHICAL USER INTERFACE**

(71) Applicant: **Polestar Performance AB**, Gothenburg (SE)

(72) Inventors: **Kim Niklasson**, Gothenburg (SE); **Jesper Nord**, Gothenburg (SE); **Fredrik Gruber**, Gothenburg (SE); **Dan Persson**, Gothenburg (SE); **Pär Heyden**, Gothenburg (SE)

(73) Assignee: **Polestar Performance AB**, Gothenburg (SE)

(**) Term: **15 Years**

(21) Appl. No.: **29/734,559**

(22) Filed: **May 13, 2020**

(51) **LOC (13) Cl.** **14-04**

(52) **U.S. Cl.**
USPC **D14/485**

(58) **Field of Classification Search**
USPC D14/485–495; D20/10, 11, 22–33, 39, D20/40
CPC G06F 3/048–04897; G06F 17/5095; G01C 21/36; G08G 1/0962; G08G 1/123; B60K 37/00; G06Q 30/0281; G06Q 10/06; G06Q 10/063114; G06Q 10/10; G06Q 10/109
See application file for complete search history.

(56) **References Cited**

U.S. PATENT DOCUMENTS

D624,927 S 10/2010 Allen et al.
D656,157 S 3/2012 Khan et al.
D689,510 S 9/2013 Rodrigues et al.
8,597,093 B2 12/2013 Engelberg et al.
D757,036 S 5/2016 Raskin et al.
D758,424 S 6/2016 Ding et al.
D758,443 S * 6/2016 Kang D14/492
D767,604 S 9/2016 Wiley et al.
D776,702 S 1/2017 Huang et al.
(Continued)

OTHER PUBLICATIONS

Polestar App Entry Concept, by Kormis, dribbble.com [online], published on Sep. 10, 2018, [retrieved on Jan. 29, 2021], retrieved from the Internet <URL: https://dribbble.com/shots/5141580-Polestar-App-Entry-Concept> (Year: 2018).*
(Continued)

Primary Examiner — Ian F Whitmore
(74) *Attorney, Agent, or Firm* — Patterson Thuente Pedersen, P.A.

(57) **CLAIM**

We claim the ornamental design for a display screen or portion thereof with animated graphical user interface, as shown and described.

DESCRIPTION

FIG. **1** is a front view of a display screen or portion thereof with animated graphical user interface showing a first image.
FIG. **2** is the second image thereof.
FIG. **3** is the third image thereof.
FIG. **4** is the fourth image thereof; and,
FIG. **5** is the fifth image thereof.
The appearance of the animated image sequentially transitions between the images shown in FIGS. **1-5**. The process or period in which one image transitions to another forms no part of the claimed design.
The inner round-cornered vertically-oriented broken-line rectangle illustrates the perimeter of a display screen. The broken lines outside this perimeter illustrate an electronic device. The broken lines within this perimeter illustrate portions of the graphical user interface. The broken lines form no part of the claimed design.

1 Claim, 5 Drawing Sheets

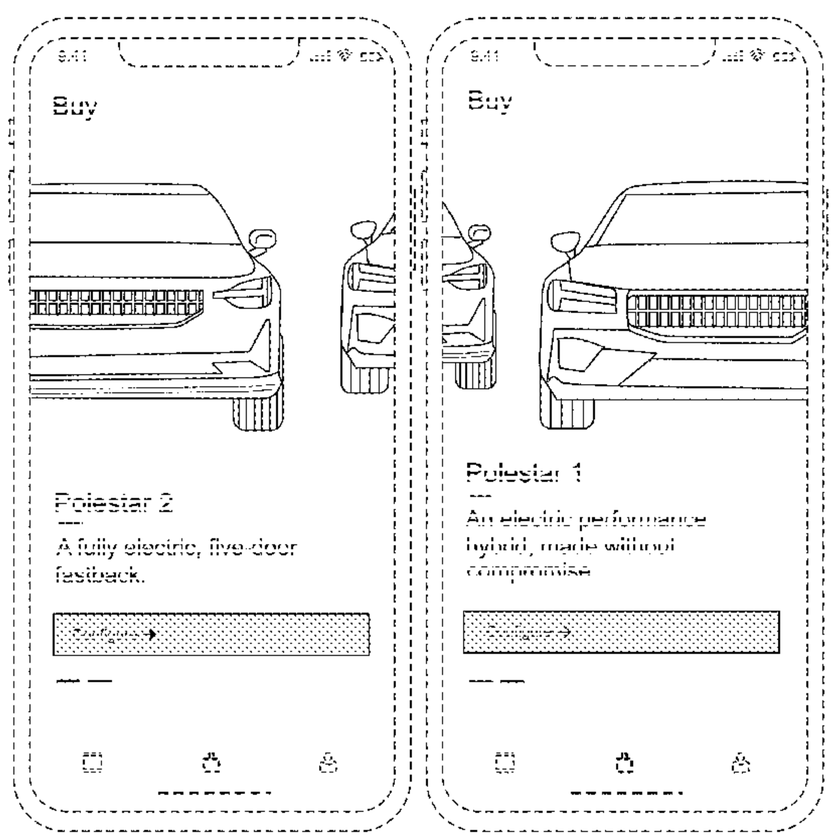

(56) **References Cited**

U.S. PATENT DOCUMENTS

D791,156	S	*	7/2017	Chen	D14/486
D797,753	S		9/2017	Agarwal	
D813,264	S		3/2018	Tussy	
D815,659	S		4/2018	Spector	
D819,648	S		6/2018	Hasaballah et al.	
D819,695	S		6/2018	Rowe et al.	
D820,312	S	*	6/2018	Rowe	D14/492
D831,060	S		10/2018	Bachman et al.	
D832,287	S		10/2018	Chaudhri et al.	
D834,602	S		11/2018	Bao	
D836,124	S		12/2018	Fan	
D837,260	S		1/2019	Lee et al.	
D838,733	S		1/2019	Grossman et al.	
D840,425	S		2/2019	VanDuyn et al.	
D845,323	S		4/2019	Clediere et al.	
D851,110	S		6/2019	Bang et al.	
D854,043	S		7/2019	van Zyl et al.	
D859,446	S	*	9/2019	Westerhold	D14/486
D863,329	S		10/2019	Hu	
D869,487	S		12/2019	Barthold et al.	
D882,623	S		4/2020	van Zyl et al.	
D887,424	S		6/2020	Fukushima et al.	
D889,508	S		7/2020	Kane et al.	
D896,242	S		9/2020	Pitta et al.	
D900,124	S		10/2020	Matas	
D900,844	S		11/2020	VanDuyn et al.	
D903,703	S		12/2020	Lindberg	
D905,085	S		12/2020	Lindberg	
D905,096	S	*	12/2020	Zimmer	D14/488
D905,723	S	*	12/2020	Lundin	D14/486
D906,361	S		12/2020	Kunzman	
D906,365	S	*	12/2020	Farmer	D14/489
10,904,211	B2		1/2021	Cholleton	
D910,697	S		2/2021	Lemay et al.	
D911,382	S		2/2021	Devine et al.	
D915,435	S	*	4/2021	Yan	D14/486
D916,734	S		4/2021	Kuroda et al.	
D916,766	S		4/2021	McGee et al.	
D916,786	S		4/2021	Clediere et al.	
D916,794	S		4/2021	Li et al.	
D916,814	S	*	4/2021	Westerhold	D14/486
D916,844	S		4/2021	Liu	
D916,917	S		4/2021	Stipech et al.	
D917,518	S	*	4/2021	Lunaparra	D14/486
D917,522	S		4/2021	Navasca	
10,969,949	B2	*	4/2021	Teshima	G06F 3/04845
D918,236	S		5/2021	Kim et al.	
D918,930	S		5/2021	Dill et al.	
11,003,325	B2		5/2021	Ku et al.	
D921,697	S	*	6/2021	Hong	D14/490
D922,399	S	*	6/2021	Desai	D14/485
D922,419	S	*	6/2021	Lynne	D14/486
D927,521	S	*	8/2021	Hartman	D14/486
D934,275	S		10/2021	Paul	
D937,863	S		12/2021	Choi et al.	
D938,462	S		12/2021	Choi et al.	
2014/0059483	A1		2/2014	Mairs et al.	
2014/0282016	A1		9/2014	Hosier, Jr.	
2014/0283142	A1		9/2014	Shepherd et al.	
2015/0074573	A1	*	3/2015	Teshima	G06F 3/04883 715/765
2015/0319203	A1	*	11/2015	Jeremias	G06Q 30/0641 715/753
2015/0332424	A1		11/2015	Kane et al.	
2017/0282717	A1		10/2017	Jang et al.	
2018/0374571	A1		12/2018	Garner et al.	
2019/0312985	A1	*	10/2019	Yeap	G06K 9/3208

OTHER PUBLICATIONS

Car Explorer 360, by Cleveroad, dribbble.com [online], published on May 17, 2016, [retrieved on Jan. 29, 2021], retrieved from the Internet <URL: https://dribbble.com/shots/2719523-Car-Explorer-360-Animation> (Year: 2016).*

Polestar, appadvice.com [online], published on Dec. 16, 2020, [retrieved on Jan. 29, 2021], retrieved from the Internet <URL: https://appadvice.com/app/polestar/1451196635> (Year: 2020).*

Luxury Car Rental, by Nikonorov, dribbble.com [online], published on Feb. 18, 2019, [retrieved on Jan. 29, 2021], retrieved from the Internet <URL: https://dribbble .com/shots/6037210-Luxury-Car-Rental > (Year: 2019).

Paralax with Studio Car App, by Ernest, dribbble.com [online], published on Sep. 7, 2018, [retrieved on Jan. 29, 2021], retrieved from the Internet <URL: https://dribbble.com/shots/5130901-Paralax-with-studio-Car-app-ios> (Year: 2018).

Car Rental App—Concept, by Nabyl, dribbble.com [online], published on Sep. 14, 2019, [retrieved on Jan. 29, 2021], retrieved from the Internet <URL: https://dribbble.com/shots/7145688-Car-Rental-App-Concept> (Year: 2019).

Tab Bar Interaction v2, by Aashish, dribbble.com [online], published on Nov. 6, 2019, [retrieved on Jan. 29, 2021], retrieved from the Internet <URL:https://dribbble.com/shots/5506086-Tab-Bar-Interaction-v2> (Year: 2019).

Google: 5 Android Apps That Are Yet "Undiscovered" by Users, Salim, digitalinformationworlds.com [online], published on Dec. 7, 2018, [retrieved on Jan. 30, 2021], retrieved from the Internet <URL: https://www.digitalinformationworld.com/2018/12/google-named-5-hidden-gem-android-apps.html > (Year: 2018).

9GAG Nine Years App, by Hitchcock, dribbble.com [online], published on Sep. 30, 2019, [retrieved on Feb. 4, 2021], retrieved from the Internet <URL: https://dribbble.com/shots/7279125-9GAG-Nine-Years-App> (Year: 2019).

iOS Design Guidelines, by Kennedy, learnui.design [online], published on Feb. 12, 2020, [retrieved on Feb. 4, 2021], retrieved from the Internet <URL: https://learnui.design/blog/ios-design-guidelines-templates.html> (Year: 2020).

Application and File history for U.S. Appl. No. 29/734,558, filed May 13, 2020. Inventors: Niklasson et al.

Application and File history for U.S. Appl. No. 29/734,560, filed May 13, 2020. Inventors: Niklasson et al.

Application and File history for U.S. Appl. No. 29/734,561, filed May 13, 2020. Inventors: Niklasson et al.

App Car Repair Concept, by Sibiriakov, dribble.com [online], published on Jun. 7, 2019, [retrieved on Jan. 29, 2021], the Internet <URL: https://dribble.com/shots/6597042-App-car-repair-concept> (Year: 2019).

* cited by examiner

FIG. 1

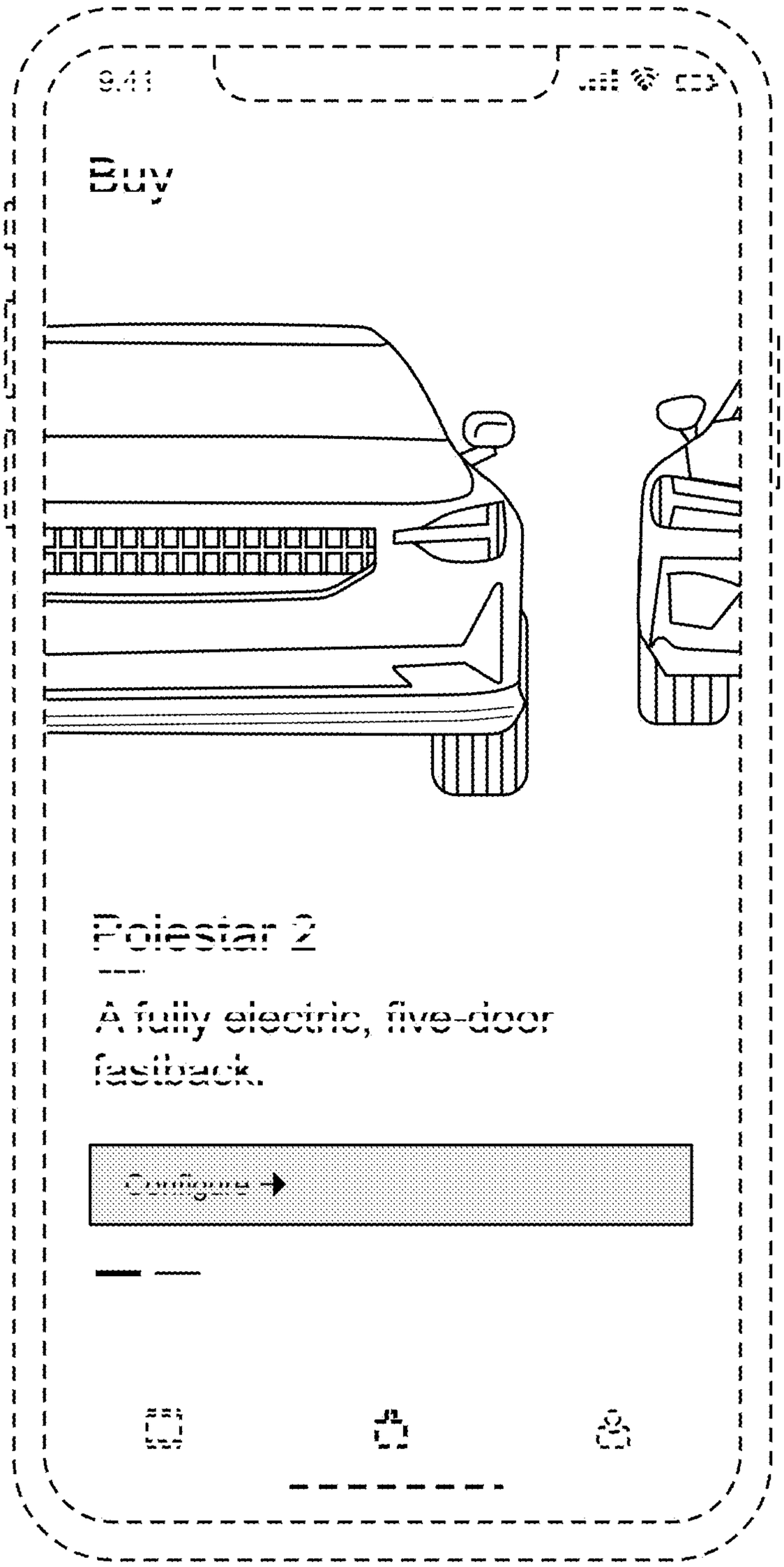
9:41
Buy
Polestar 2
A fully electric, five-door fastback.
Configure

FIG. 2

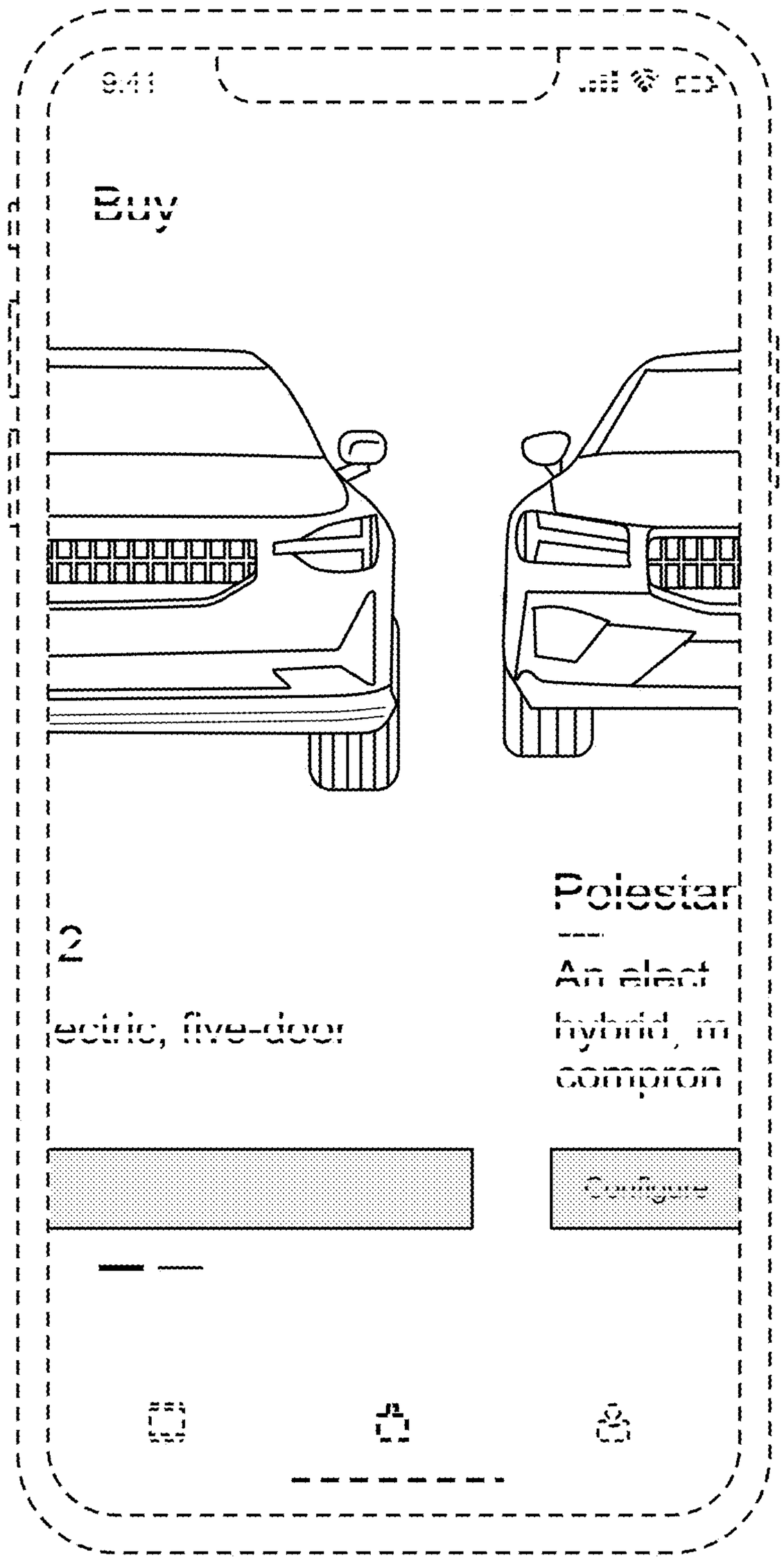
9:41
Buy
2
ectric, five-door
Polestar

An elect
hybrid, m
compron
Configure

FIG. 3

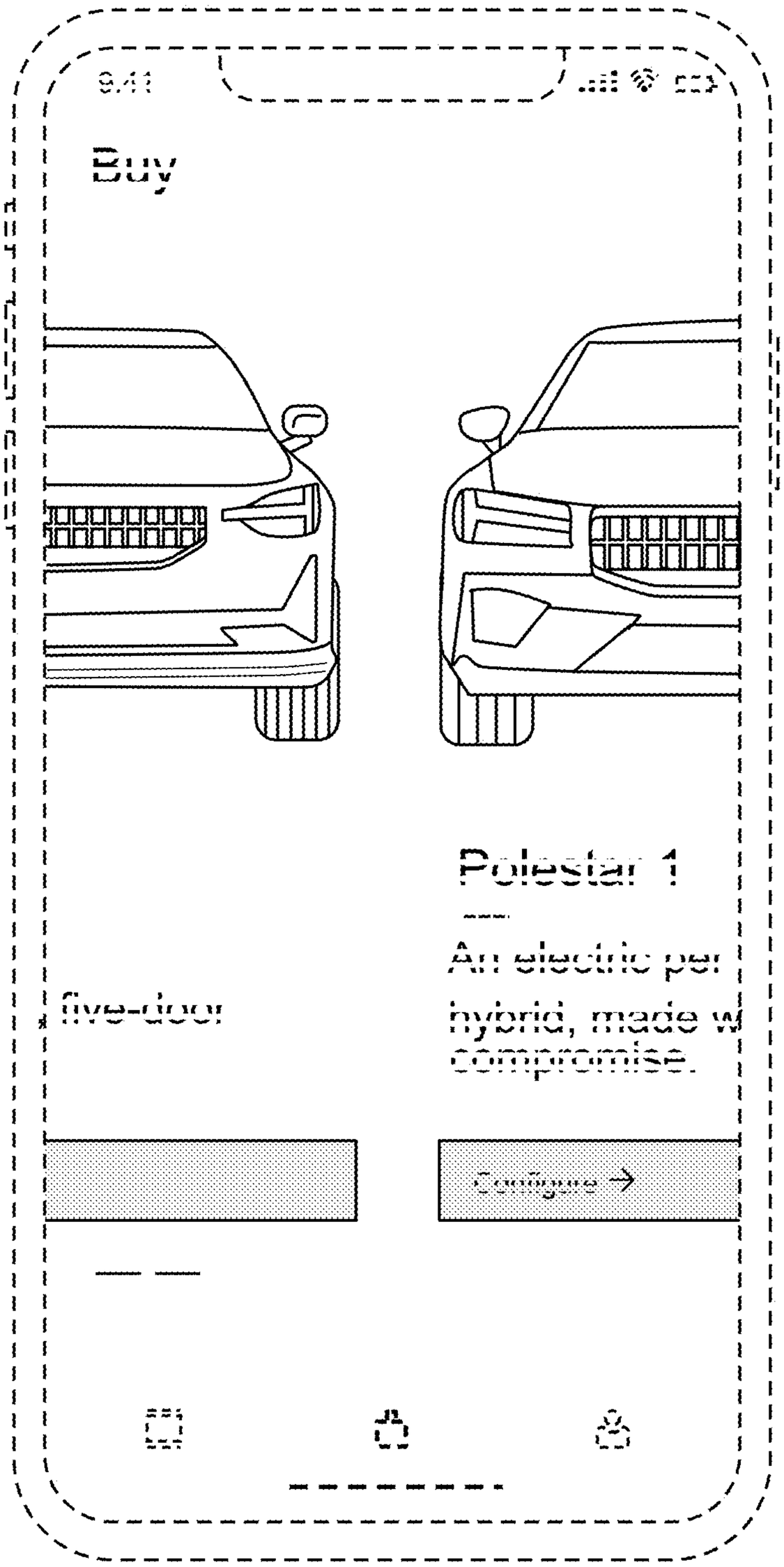
9:41
Buy
Polestar 1
An electric per
hybrid, made w
compromise.
five-door
Configure →

FIG. 4

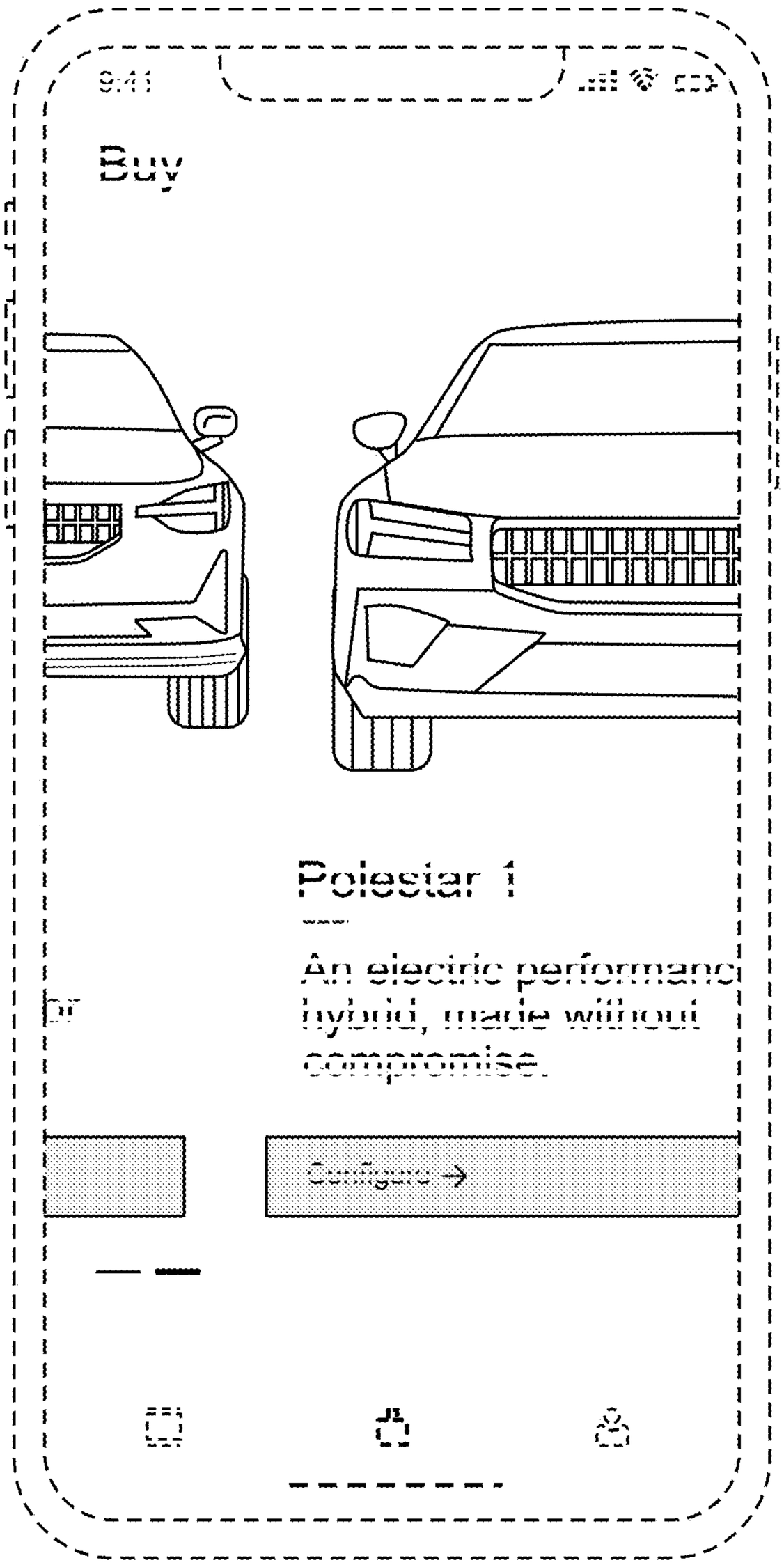
9:41
Buy
Polestar 1
An electric performanc
hybrid, made without
compromise.
Configure →

FIG. 5

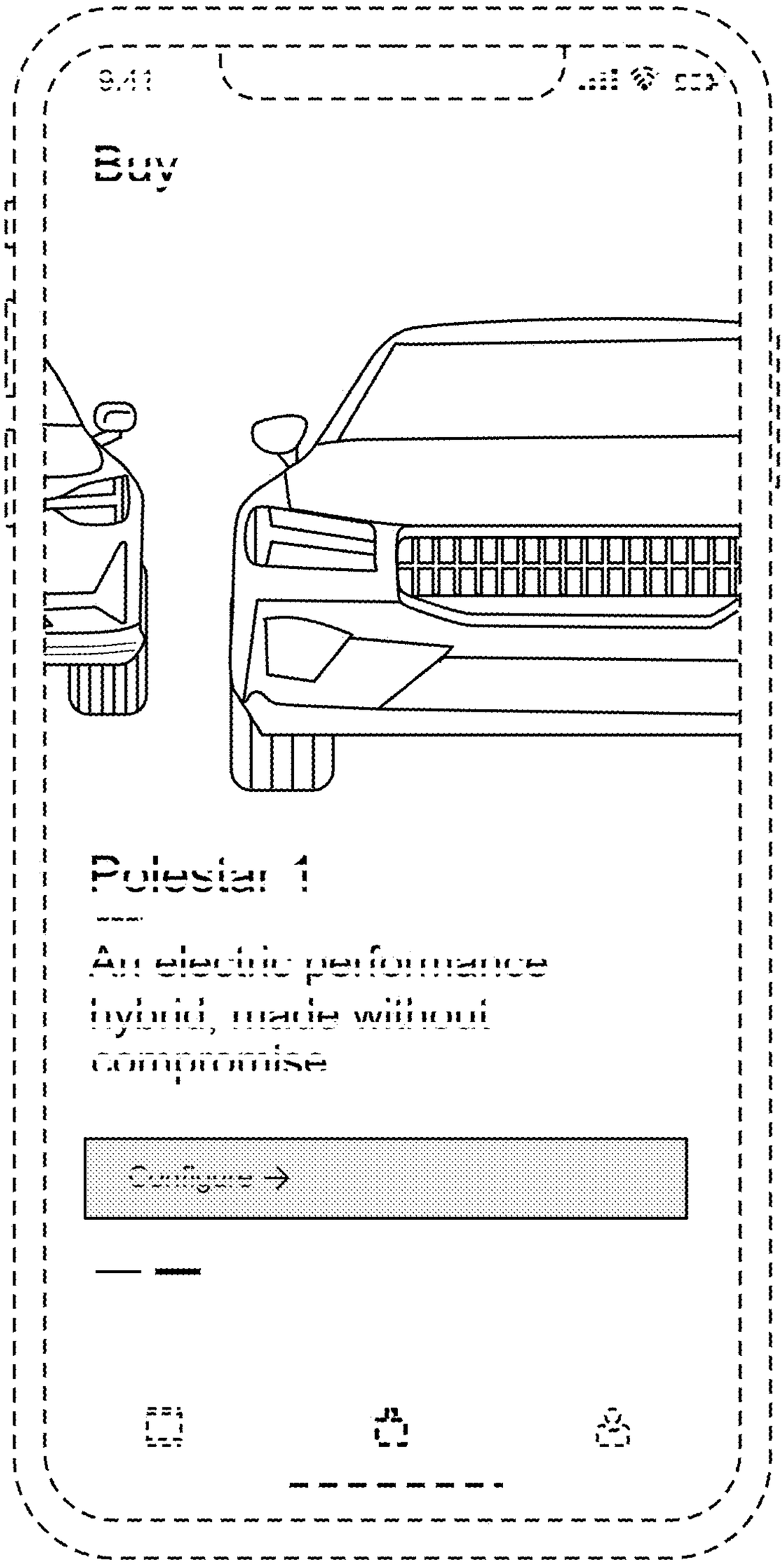
9:41
Buy
Polestar 1
An electric performance hybrid, made without compromise
Configure →