US00D953586S

(12) United States Design Patent
Pribula

(10) Patent No.: US D953,586 S
(45) Date of Patent: ** May 31, 2022

(54) **DOT-BULLET TURN SIGNAL**

(71) Applicant: **Custom Dynamics LLC**, Youngsville, NC (US)

(72) Inventor: **David Pribula**, Wake Forest, NC (US)

(73) Assignee: **Custom Dynamics LLC**, Youngsville, NC (US)

(**) Term: **15 Years**

(21) Appl. No.: **29/708,208**

(22) Filed: **Oct. 4, 2019**

(51) **LOC (13) Cl.** **26-06**

(52) **U.S. Cl.**
USPC **D26/31**

(58) **Field of Classification Search**
USPC D26/28–36, 139
CPC F21S 48/00; F21S 48/10; F21S 48/115; F21S 48/225; F21S 48/1233; F21S 48/1266; F21S 48/1388; F21S 48/2268; F21V 5/00; F21V 21/04; F21V 29/004; B60Q 9/13; B60Q 9/135; B60Q 9/1375
See application file for complete search history.

(56) **References Cited**

U.S. PATENT DOCUMENTS

D490,172 S * 5/2004 Yamamoto D26/28
D521,162 S * 5/2006 Campagna D26/28
D570,011 S * 5/2008 Huang D26/28
D638,963 S * 5/2011 Huang D26/28
D815,325 S * 4/2018 Chi D26/31
D830,597 S 10/2018 Morelock

OTHER PUBLICATIONS

Website, "JAE Bullet Ringz for 2016-2019 CVO," https://www.customdynamics.com/jae-bullet-ringz?cat=, Custom Dynamics LLC, obtained Oct. 3, 2019.
Chinese Patent Office Action for Application No. 201930574449.2 dated Mar. 2, 2020 (2 pages, statement of relevance included).

* cited by examiner

Primary Examiner — Marcus A Jackson
(74) *Attorney, Agent, or Firm* — Coats & Bennett, PLLC

(57) **CLAIM**

The ornamental design for a DOT-bullet turn signal, as shown and described.

DESCRIPTION

FIG. **1** is a perspective view of the DOT-bullet turn signal.
FIG. **2** is top plane view of the top plane of the DOT-bullet turn signal.
FIG. **3** is a side plane view of the side end of the DOT-bullet turn signal. Each side plane view of the sides of the DOT-bullet turn signal is identical; and,
FIG. **4** is a bottom plane view of the bottom plane of the DOT-bullet turn signal.

1 Claim, 4 Drawing Sheets

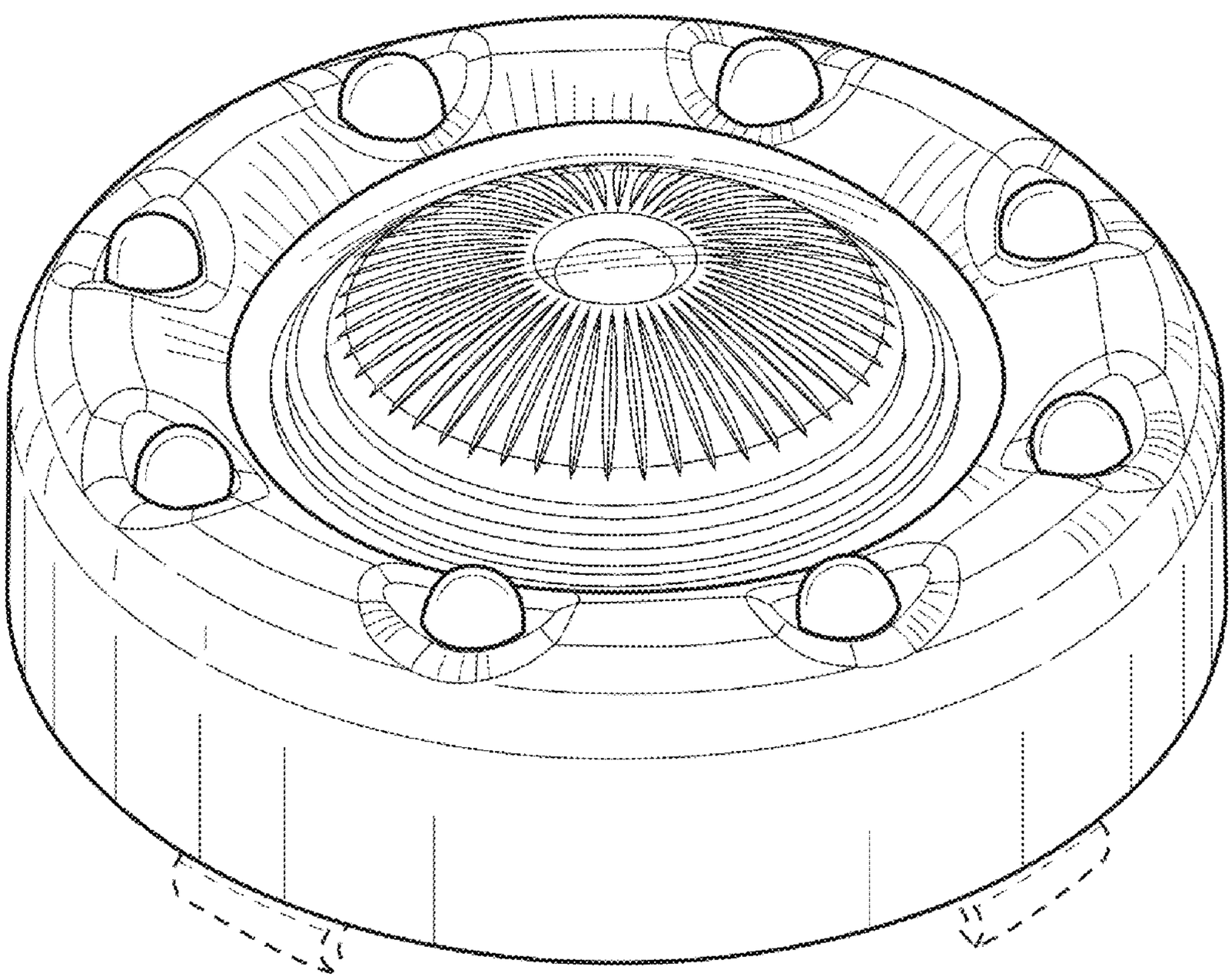

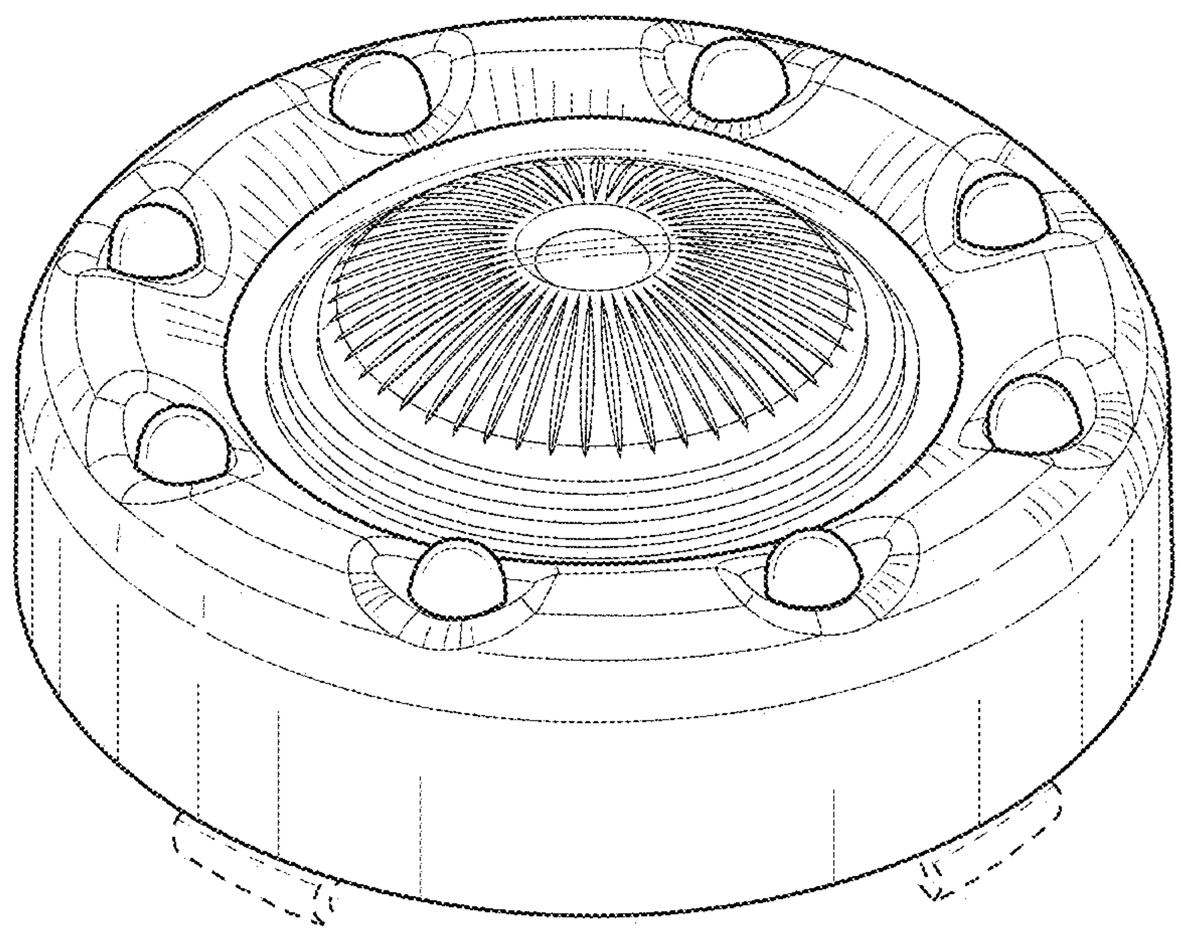

FIG. 1

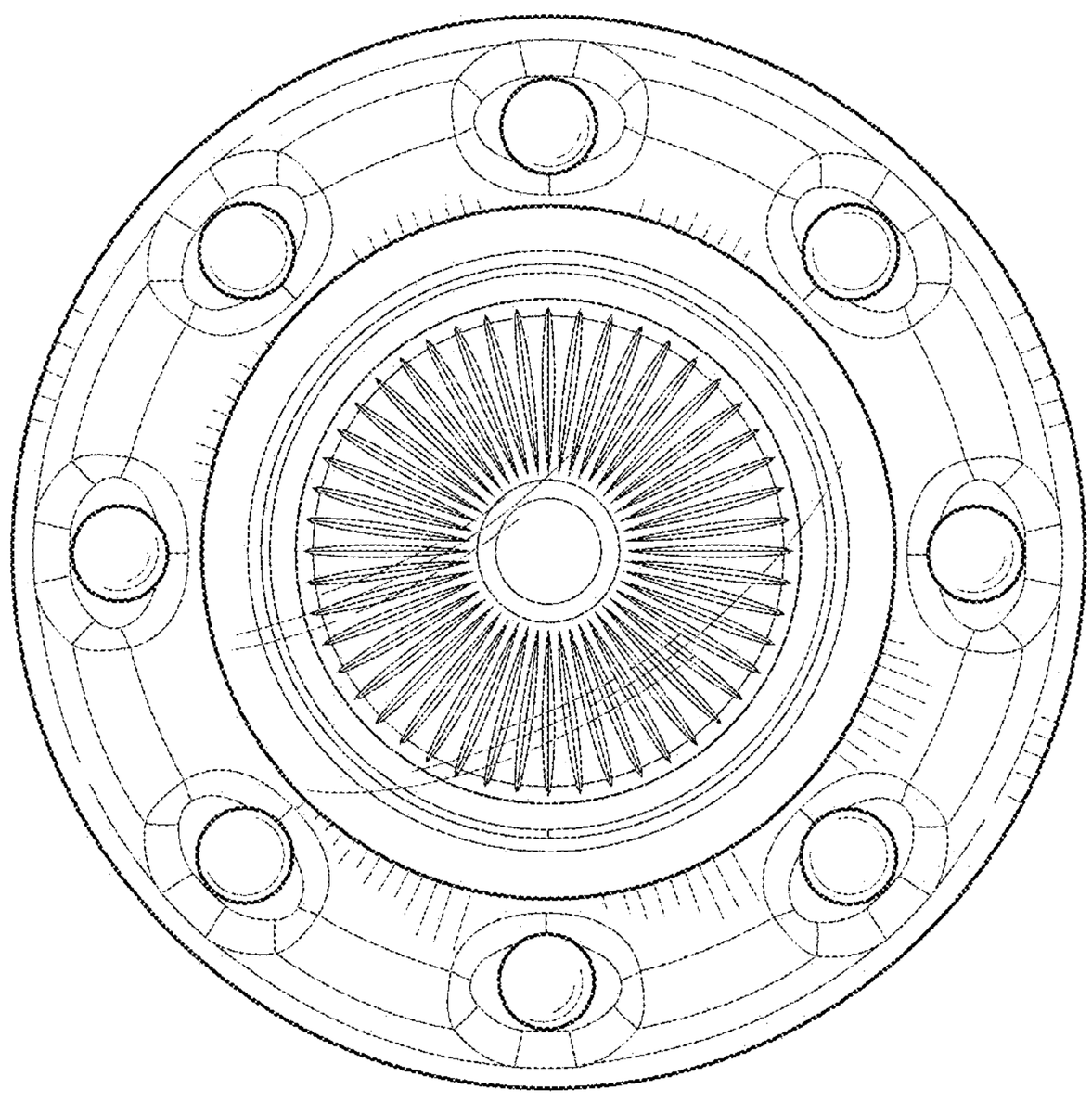

FIG. 2

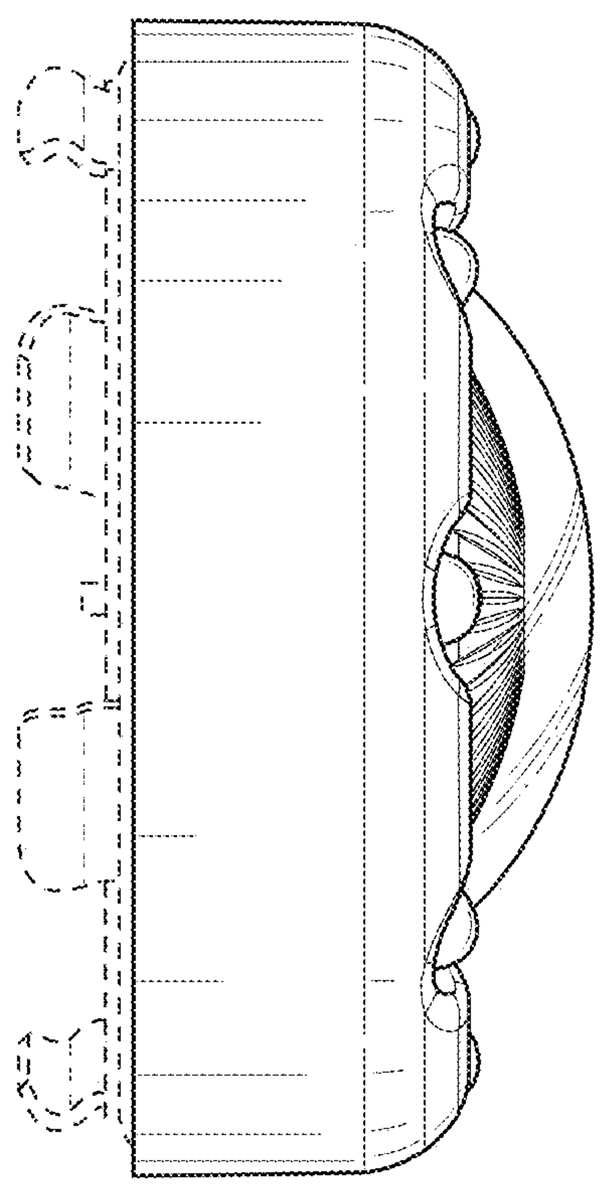

FIG. 3

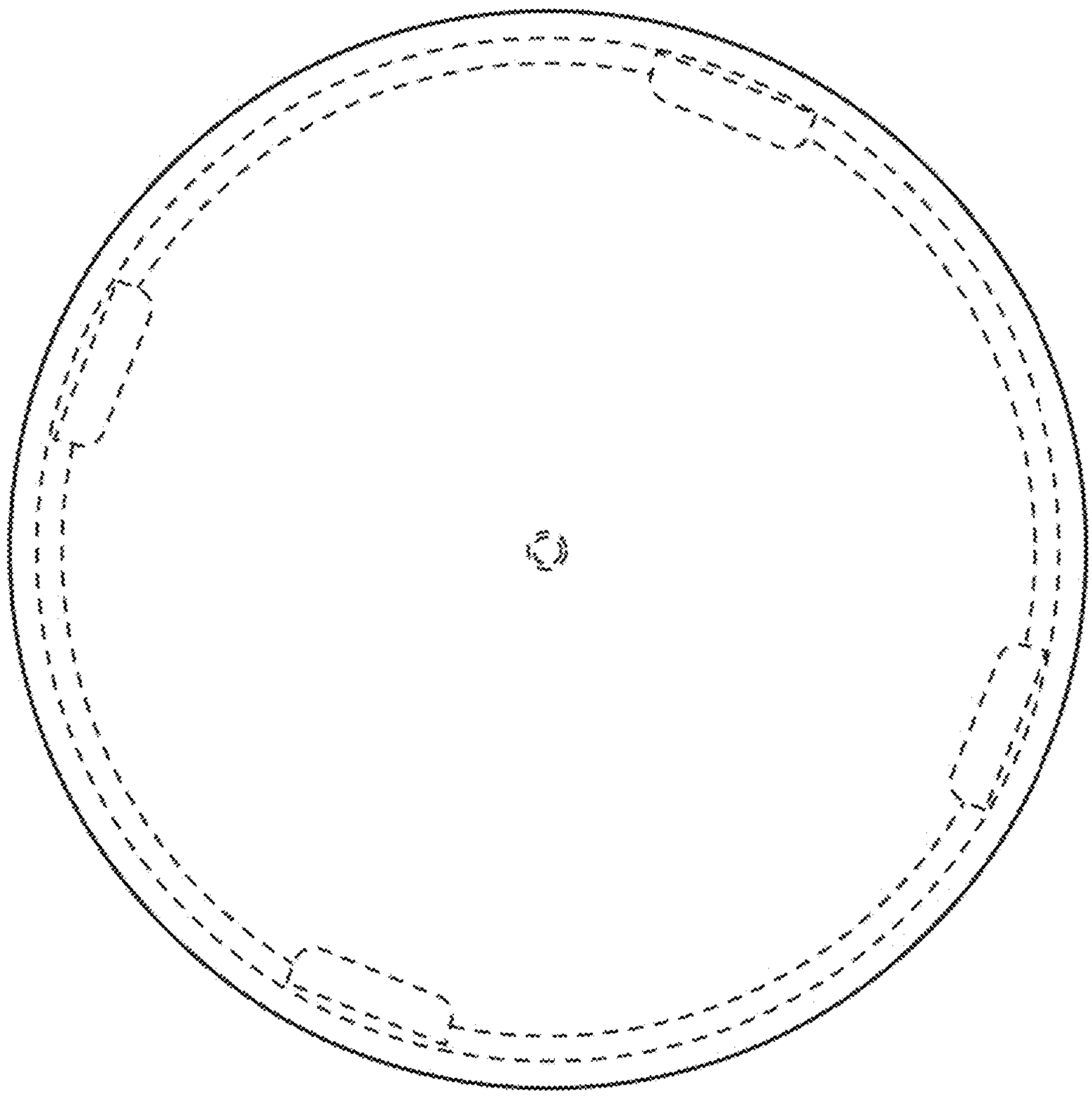

FIG. 4