US00D952705S

(12) United States Design Patent

Yoon et al.

(10) Patent No.: US D952,705 S
(45) Date of Patent: ** May 24, 2022

(54) **PANEL FOR REFRIGERATOR**

(71) Applicant: **SAMSUNG ELECTRONICS CO., LTD.**, Suwon-si (KR)

(72) Inventors: **Kisang Yoon**, Suwon-si (KR); **Suyeon Park**, Suwon-si (KR); **Seonju Lee**, Suwon-si (KR); **Aeryun Kim**, Suwon-si (KR); **Jaemin Lee**, Suwon-si (KR)

(73) Assignee: **Samsung Electronics Co., Ltd.**, Suwon-si (KR)

(**) Term: **15 Years**

(21) Appl. No.: **29/717,802**

(22) Filed: **Dec. 19, 2019**

(30) **Foreign Application Priority Data**

Aug. 8, 2019 (KR) 30-2019-0037974

(51) **LOC (13) Cl.** **15-07**

(52) **U.S. Cl.**
USPC **D15/91**

(58) **Field of Classification Search**
USPC D15/79, 81, 82, 85, 86, 87, 88, 89, 91
(Continued)

(56) **References Cited**

U.S. PATENT DOCUMENTS

D657,804 S * 4/2012 Lee D15/86
D719,589 S * 12/2014 Park D15/89
(Continued)

OTHER PUBLICATIONS

"Fhiaba Installation Series: Part 8—Preparing the Appliance for Panel Application" [online], The Vetta Group Fhiaba Channel. [Published on Apr. 24, 2014], Retrieved from the Internet: <https://www.youtube.com/watch?v=rCP36WSBAVc>.*

Primary Examiner — Mojtaba Tehrani
(74) *Attorney, Agent, or Firm* — NSIP Law

(57) **CLAIM**

We claim the ornamental design for a panel for refrigerator, as shown and described.

DESCRIPTION

FIG. **1** is a front perspective view of a panel for refrigerator showing our new design;
FIG. **2** is a front view thereof;
FIG. **3** is a rear view thereof;
FIG. **4** is a left-side view thereof;
FIG. **5** is a right-side view thereof;
FIG. **6** is a top view thereof;
FIG. **7** is a bottom view thereof;
FIG. **8** is a rear perspective view thereof;
FIG. **9** is an enlarged view of the encircled portion in FIG. **1**;
FIG. **10** is an enlarged view of the encircled portion in FIG. **4**;
FIG. **11** is an enlarged view of the encircled portion in FIG. **6**;
FIG. **12** is an enlarged view of the encircled portion **12** in FIG. **8**;
FIG. **13** is an enlarged view of the encircled portion **13** in FIG. **8**; and,
FIG. **14** is an exploded front perspective view thereof, shown in an environment of use with an example refrigerator.
The dash-dash broken lines in the figures showing portions of the panel for refrigerator form no part of the claimed design.
The dash-dash broken lines in FIG. **14** illustrating a refrigerator are environment and form no part of the claimed design.
The dot-dot-dash broken lines encircling portions of the claimed design that are illustrated in enlargements form no part of the claimed design.

1 Claim, 12 Drawing Sheets

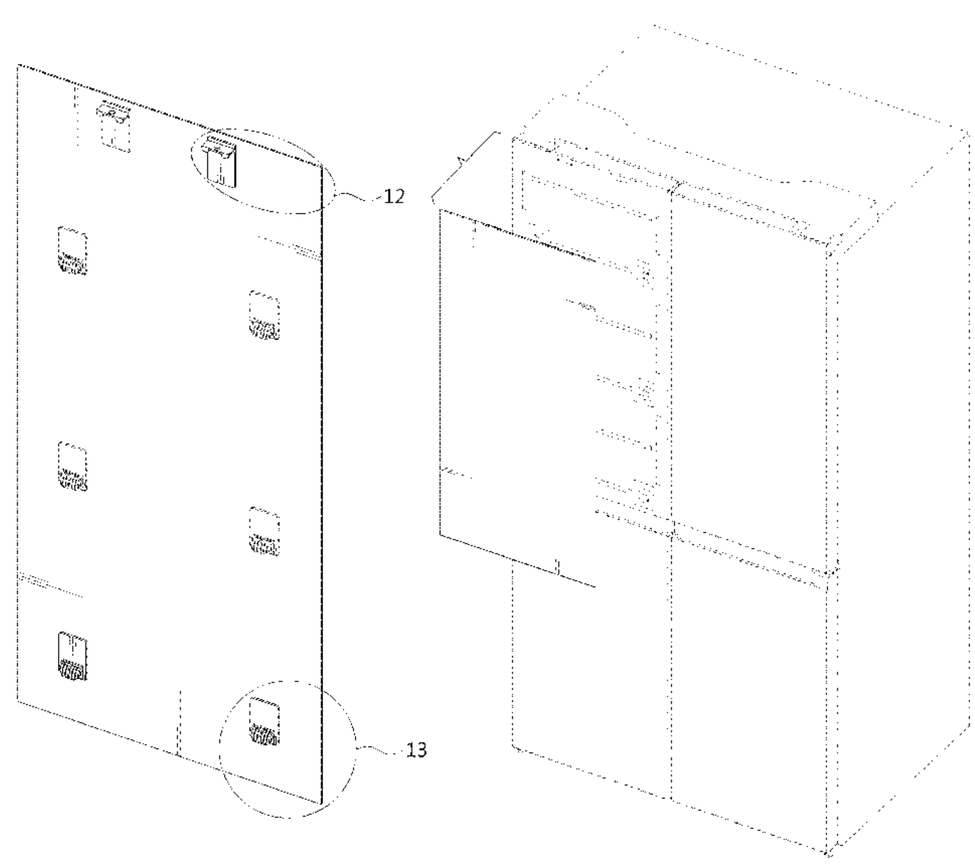

(58) **Field of Classification Search**
CPC F25C 2400/10; F25D 2400/10; F25D 2400/12; F25D 2400/14; F25D 2400/18; G05B 2219/2654; G09F 23/0058; Y10S 292/71
See application file for complete search history.

(56) **References Cited**

U.S. PATENT DOCUMENTS

D771,160	S	*	11/2016	Park	D15/91
D771,161	S	*	11/2016	Park	D15/91
D869,518	S	*	12/2019	Lee	D15/85
D921,711	S	*	6/2021	Lee	D15/85
D921,712	S	*	6/2021	Lee	D15/86
D921,713	S	*	6/2021	Lee	D15/86
D921,714	S	*	6/2021	Yoon	D15/86
11,047,613	B1	*	6/2021	Park	A47B 96/201
D933,110	S	*	10/2021	Lee	D15/86
2010/0154462	A1	*	6/2010	Arzoz Barandalla	F25D 23/028 62/449
2010/0156260	A1	*	6/2010	Arzoz Barandalla	F25D 23/028 312/405
2010/0170290	A1	*	7/2010	Arzoz Barandalla	F25D 23/028 62/449
2011/0025173	A1	*	2/2011	Ciyanoglu	A47B 77/08 312/204
2012/0169196	A1	*	7/2012	Marchetti	E06B 3/721 312/265.6
2020/0326119	A1	*	10/2020	Lee	F25D 23/02

* cited by examiner

FIG. 1

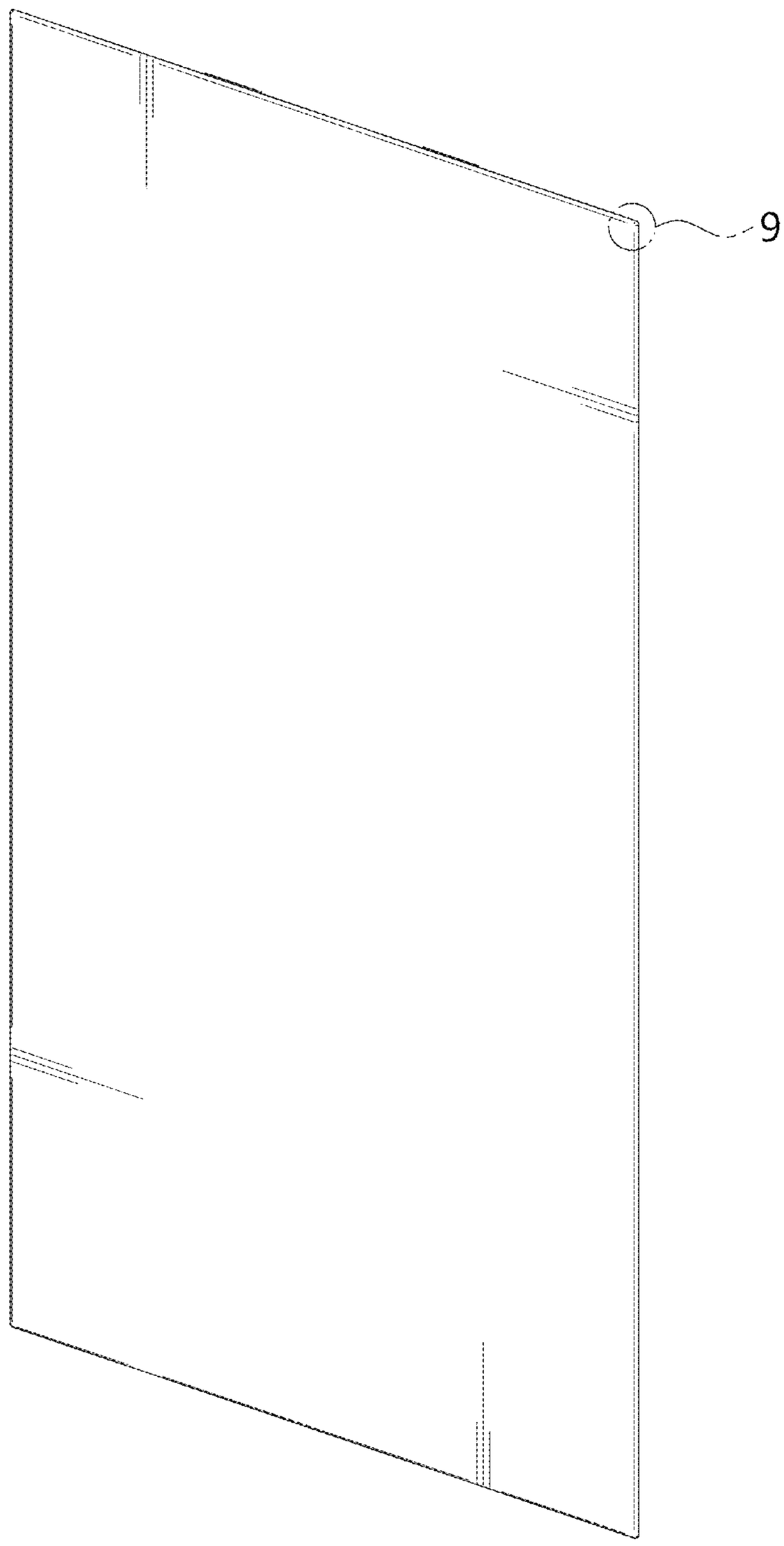

FIG. 2

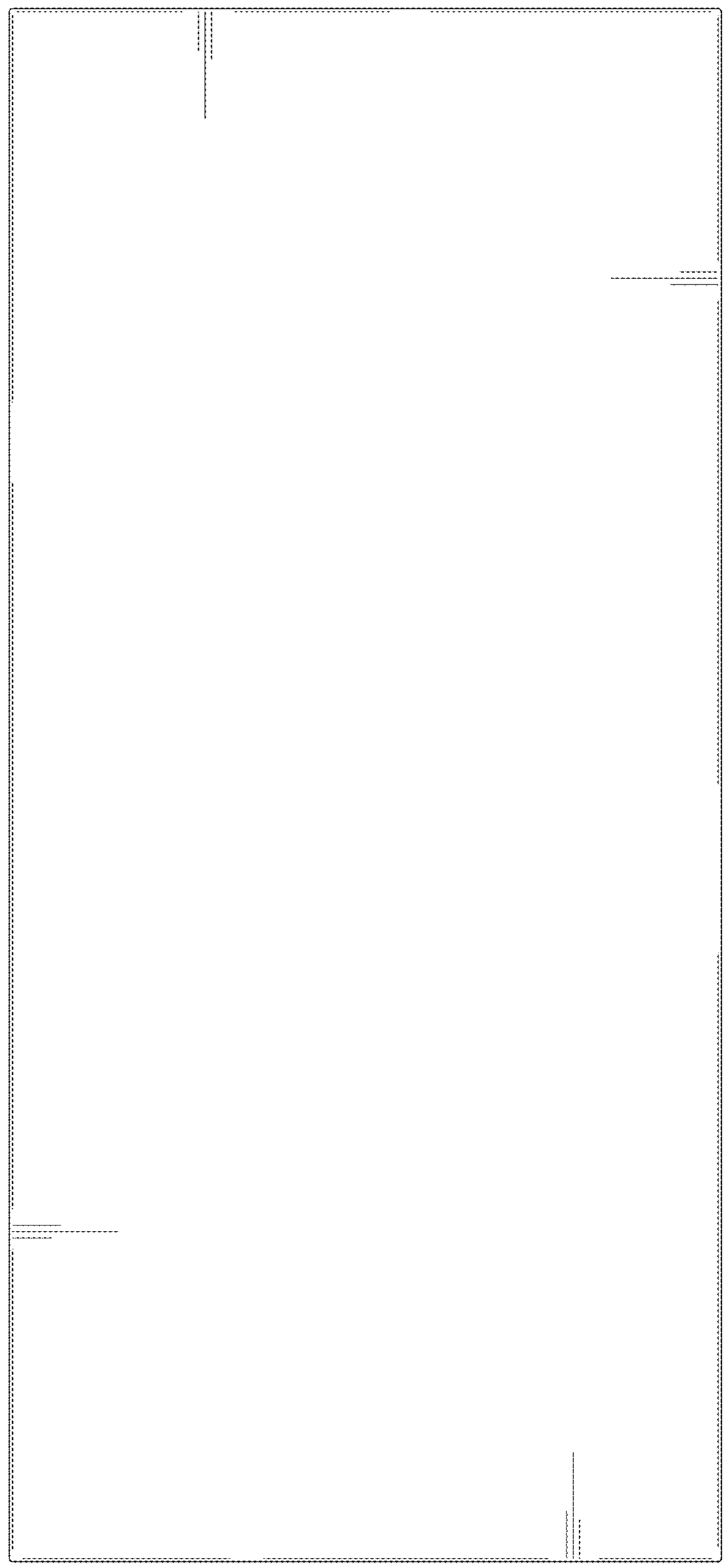

FIG. 3

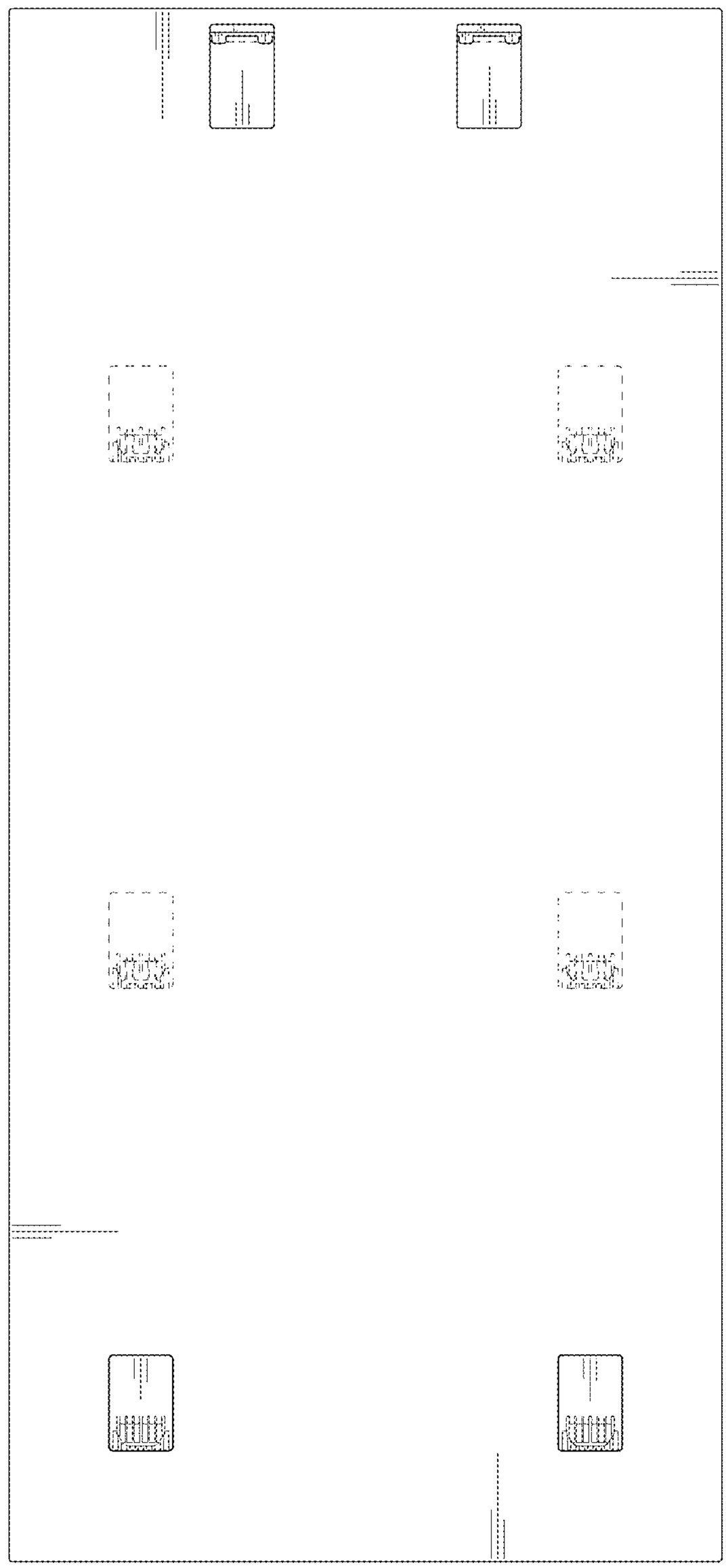

FIG. 4

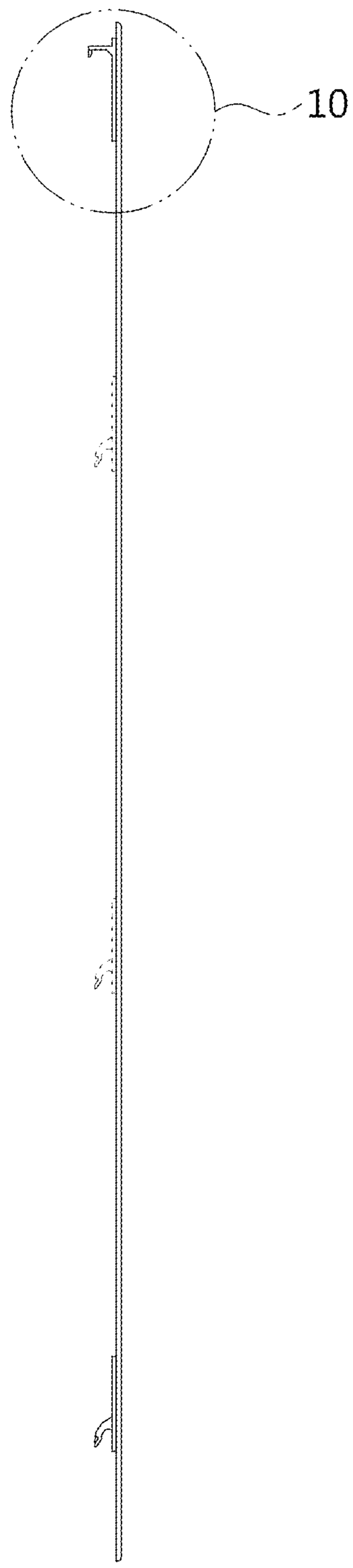

FIG. 5

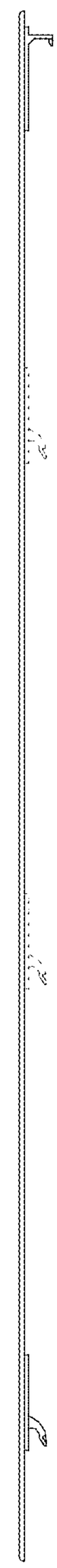

FIG. 6

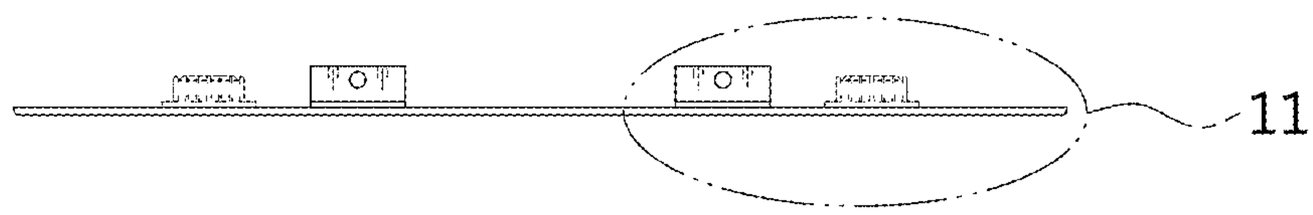

FIG. 7

FIG. 8

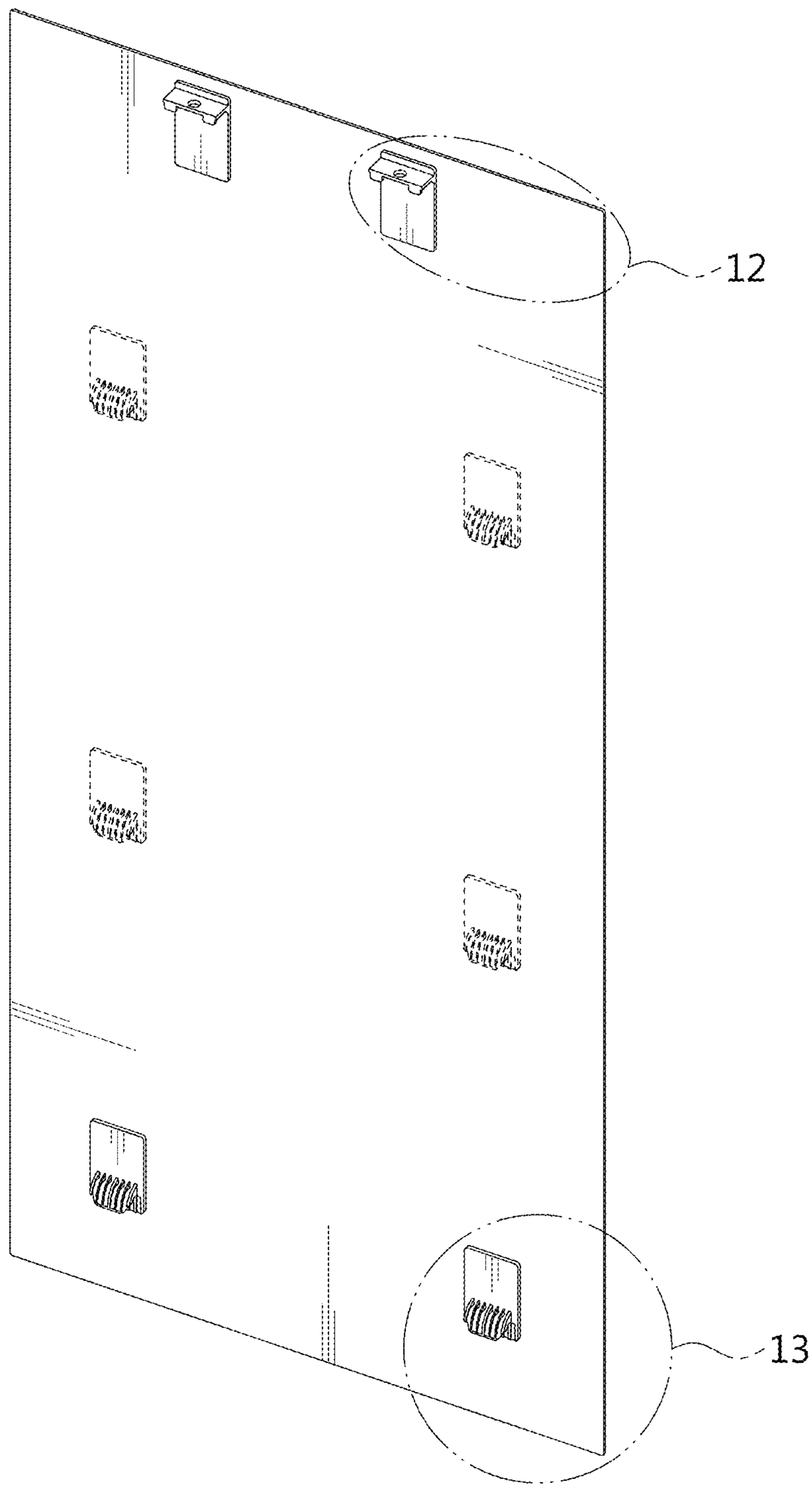

FIG. 9

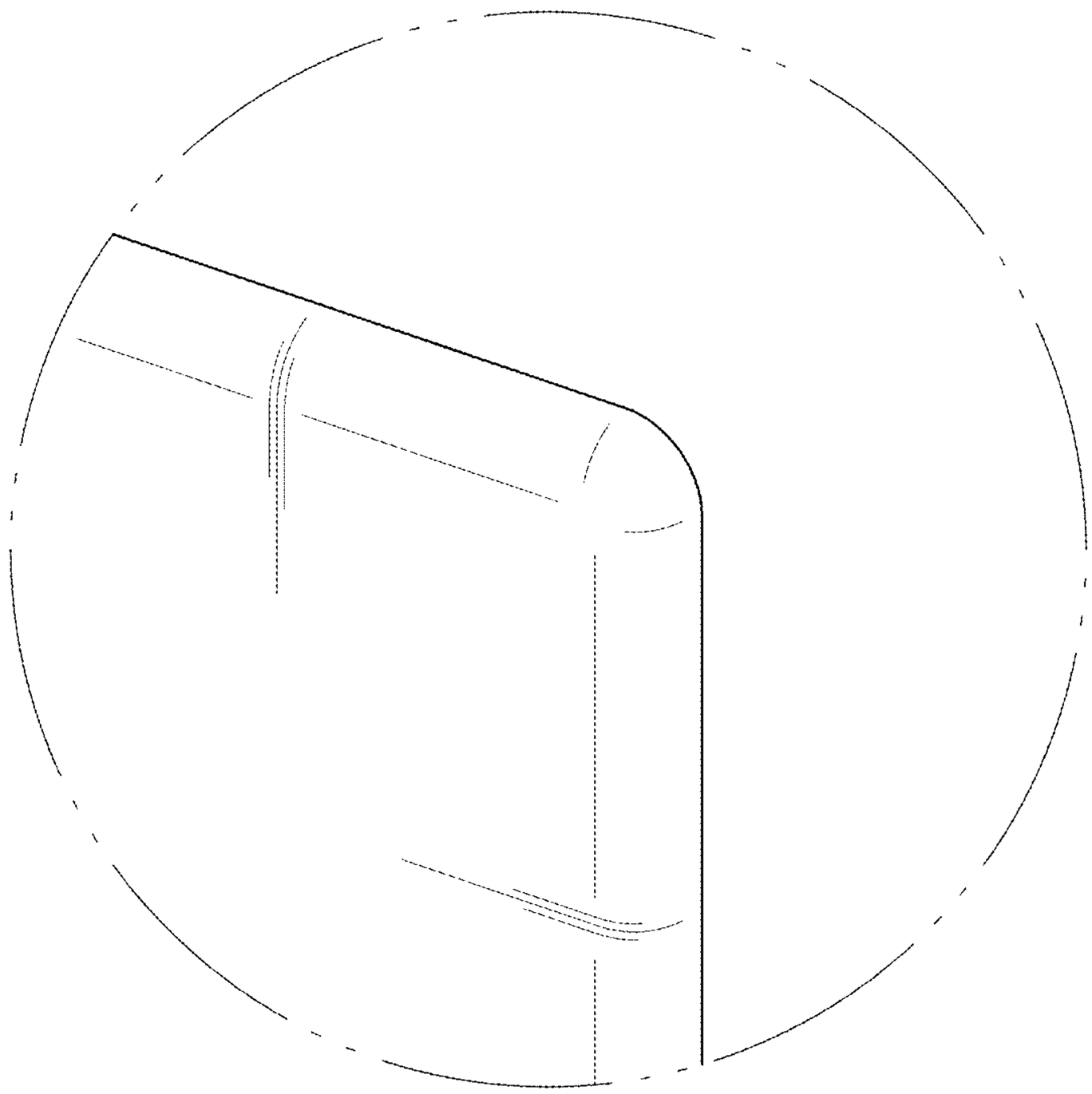

FIG. 10

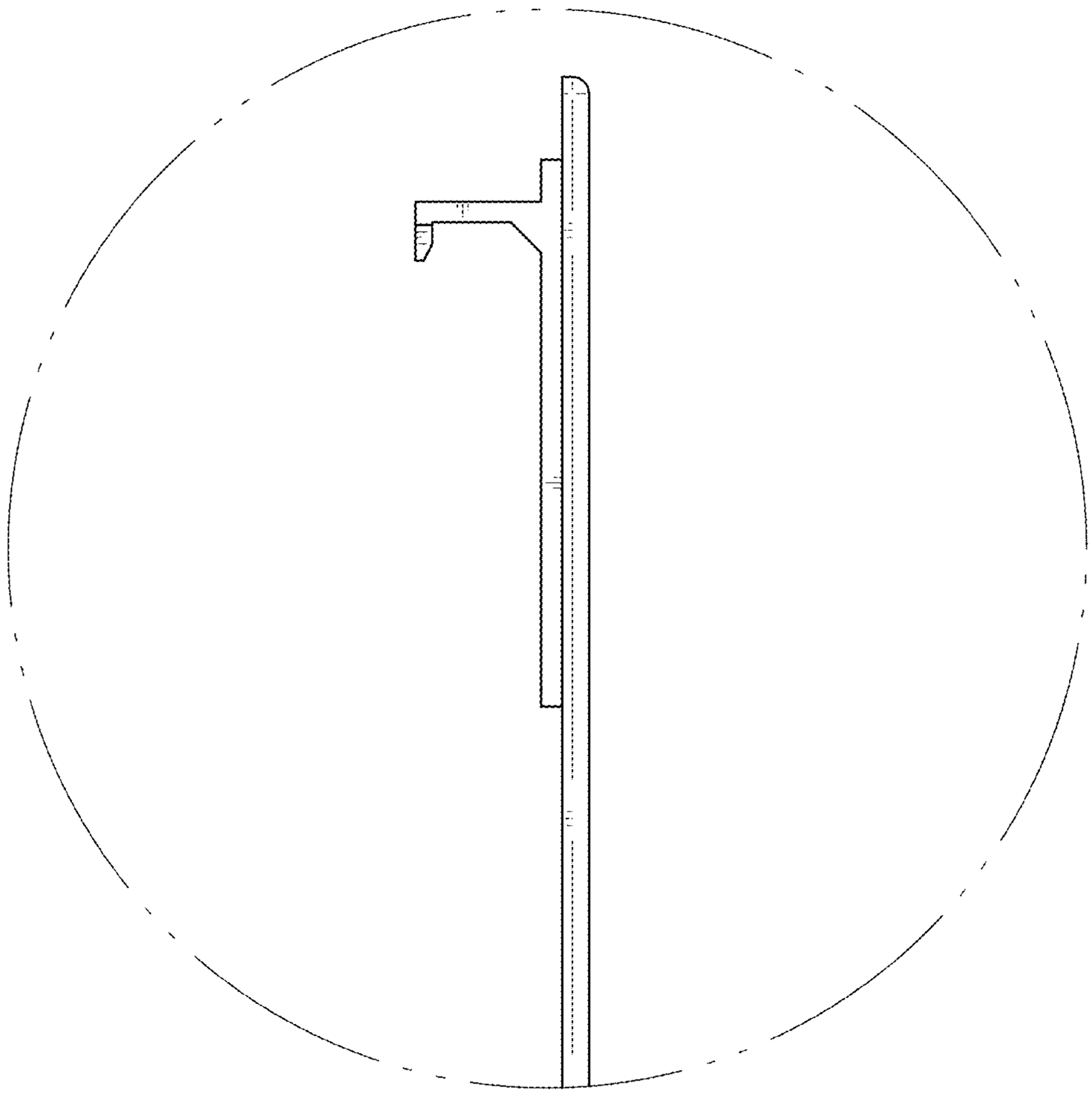

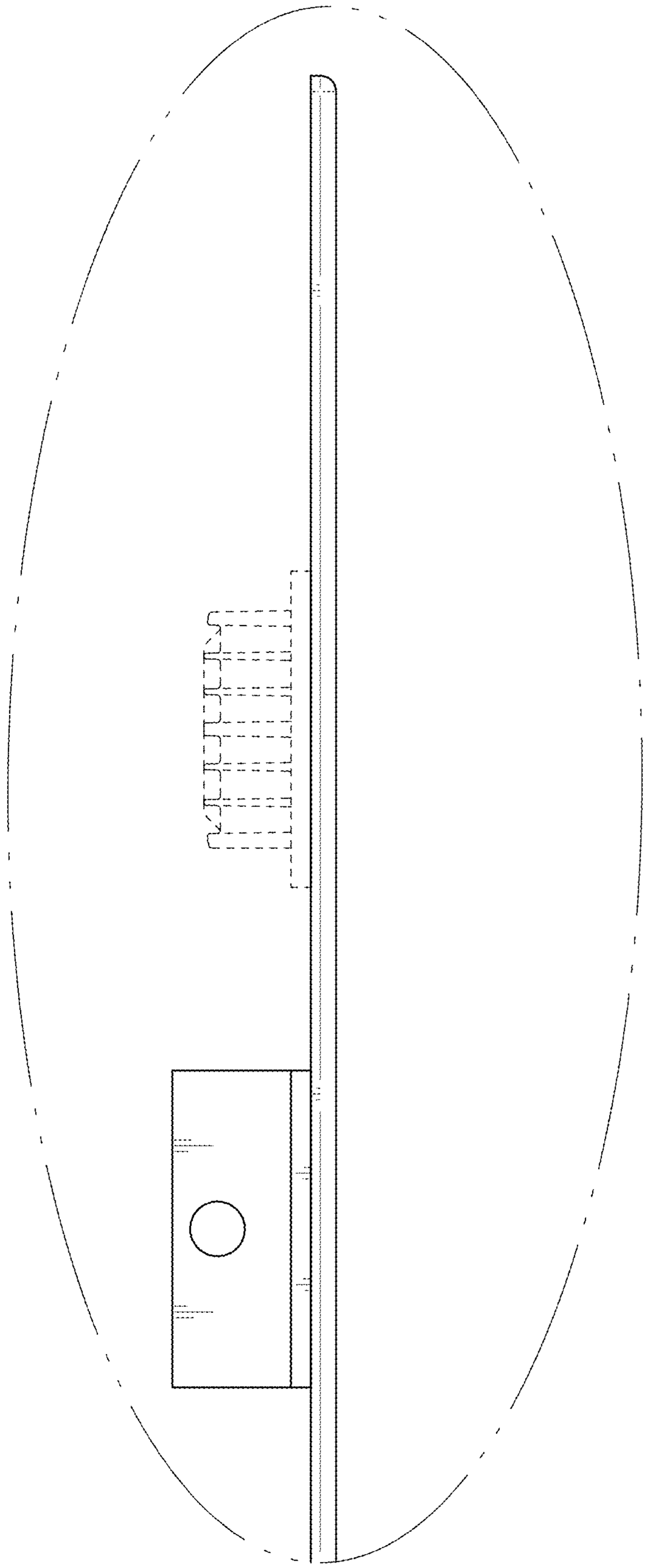

FIG. 11

FIG. 12

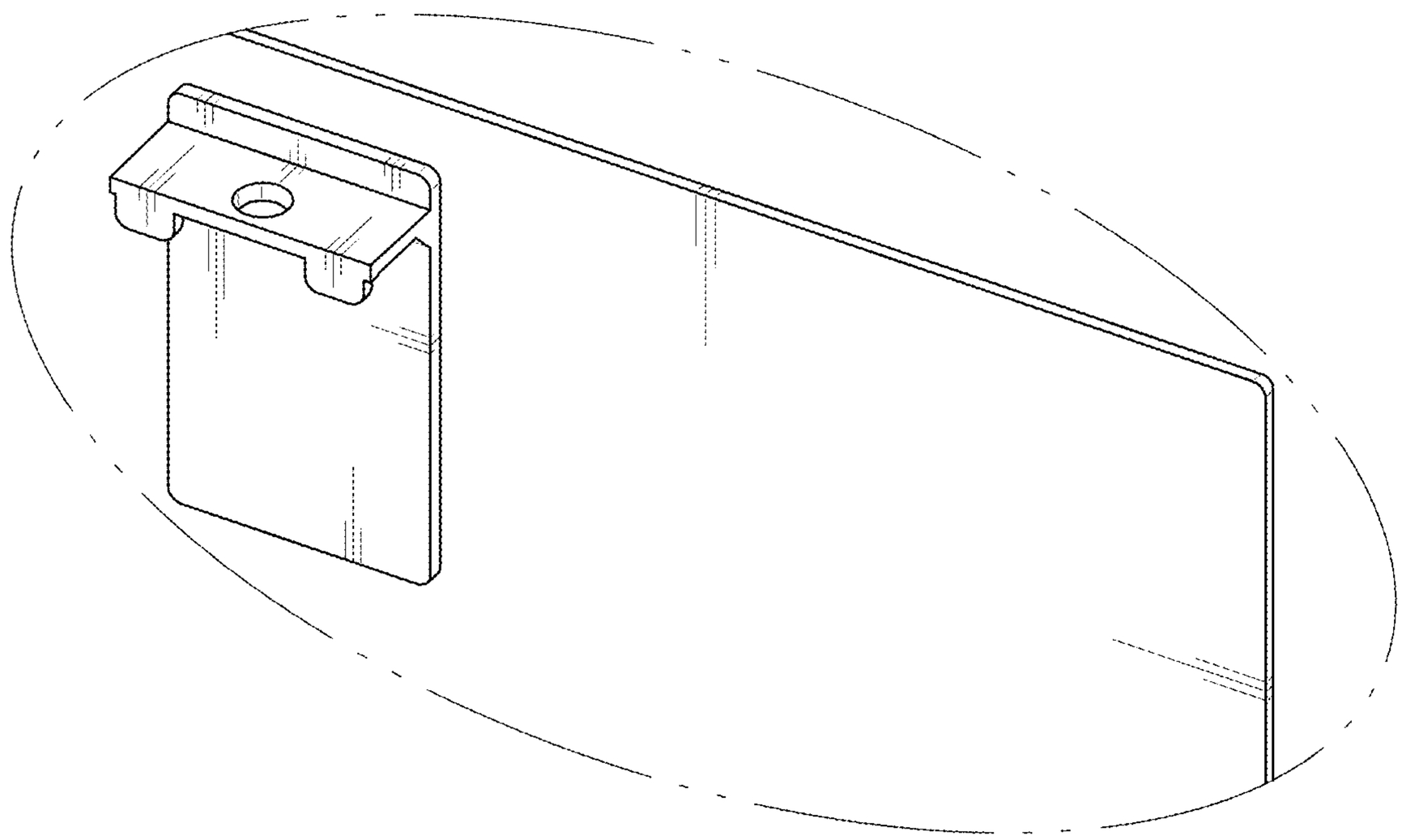

FIG. 13

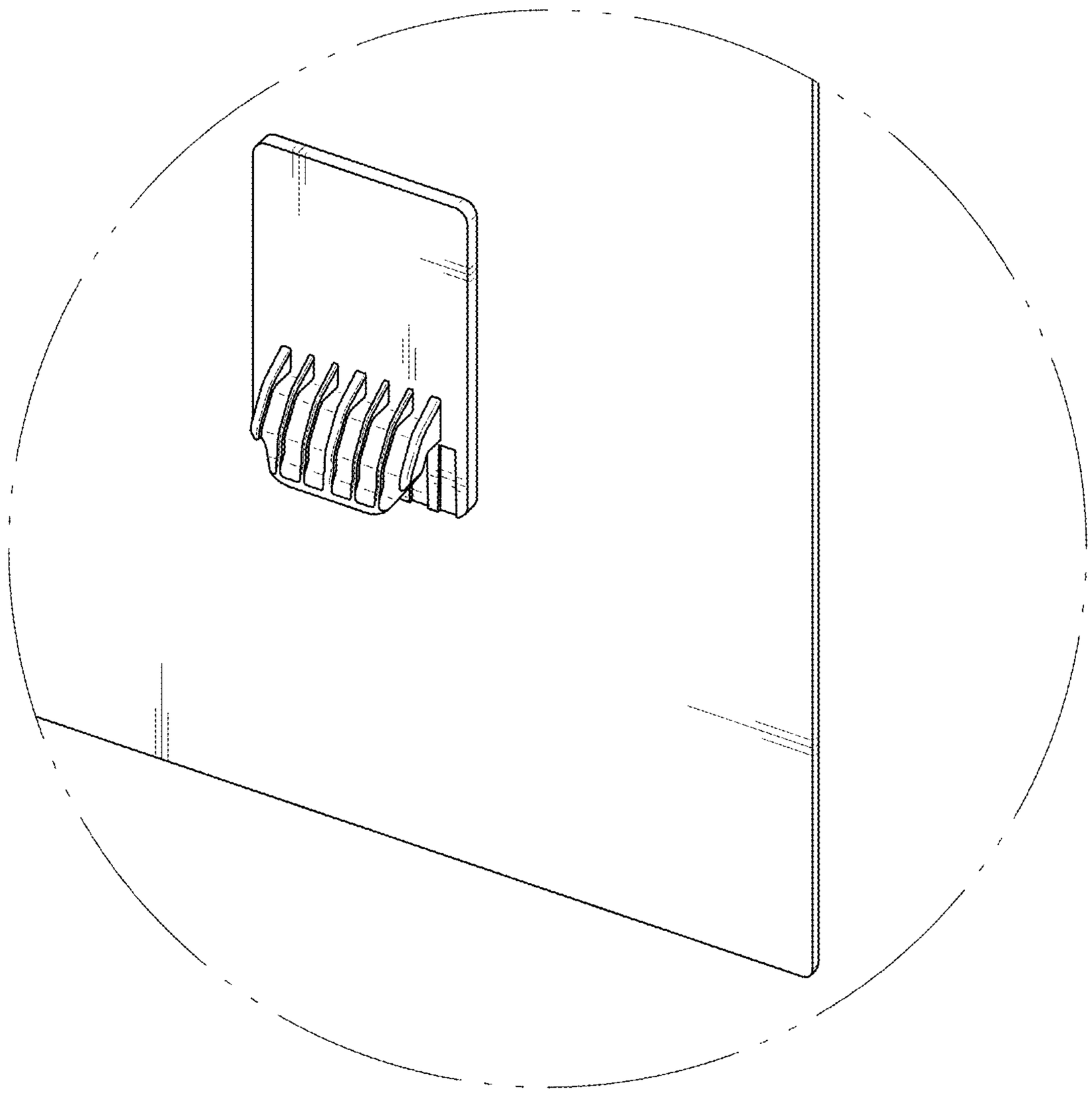
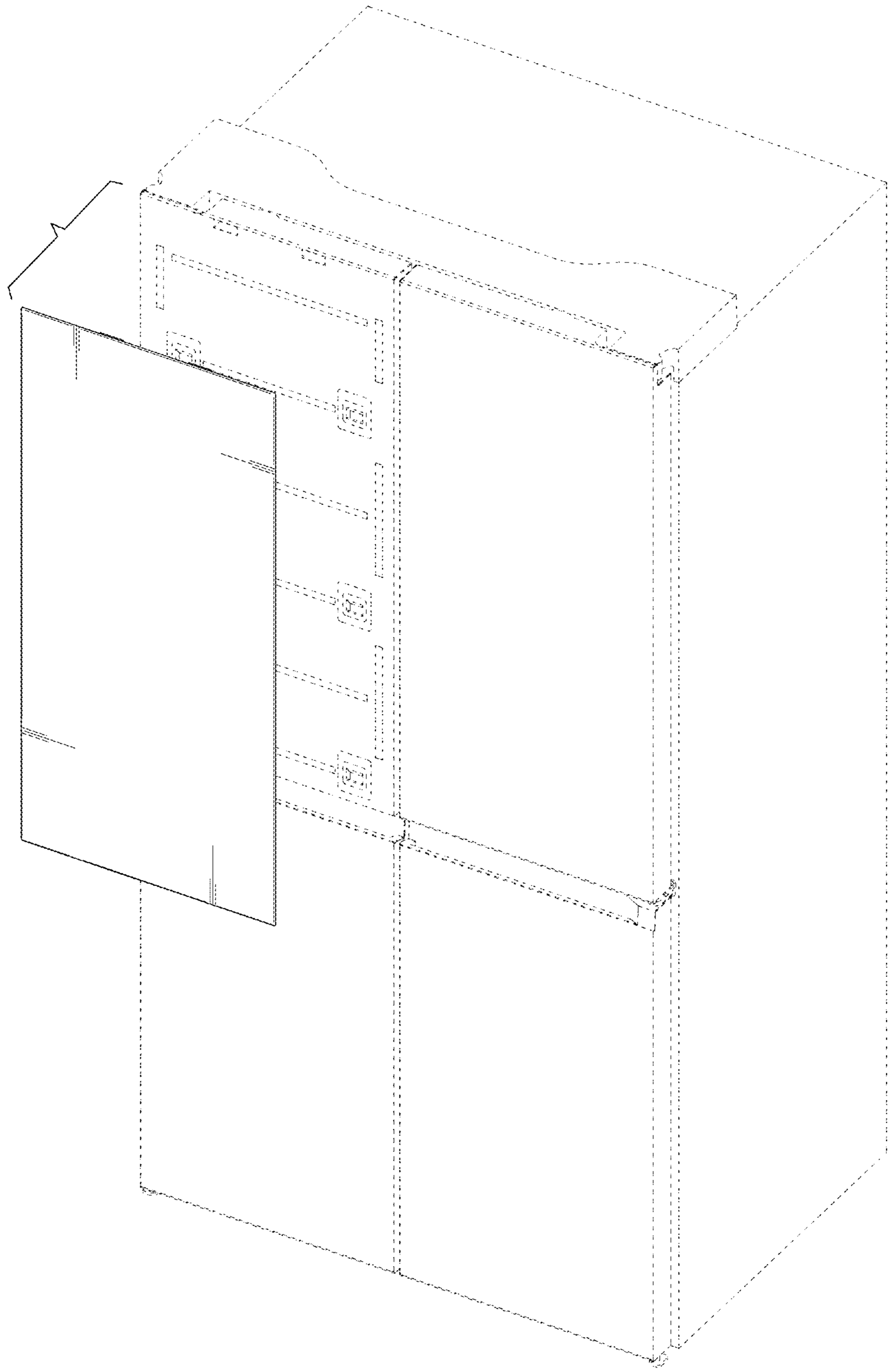
FIG. 14