US00D952689S

# (12) United States Design Patent
Deulofeu

(10) Patent No.: US D952,689 S
(45) Date of Patent: ** May 24, 2022

(54) **SAND SUCTION DEVICE**

(71) Applicant: **Diego Soria Deulofeu**, Cordova (AR)

(72) Inventor: **Diego Soria Deulofeu**, Cordova (AR)

(**) Term: **15 Years**

(21) Appl. No.: **29/698,976**

(22) Filed: **Jul. 22, 2019**

(51) **LOC (13) Cl.** ..... **15-02**

(52) **U.S. Cl.**
USPC ..... **D15/7**

(58) **Field of Classification Search**
USPC ..... D15/7, 9.1; D23/231
CPC ..... F04B 9/14; F04B 47/024; F04B 33/00; F04B 33/005; F16K 11/0712; B67D 7/00; B67D 7/007; B67D 7/04; B67D 7/60
See application file for complete search history.

(56) **References Cited**

U.S. PATENT DOCUMENTS


| | | | | | |
|---|---|---|---|---|---|
| 1,217,886 | A | * | 2/1917 | Hopkins | A61H 9/005 601/8 |
| 1,916,342 | A | * | 7/1933 | Sullivan | F04B 33/005 92/161 |
| D150,097 | S | * | 6/1948 | Russell | D23/231 |
| 2,883,939 | A | * | 4/1959 | Russell | F04B 9/14 417/555.1 |
| 3,786,730 | A | * | 1/1974 | Linderholm | F04B 33/005 92/169.1 |
| D255,826 | S | * | 7/1980 | Stout | D23/231 |
| D287,531 | S | * | 12/1986 | Evans | D23/231 |
| D314,039 | S | * | 1/1991 | Manchester | D23/231 |
| 5,494,411 | A | * | 2/1996 | Chuang | F04B 33/00 417/234 |
| 5,620,314 | A | * | 4/1997 | Worton | F04B 9/14 417/437 |
| D386,245 | S | * | 11/1997 | Downs | D23/231 |
| 6,050,352 | A | | 4/2000 | Thompson | |
| D452,726 | S | * | 1/2002 | Tsai | D23/231 |
| RE39,468 | E | | 1/2007 | Ricker | |
| D632,306 | S | * | 2/2011 | Wang | D15/7 |
| D715,921 | S | * | 10/2014 | Wan | D24/112 |
| D725,230 | S | * | 3/2015 | Chen | D23/231 |
| D772,304 | S | | 11/2016 | Rondinella et al. | |

(Continued)

FOREIGN PATENT DOCUMENTS

| | | |
|---|---|---|
| ES | 2178907 | 1/2003 |
| WO | WO2011067432 | 6/2011 |

OTHER PUBLICATIONS

Sea Sense, Hand Bilge Pump Hose, (first available Apr. 16, 2011), Amazon.com, URL:<https://www.amazon.com/SeaSense-Hand-Bilge-Pump-36-Inch/dp/B000FZ346W/ref=sr_1_11?dchild=1&keywords=manual+suction+pump&qid=1625064281&sr=8-11> (Year: 2011).*


*Primary Examiner* — Calvin E Vansant
*Assistant Examiner* — Mark T. Philipps
(74) *Attorney, Agent, or Firm* — Malloy and Malloy PL; Jennie Malloy

(57) **CLAIM**

The ornamental design for the sand suction device, as shown and described.

**DESCRIPTION**

FIG. **1** is a perspective view illustrating my design for a sand suction device;
FIG. **2** is a left side elevation view thereof;
FIG. **3** is a rear elevation view thereof;
FIG. **4** is a top view thereof;
FIG. **5** is a front elevation view thereof;
FIG. **6** is a bottom view thereof; and,
FIG. **7** is a right side elevation view thereof.
The broken lines depict environmental subject matter only and form no part of the claim. The broken lines shown on the foot plate of the sand suction device represent portions of the article that form no part of the claimed design.

**1 Claim, 7 Drawing Sheets**

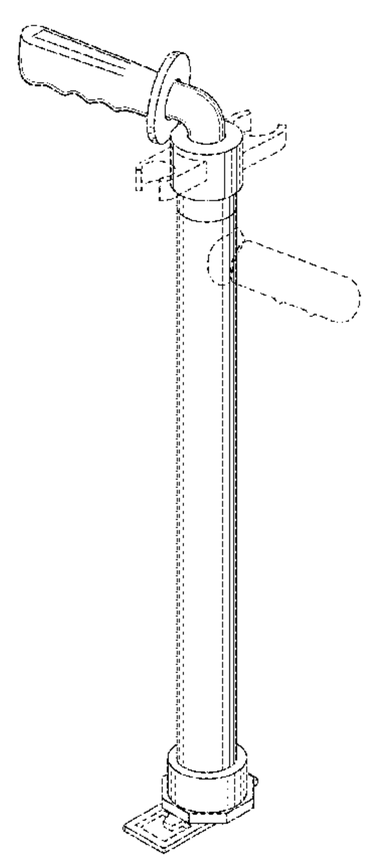

(56) **References Cited**

U.S. PATENT DOCUMENTS

| | | | | |
|---|---|---|---|---|
| 9,885,354 | B2 * | 2/2018 | Yang | B60C 23/00 |
| D834,682 | S * | 11/2018 | Liao | D23/231 |
| D864,351 | S * | 10/2019 | Yang | D23/231 |
| D885,440 | S * | 5/2020 | Chen | D15/7 |
| D902,959 | S * | 11/2020 | Liao | D15/7 |
| 2009/0090560 | A1 | 4/2009 | Hinke | |
| 2012/0267131 | A1 | 10/2012 | de Oliveira | |
| 2013/0014836 | A1 * | 1/2013 | Cain | F04B 9/14<br>137/511 |
| 2020/0223577 | A1 * | 7/2020 | Young | B65H 75/08 |

* cited by examiner

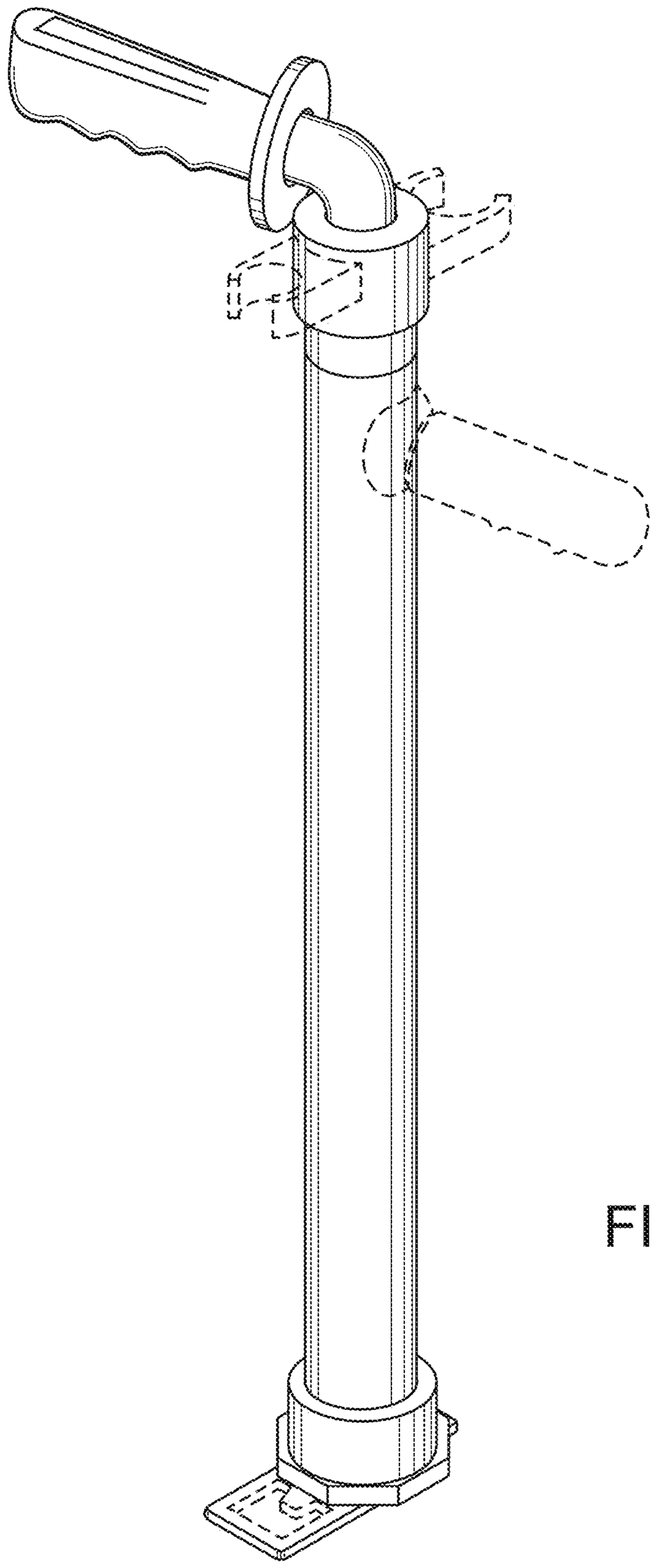

FIG. 1

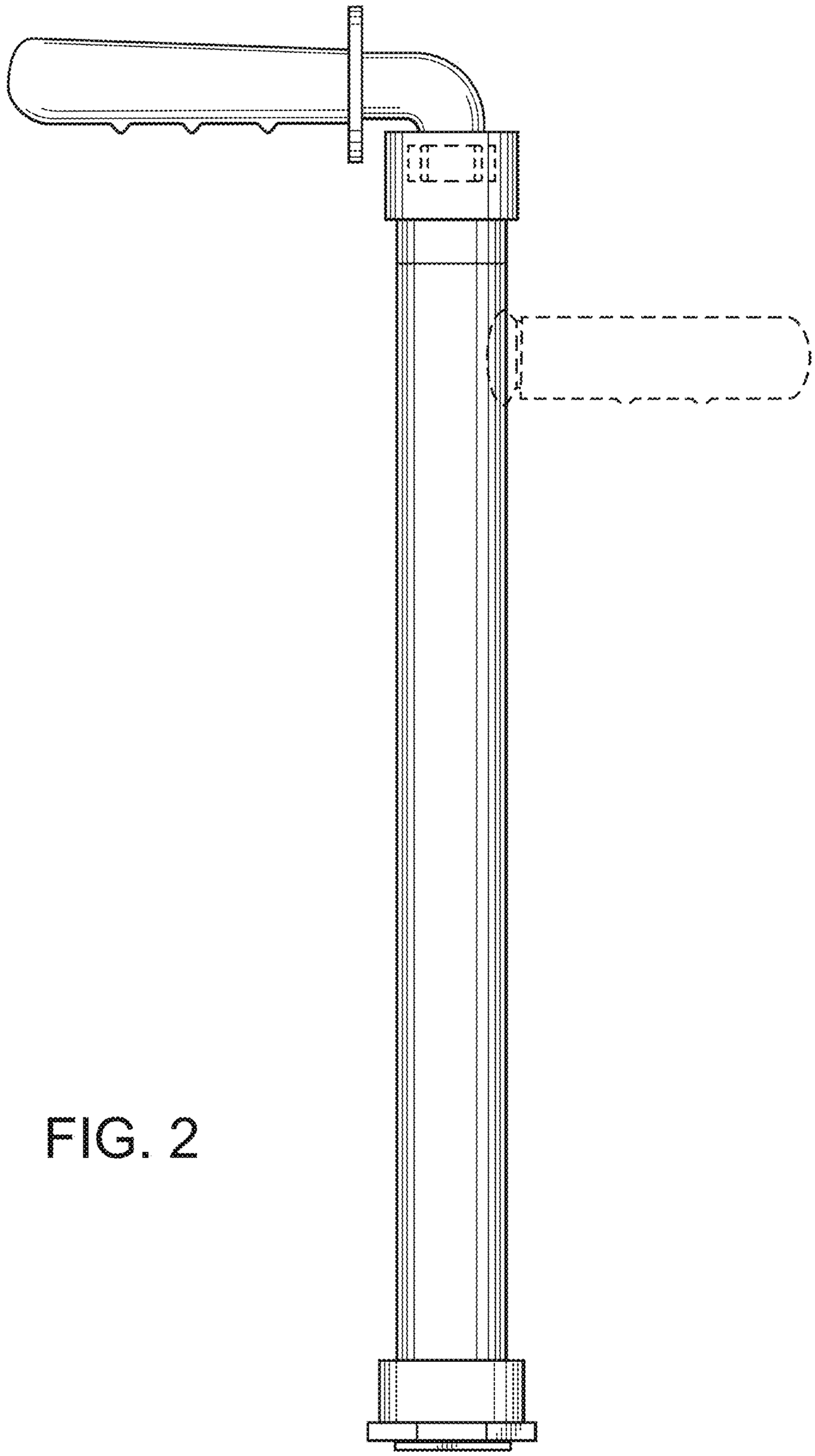

FIG. 2

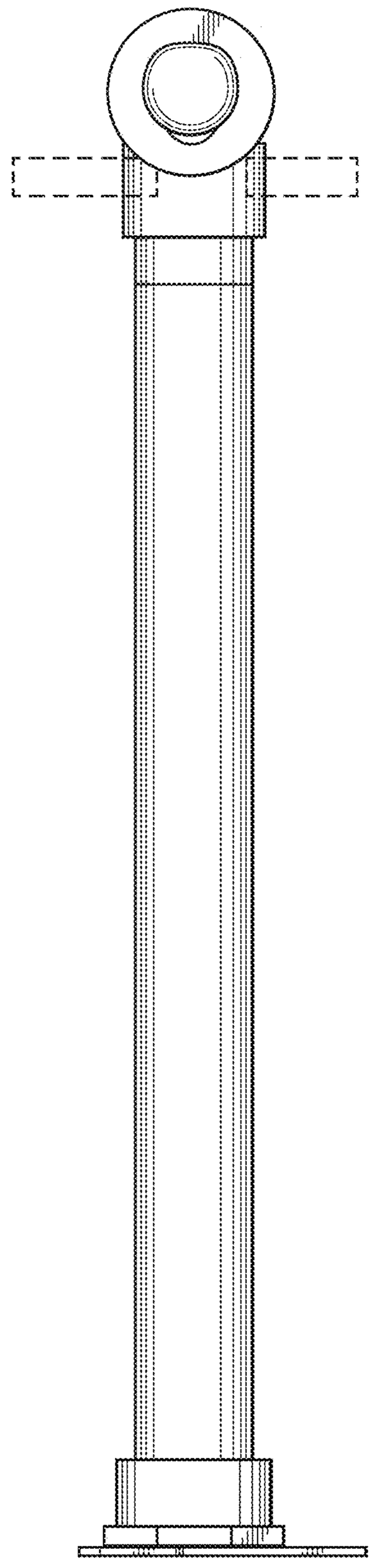

FIG. 3

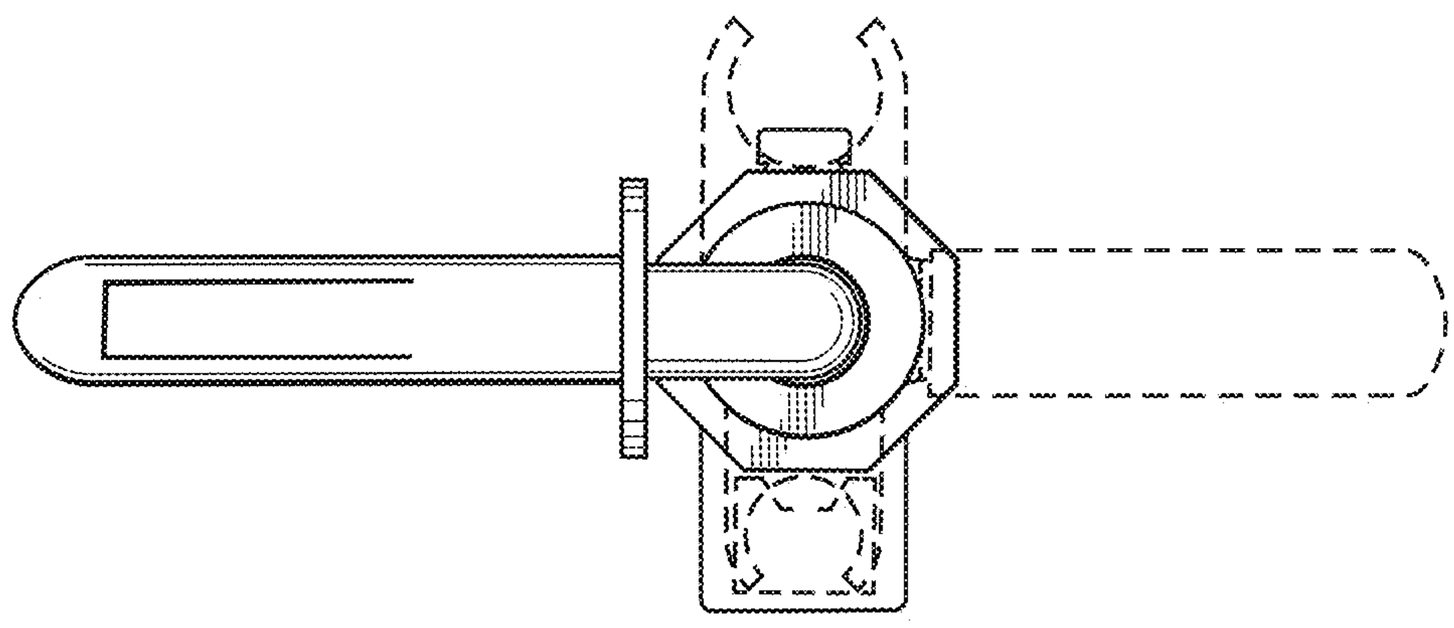

FIG. 4

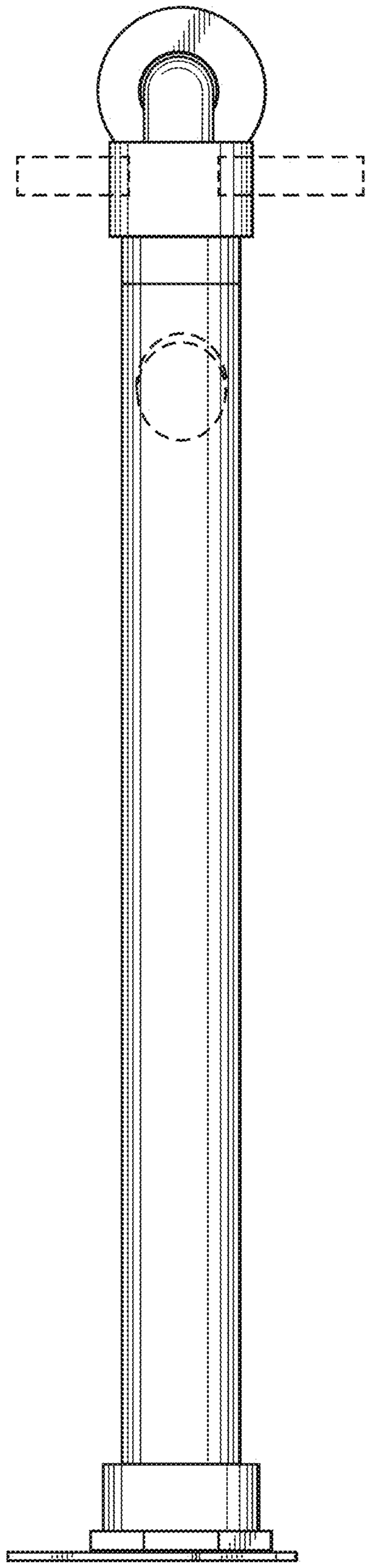

FIG. 5

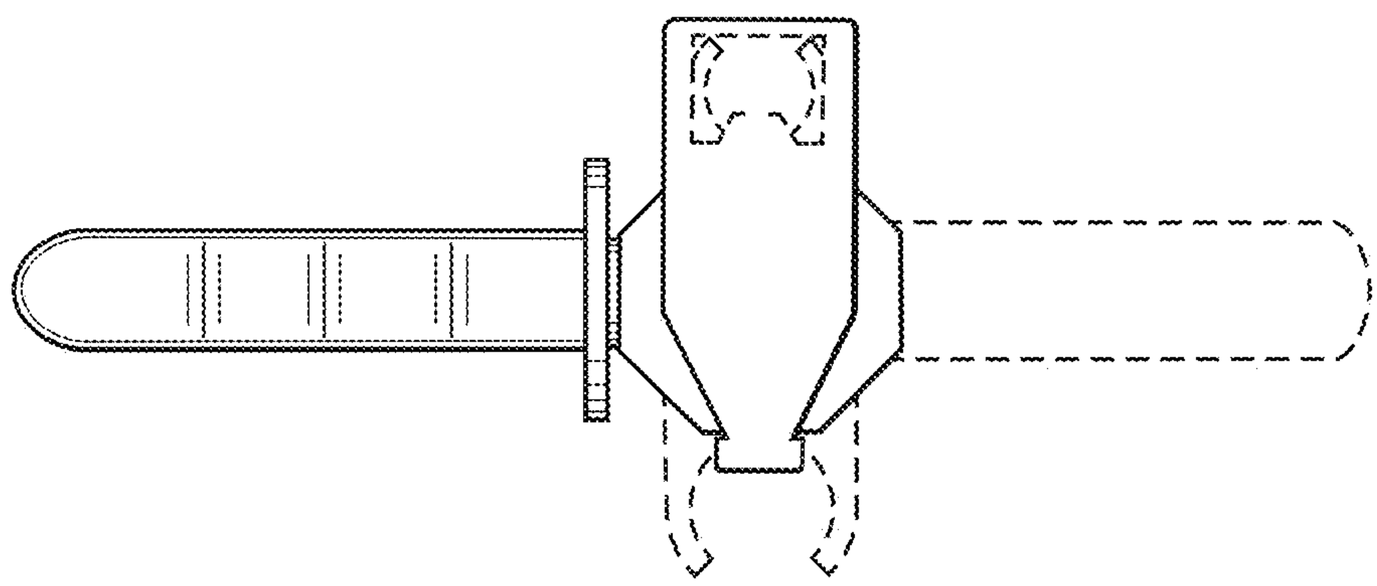

FIG. 6

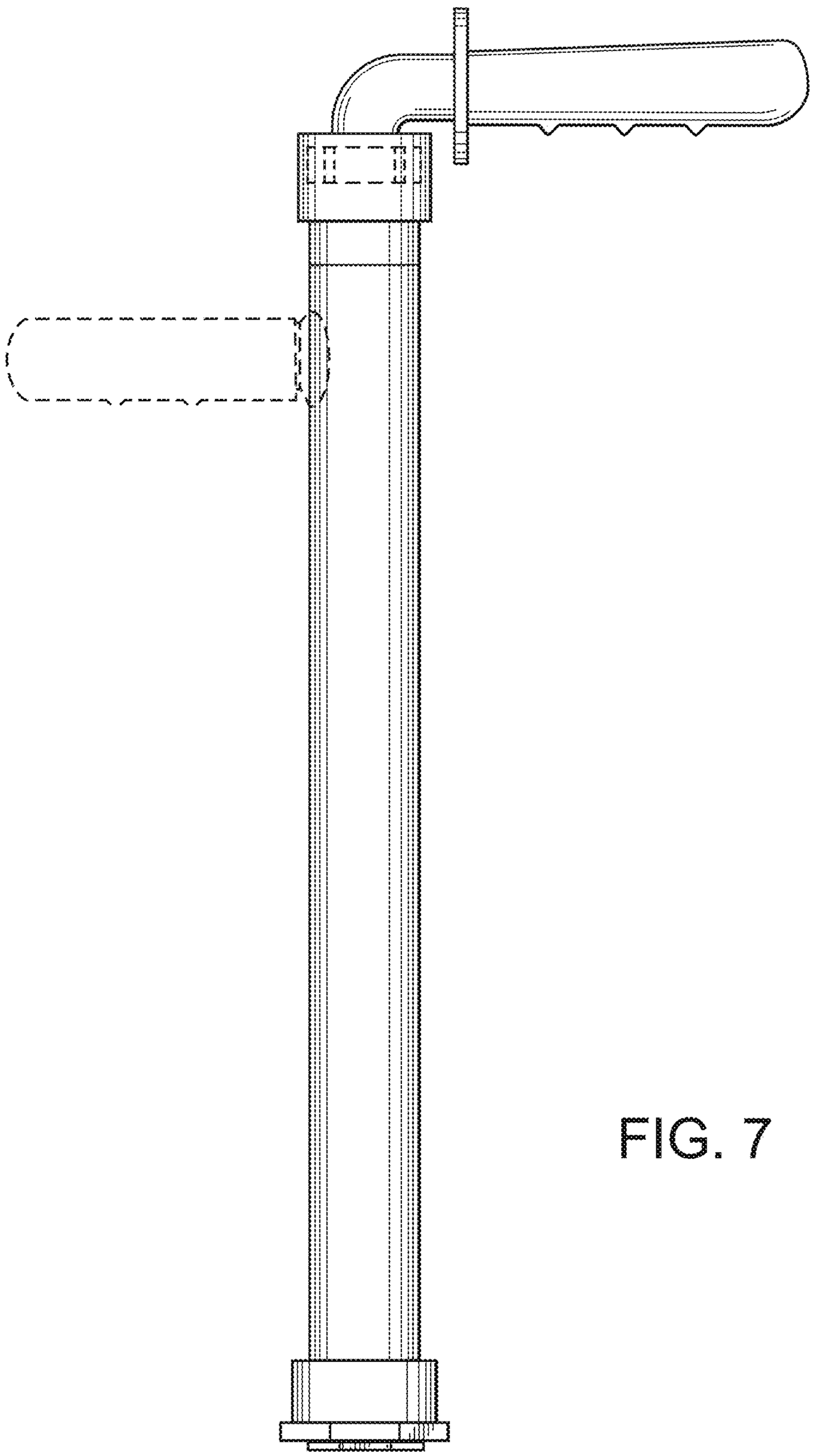

FIG. 7