US00D951149S

(12) United States Design Patent

Ewing

(10) Patent No.: US D951,149 S
(45) Date of Patent: ** May 10, 2022

(54) **MODEL VEHICLE UPPER SUSPENSION ARM**

(71) Applicant: **TRAXXAS LP**, McKinney, TX (US)

(72) Inventor: **Adam Cole Ewing**, McKinney, TX (US)

(73) Assignee: **TRAXXAS, L.P.**, McKinney, TX (US)

(**) Term: **15 Years**

(21) Appl. No.: **29/711,504**

(22) Filed: **Oct. 31, 2019**

(51) **LOC (13) Cl.** **12-16**

(52) **U.S. Cl.**
USPC **D12/159**; D21/562

(58) **Field of Classification Search**
USPC D12/159–160; D21/495, 561–562
CPC B60G 7/001; B60G 7/003; A63H 17/262
See application file for complete search history.

(56) **References Cited**

U.S. PATENT DOCUMENTS

D31,946	S	12/1899	Stanley et al.
D31,948	S	12/1899	Stanley et al.
D32,661	S	5/1900	Morgan et al.
D34,632	S	6/1901	Warner
D46,086	S	7/1914	Clark
1,135,577	A	4/1915	Hague

(Continued)

FOREIGN PATENT DOCUMENTS

CN	303934565	11/2016
CN	303934566	11/2016

(Continued)

OTHER PUBLICATIONS

"Xray XB2 Right Rear Composite Suspension Arm (Hard)," Jan. 12, 2016, amainhobbies.com, site visited Dec. 14, 2021, URL: https://www.amainhobbies.com/xray-xb2-right-rear-composite-suspension-arm-hard-xra323110-h/p-qeaztzuq7b2xactz (Year: 2016).

(Continued)

Primary Examiner — Michael A. Pratt
(74) *Attorney, Agent, or Firm* — Daryl R. Wright; Greg Carr

(57) **CLAIM**

I claim the ornamental design for a model vehicle upper suspension arm, as shown and described.

DESCRIPTION

FIG. **1** is an upper, left, front perspective view of a model vehicle upper suspension arm;
FIG. **2** is a front side elevation view thereof;
FIG. **3** is a rear side elevation view thereof;
FIG. **4** is a left side elevation view thereof;
FIG. **5** is a right side elevation view thereof;
FIG. **6** is a top plan view thereof;
FIG. **7** is a bottom plan view thereof;
FIG. **8** is a lower, right, rear perspective view thereof; and,
FIG. **9** is an upper, left, front perspective environmental use view of the model vehicle upper suspension arm.

In the drawings, the broken line showing of features of the model vehicle upper suspension arm illustrate portions of the model vehicle upper suspension arm that form no part of the claimed design; whereas, the broken line showing of the environmental use view depicts environmental subject matter and is provided for the purposes of illustrating environmental use structure and context and also forms no part of the claimed design.

In the drawings, only the first embodiment of the model vehicle upper suspension arm is shown. The second embodiment of the claimed design is a right model vehicle upper suspension arm which is a mirror image of the left model vehicle upper suspension arm disclosed in the first embodiment.

1 Claim, 7 Drawing Sheets

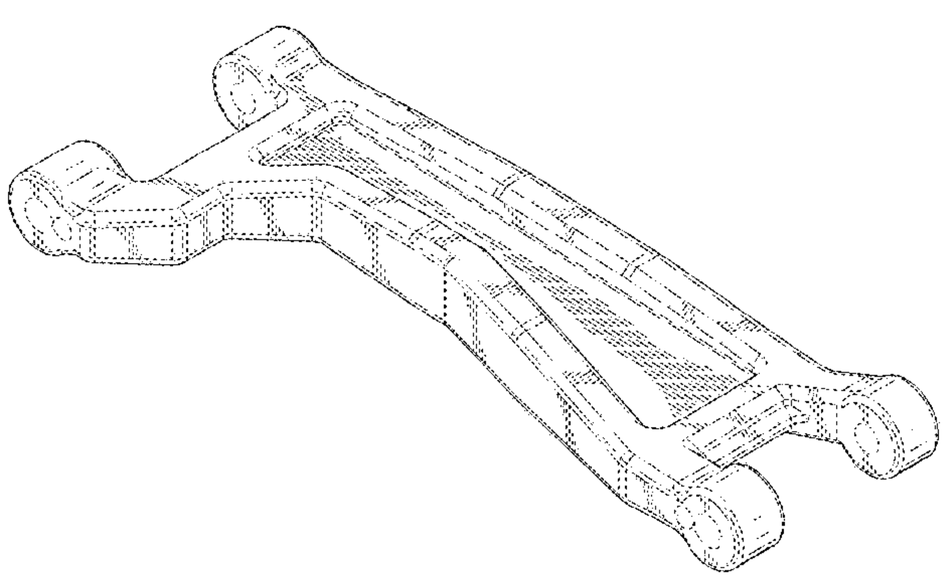

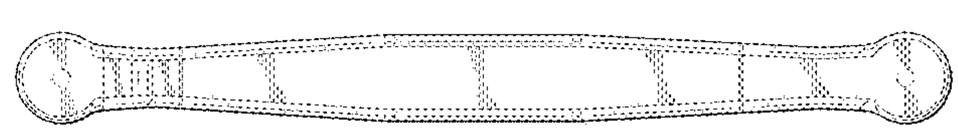

(56) **References Cited**

U.S. PATENT DOCUMENTS

1,647,438 A 11/1927 Ram
1,695,379 A 12/1928 Keck
1,998,477 A 4/1935 Wikander
2,000,255 A 5/1935 Rivard
2,111,696 A 3/1938 Sherman
2,123,681 A 7/1938 Willgoos
2,126,085 A 8/1938 Balz
2,131,661 A 9/1938 Heyermans et al.
2,148,177 A 2/1939 Sherman
2,153,083 A 4/1939 Griswold
2,186,065 A 1/1940 Fischer
2,219,361 A 10/1940 Haberstump
2,232,397 A 2/1941 Leighton
2,264,174 A 11/1941 Crump et al.
2,298,585 A 10/1942 Phelps
2,580,559 A 1/1952 Kolbe
2,624,592 A 1/1953 Macpherson
2,643,110 A 6/1953 Gregoire
2,678,803 A 5/1954 Wilkerson
2,707,100 A 4/1955 Schilberg
2,718,409 A 9/1955 Kishline et al.
2,776,147 A 1/1957 Bamford
2,852,269 A 9/1958 Gaines
2,913,253 A 11/1959 Taber
2,931,663 A 4/1960 Ferand
2,992,014 A 7/1961 Muller
3,007,728 A 11/1961 Hoffman
3,034,810 A 5/1962 Primeau
3,059,950 A 10/1962 Hedges
3,177,004 A 4/1965 Schmidt
3,231,040 A 1/1966 Blanchette
3,410,575 A 11/1968 Turnbull et al.
3,448,991 A 6/1969 Leggett
3,545,125 A 12/1970 Okuma
3,583,052 A 6/1971 Herbenar et al.
3,591,198 A 7/1971 Brando
3,632,127 A 1/1972 Grosseau
3,671,694 A 6/1972 Masuda
3,721,455 A 3/1973 Blanton
3,727,938 A 4/1973 Goodbary et al.
3,738,631 A 6/1973 Haley
3,787,073 A 1/1974 Lievore
3,938,822 A 2/1976 Guerriero
D262,959 S 2/1982 Cowan
4,470,611 A 9/1984 Duphily et al.
D277,952 S 3/1985 Nakano et al.
4,534,575 A 8/1985 Grove et al.
4,537,420 A 8/1985 Ito et al.
4,546,997 A 10/1985 Smyers
D281,772 S 12/1985 Heideman et al.
4,706,989 A 11/1987 Iijima et al.
4,786,075 A 11/1988 Takahashi
4,807,901 A 2/1989 Kondo
D304,473 S 11/1989 Poulsen
4,881,752 A 11/1989 Tanaka
4,955,634 A 9/1990 Smith
5,004,257 A 4/1991 MacIsaac
5,080,389 A 1/1992 Kawano et al.
5,108,126 A 4/1992 Banse
D335,851 S 5/1993 Lofy
D337,555 S 7/1993 McNab et al.
5,284,353 A 2/1994 Shinji et al.
5,288,101 A 2/1994 Minnett
5,332,255 A 7/1994 Velazquez
5,516,130 A 5/1996 Mitchell
5,522,281 A 6/1996 Herman
5,603,583 A 2/1997 Jackson
D385,835 S 11/1997 Webster
5,682,849 A 11/1997 Regueiro
5,692,853 A 12/1997 Litz et al.
5,774,984 A 7/1998 Kotani
5,816,357 A 10/1998 Camlin
5,839,742 A 11/1998 Holt
5,845,926 A 12/1998 Davis et al.
5,915,727 A 6/1999 Bonnville
5,934,696 A 8/1999 Bloser et al.
5,938,219 A 8/1999 Hayami et al.
5,992,863 A 11/1999 Forbes-Robinson et al.
6,076,840 A 6/2000 Kincaid et al.
6,142,268 A 11/2000 Kuo-An
D435,236 S 12/2000 Hanlon et al.
6,170,838 B1 1/2001 Laurent et al.
6,206,392 B1 3/2001 Siecinski et al.
6,478,655 B2 11/2002 Wu
6,550,796 B2 4/2003 Behr
D475,001 S 5/2003 Roll
6,595,714 B2 7/2003 Moore
6,641,457 B1 11/2003 Lai
6,655,118 B1 12/2003 Thompson et al.
6,668,779 B2 12/2003 Hendriksma et al.
6,685,203 B1 2/2004 Bodin et al.
6,698,963 B1 3/2004 Parker et al.
6,702,307 B2 3/2004 Becker et al.
6,719,313 B2 4/2004 Zadok
6,752,411 B2 6/2004 Few
6,761,372 B2 7/2004 Bryant
6,767,021 B2 7/2004 Schnurpel
6,881,122 B2 4/2005 Bloch et al.
6,929,273 B2 8/2005 Dobson et al.
6,932,366 B2 8/2005 Jones et al.
6,945,843 B1 9/2005 Motosko
6,968,931 B2 11/2005 Huisman
7,152,866 B2 12/2006 Chalin et al.
7,185,902 B1 3/2007 Lloyd
7,367,573 B2 5/2008 Kudo et al.
D622,642 S 8/2010 Noble et al.
7,883,099 B2 2/2011 Byers et al.
7,887,074 B2 2/2011 Byers et al.
8,549,752 B1 10/2013 Byers
D785,513 S 5/2017 Park et al.
D788,653 S 6/2017 Smith
D827,054 S * 8/2018 Ewing D21/561
D828,460 S 9/2018 Wood
D839,363 S 1/2019 Ewing et al.
10,266,025 B2 4/2019 Lorenz et al.
D852,095 S 6/2019 Walter
D853,938 S 7/2019 Smith
D856,432 S 8/2019 Ewing et al.
D865,079 S 10/2019 Ewing
10,435,075 B2 10/2019 Lorenz et al.
D867,475 S * 11/2019 Ewing B60G 7/001
D12/159
D871,273 S 12/2019 Bhaskar
D875,186 S * 2/2020 Ewing B60G 7/001
D12/159
D902,089 S * 11/2020 Ewing D12/159
D902,090 S * 11/2020 Ewing D12/159
D905,798 S * 12/2020 Ewing D12/159
D905,799 S * 12/2020 Ewing D12/159
D935,532 S * 11/2021 Ewing D21/562
D944,901 * 3/2022 Ewing D21/562
2002/0041076 A1 4/2002 Becker et al.
2002/0077025 A1 6/2002 Wu
2002/0125676 A1 9/2002 Bryant
2003/0107198 A1 6/2003 VanDenberg
2003/0122336 A1 7/2003 Zadok
2003/0209217 A1 11/2003 Hendriksma et al.
2003/0227151 A1 12/2003 Schreiber et al.
2004/0004335 A1 1/2004 Rudder et al.
2004/0045518 A1 3/2004 Abe
2004/0261739 A1 12/2004 Shimizuya
2005/0040619 A1 2/2005 Melcher
2005/0156399 A1 7/2005 Chu
2005/0200096 A1 9/2005 Jose et al.
2005/0220535 A1 10/2005 Griffin
2005/0287921 A1 12/2005 Lai
2006/0006622 A1 1/2006 Gesmer et al.
2006/0246819 A1 11/2006 Byers et al.
2009/0230650 A1 9/2009 Mayen et al.
2014/0361507 A1 12/2014 Park et al.
2016/0068036 A1 3/2016 Minoda et al.
2016/0318362 A1 11/2016 Watanabe et al.
2017/0050483 A1 2/2017 Gordon et al.
2017/0050485 A1 2/2017 Eleazar

(56) **References Cited**

U.S. PATENT DOCUMENTS

2017/0080350	A1*	3/2017	Allmendinger	A63H 23/02
2017/0274932	A1	9/2017	Byrnes, Jr.	
2018/0065465	A1	3/2018	Ward et al.	
2018/0111433	A1	4/2018	Compigne et al.	
2018/0126290	A1*	5/2018	Hodge	A63H 17/262
2018/0326843	A1	11/2018	Danielson et al.	
2018/0370310	A1	12/2018	Becker et al.	
2019/0070919	A1	3/2019	Andou et al.	
2019/0143871	A1	5/2019	Weber et al.	
2019/0145465	A1	5/2019	Olason	
2019/0217894	A1	7/2019	Upah et al.	
2019/0225042	A1	7/2019	Upah et al.	
2019/0241035	A1	8/2019	Wolf-Monheim	
2019/0283516	A1	9/2019	Gordon et al.	
2019/0285131	A1	9/2019	Garrett	
2019/0315174	A1	10/2019	Kwon et al.	
2019/0367117	A1	12/2019	Fischer et al.	
2020/0324599	A1	10/2020	Frenzel et al.	

FOREIGN PATENT DOCUMENTS

CN	304279714		9/2017	
CN	304762592		8/2018	
CN	304904482		11/2018	
DE	2137757	A1	2/1973	
DE	3622552	A1	1/1988	
DE	102006060897	A1	6/2008	
DE	102007055683	A1	5/2009	
DE	202018103151	U1	6/2018	
EM	002601971-0003		1/2015	
EP	0070025	A2	1/1983	
EP	3271195	B1	5/2019	
FR	2957324	A1	9/2011	
GB	9005431038-0004		7/2018	
KR	20080042707	A	5/2008	
WO	2010066226	A1	6/2010	
WO	WO-2013079850	A1 *	6/2013	B60G 7/003
WO	D095551-009		4/2017	
WO	D095551-010		4/2017	
WO	2021046302	A1	3/2021	

OTHER PUBLICATIONS

"Traxxas X-Maxx Right Lower Suspension Arm," Jan. 15, 2016, amainhobbies.com, site visited Dec. 14, 2021, URL: https://www.amazonhobbies.com/traxxas-xmaxx-right-lower-suspension-arm-tra7730/p-qeazt2qa7czxactz (Year 2016).

"Traxxas 7730 X-Maxx Lower Suspension Arm," Mar. 24, 2016, amazon.com, site visited Dec. 14, 2021, URL: https://www.amazon.ca/Traxxas-7730-X-Maxx-Lower-Suspension/dp/B01A6YD1UU/ref=sr_1_10?keywords=traxxas+suspension+arms&qid=1639510580&sr=8-10 (Year: 2016).

Associated Electrics, "Monster GT" model truck; Associated Electrics, Inc., Costa Mesa, California, 1 photograph.

Associated Electrics, "RC10GT" model vehicle; Associated Electrics, Inc., Costa Mesa, California, 1 photograph.

Bradley, John; "The Racing Motorcycle"; 1996, pp. 246-273, 322-325; Broadland Leisure Publications, England.

Ellsworth, Tony; "Suspension Design Enhancements—The Ellsworth Dare"; Dreamride Mountain Bike Tours and Film Services, Moab, Utah, 2001.

Horizon Hobby, "Losi XXX buggy"; Horizon Hobby, Inc., Champaigne, Illinois; 1 sketch of suspension geometry.

HPI Racing, "Savage 21" model truck; Hobby Products International, Foothill Ranch, California; 1 sketch of suspension geometry.

HYPERPRO_USA; "What is Progressive Suspension?" HyperPRO_USA.com.

KYOSHO Inferno MP7.5 model car; Kyosho America, Lake Forest, California; 2 sketches of suspension geometry.

Milliken, William F. and Milliken, Douglas L.; "Race Car Vehicle Dynamics" 1995, pp. 580-583, 595-597, 628-631; SAE Publications Group, Pennsylvania USA.

Phillpotts, Peter; "Rising Rate Suspension"; Off Road Design, 2001.

Race Tech, "Profile—Chalmers Formula SAE Car" Race Tech magazine, Oct./Nov. 2003, p. 74; Racecar Graphic Ltd, London, England.

Racecar Engineering, Jun. 2003—vol. 13 No. 06, pp. 15, 106; Country & Leisure Media Ltd./IPC Media Ltd., Croydon, England.

Salven, Michael; "Progressive Suspension" Nov. 10, 2000; myTSN—Publication, Netherlands.

Serpent, Veteq; Serpent Model Racing Cars, Noord-Holland, Netherlands; 3 pictures.

Serpent, Veteq; Serpent Model Racing Cars, Noord-Holland, Netherlands; 1 sletch of suspension geometry.

Staniforth, Allan; "Competition Car Suspension" 1988, pp. 76-81, 84-85; Haynes Publications, Newbury Park, California.

Tamiya, "Terra Crusher" model truck; Tamiya America, Inc., Aliso Viejo, California; 1 sketch of suspension geometry.

TRAXXAS LP; "T-MAXX Assemblies, Front Assembly" exploded view; Traxxas LP, Plano, Texas.

TRAXXAS, "Nitro Rustler" model vehicle; Traxxas LP, Plano, Texas; 1 photograph.

TRAXXAS, "T-MAXX" model vehicle; Traxxas LP, Plano, Texas; 1 photograph.

Full size vehicle with suspension linkage #1.

Full size vehicle with suspension linkage #2.

Chassis Shop, "Tube Adapters" Catalog pp. 46-51, Chassis Shop Performance Products, Mears, MI, USA.

Coleman Racing, "Hex Trailing Arm" web pages: http://www.colemanracing.com/catalog/index.php?cPath=49_1024 http://www.colemanracing.com/catalog/product_info.php?cPath=49_1024&products_id=4714 Coleman Racing, Memominee, MI, USA.

TRAXXAS, "T-Maxx Rear Assembly" exploded view drawing; Traxxas LP, Plano, TX, USA.

Aerosticks, "What Are They" web page article, Dec. 26, 2004, DPD Enterprises, Ventura, CA, USA.

Aerosticks, "Fabrication" web page article, Dec. 26, 2004, DPD Enterprises, Ventura, CA, USA.

Aerosticks, "Design Basis" web page article, Jun. 7, 2004, DPD Enterprises, Ventura, CA, USA.

Aerosticks, 2 pages photographs, DPD Enterprises, Ventura, CA, USA.

ARTINCbydb, Traxxas E-Revo Upper/Lower Arm Replacement, posted at YouTube, posting date Feb. 4, 2013. Site visited Apr. 12, 2019. URL: <https://www.youtube.com/watch?v=fGMtjrrezT0> (Year: 2013).

Traxxas 5331 Right Front Upper & Lower Arms, posted at Amazon, review posted Dec. 30, 2014. Site visited Apr. 12, 2019. URL <https://www.amazon.com/Traxxas-Right-Front-Upper-Suspenion/dp/B000BOPT0G> (Year: 2014).

Traxxas 7729 X-Maxx Upper Suspension Arms (pair), Earliest available date Jan. 5, 2016 [Online], [Site Visited Oct. 23, 2020] Available From Internet, URL: <https://www.amazon.com/Traxxas-7729-X-Maxx-Upper-Suspension/dp/B01A6Z068O> (Year: 2016).

Traxxas X-Maxx 8s F/R Left Lower Suspension Arm (1), Tin-Eye date May 26, 2017 [Online], [Site Visited Oct. 23, 2020] Available From Internet, URL: <https://www.modelsport.co.uk/traxxas-x-maxx-8s-f-r-left-lower-suspension-arm-1-/rc-car-products/396018> (Year: 2017).

Traxxas 7831G Suspension arm lower left F orR Green X-Maxx series, Earliest available date Oct. 15, 2020 [Online], [Site Visited Oct. 23, 2020] Available From Internet, URL: <https://www.ebay.com/itm/Traxxas-7831G-Suspension-arm-lower-left-F-orR-Green-X-Maxx-series-Heavy-Duty-New/402480149730?epid=20038117293&hash=item5db5afb4e2:g:lt4AAOSw9she7BMU> (Year: 2020).

Stephen Mitchell, "Awesome Part Replacement," Mar. 25, 2018 (review with photo), amazon.com, site visited Dec. 14, 2021, URL: https://www.amazon.com/dp/B01DUCYDZC/ (Year: 2018).

"Traxxas Heavy Duty Suspension Arms (Blue)," Feb. 15, 2019, amainhobbies.com, site visited Dec. 14, 2021, URL: https://www.amainhobbies.com/traxxas-heavy-duty-suspension-arms-blue-tra3655p/p-qezltakq7z2xactz (Year: 2019).

(56) **References Cited**

OTHER PUBLICATIONS

"Traxxas Suspension arms, red," Jun. 23, 2019, amazon.com, site visited Dec. 14, 2021, URL: https://www.amazon.ca/Traxxas-Suspension-Front-Weather-Material/dp/B07MXP4DTP/ref=sr_1_5?keywords=traxxas+suspension+arms&qid=1639510283&sr=8-5 (Year: 2019).
"Traxxas 7729 X-Maxx Upper Suspension Arms (pair)," Jan. 5, 2016, amazon.com, site visited Dec. 14, 2021, URL: https://www.amazon.com/Traxxas-7729-X-Maxx-Upper-Suspension/dp/B01A6Z068O/ (Year: 2016).
"Team Integy C26836SILVER Upper Suspension Arm X-Ma," Apr. 19, 2017, amainhobbies.com, site visited Dec. 14, 2021, URL: https://www.amainhobbies.com/team-integy-c26836silver-upper-suspension-arm-xma-ntc26836silver/p-quaxtarqpc2xactz (Year: 2017).

* cited by examiner

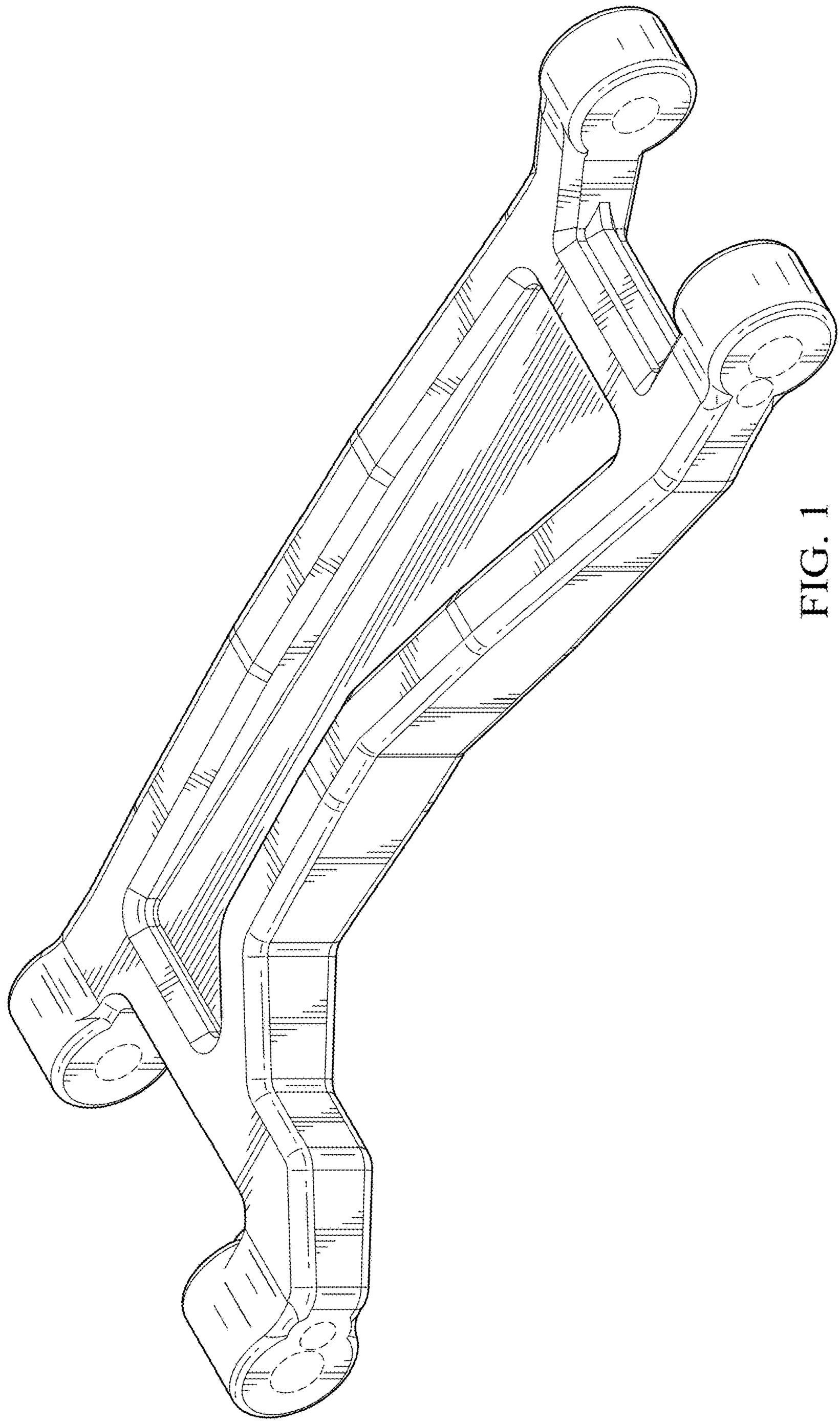

FIG. 1

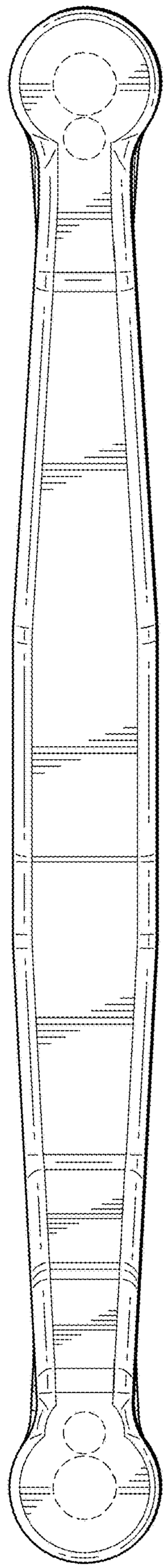

FIG. 2

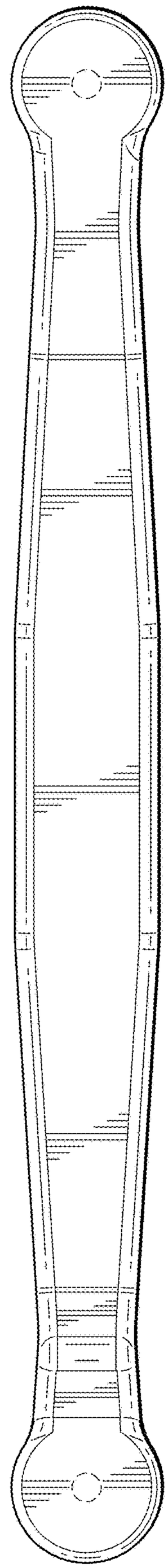

FIG. 3

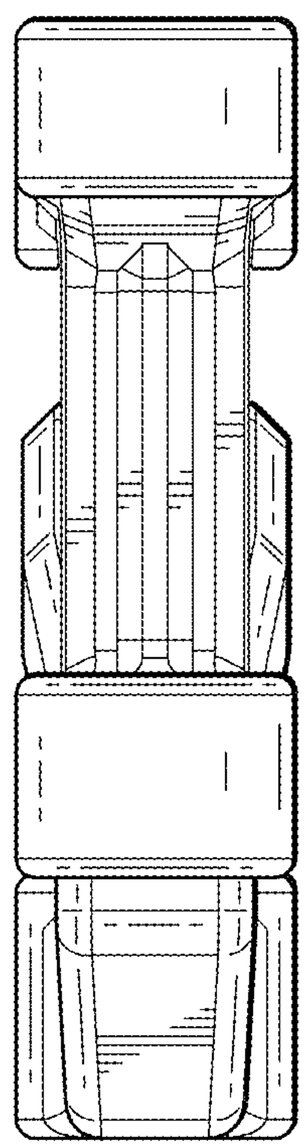

FIG. 4

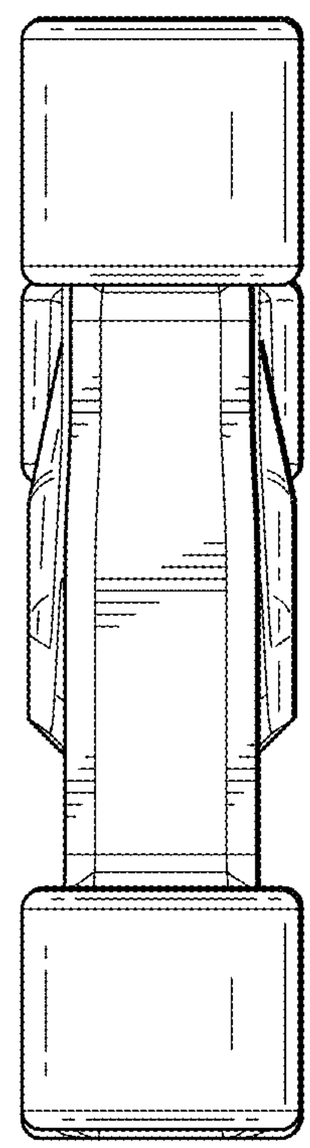

FIG. 5

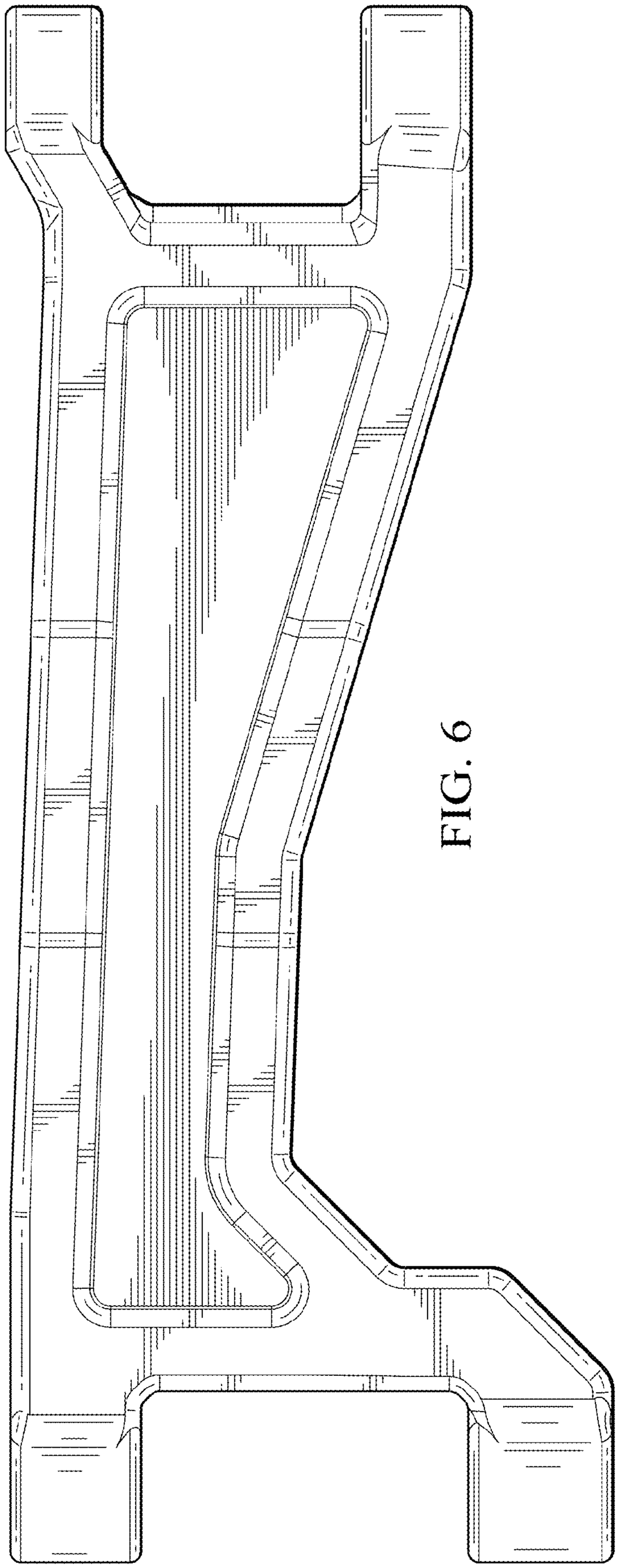

FIG. 6

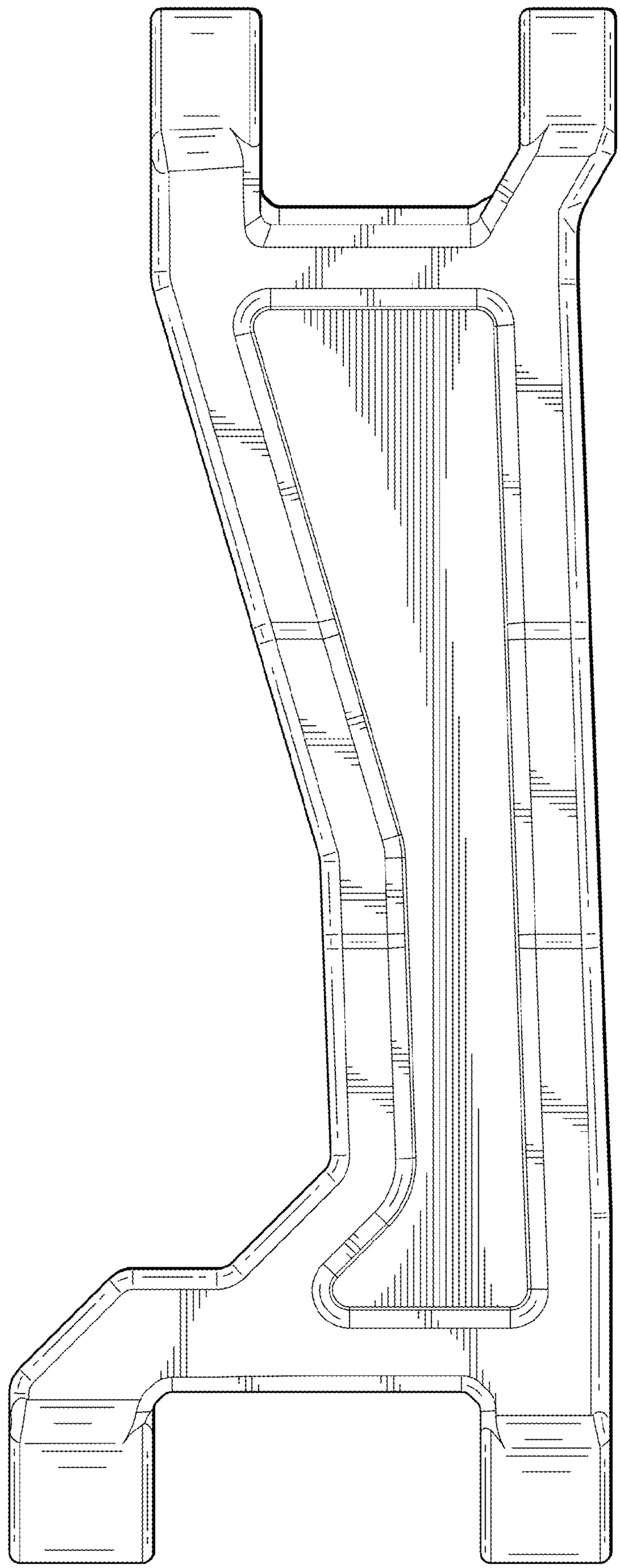

FIG. 7

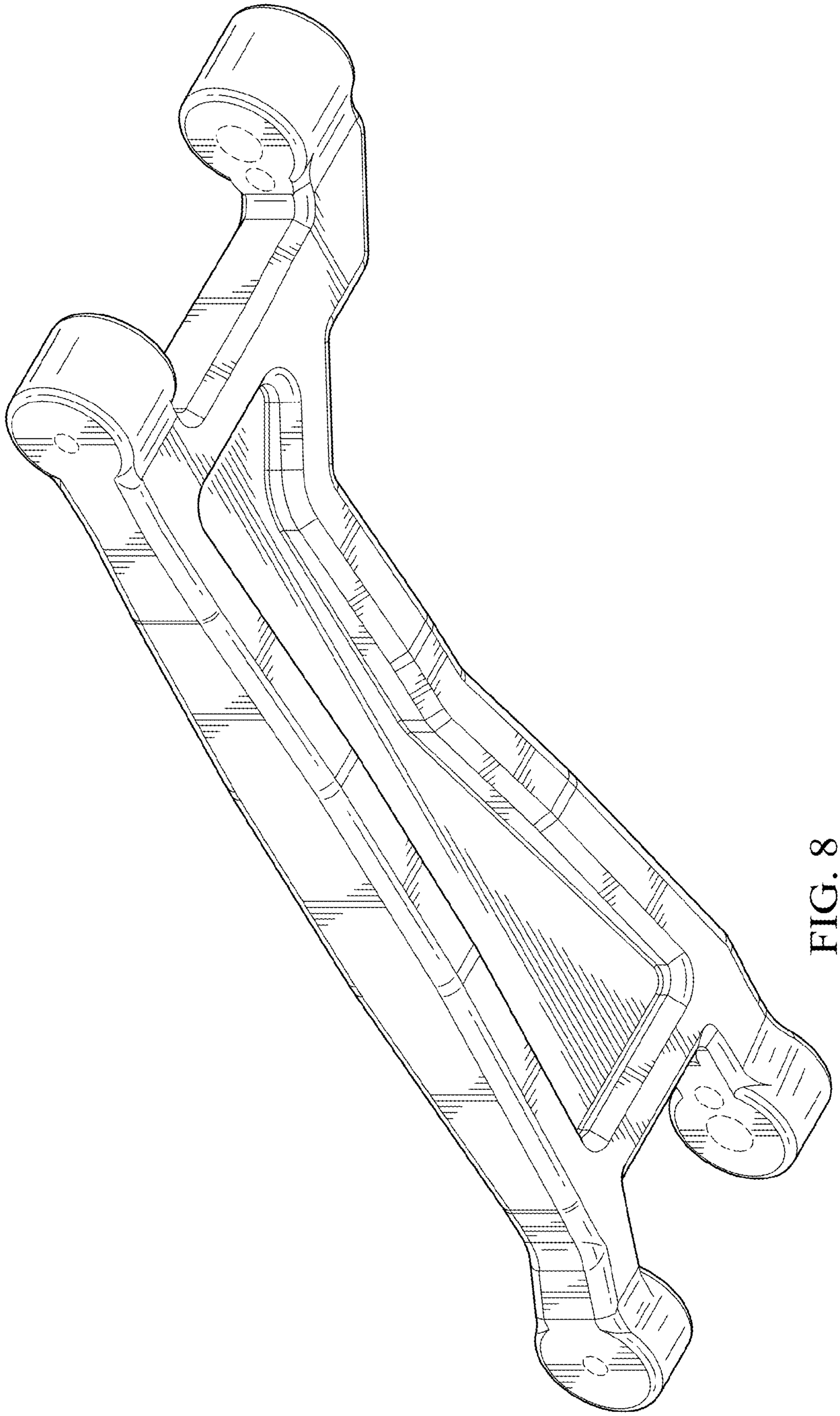

FIG. 8

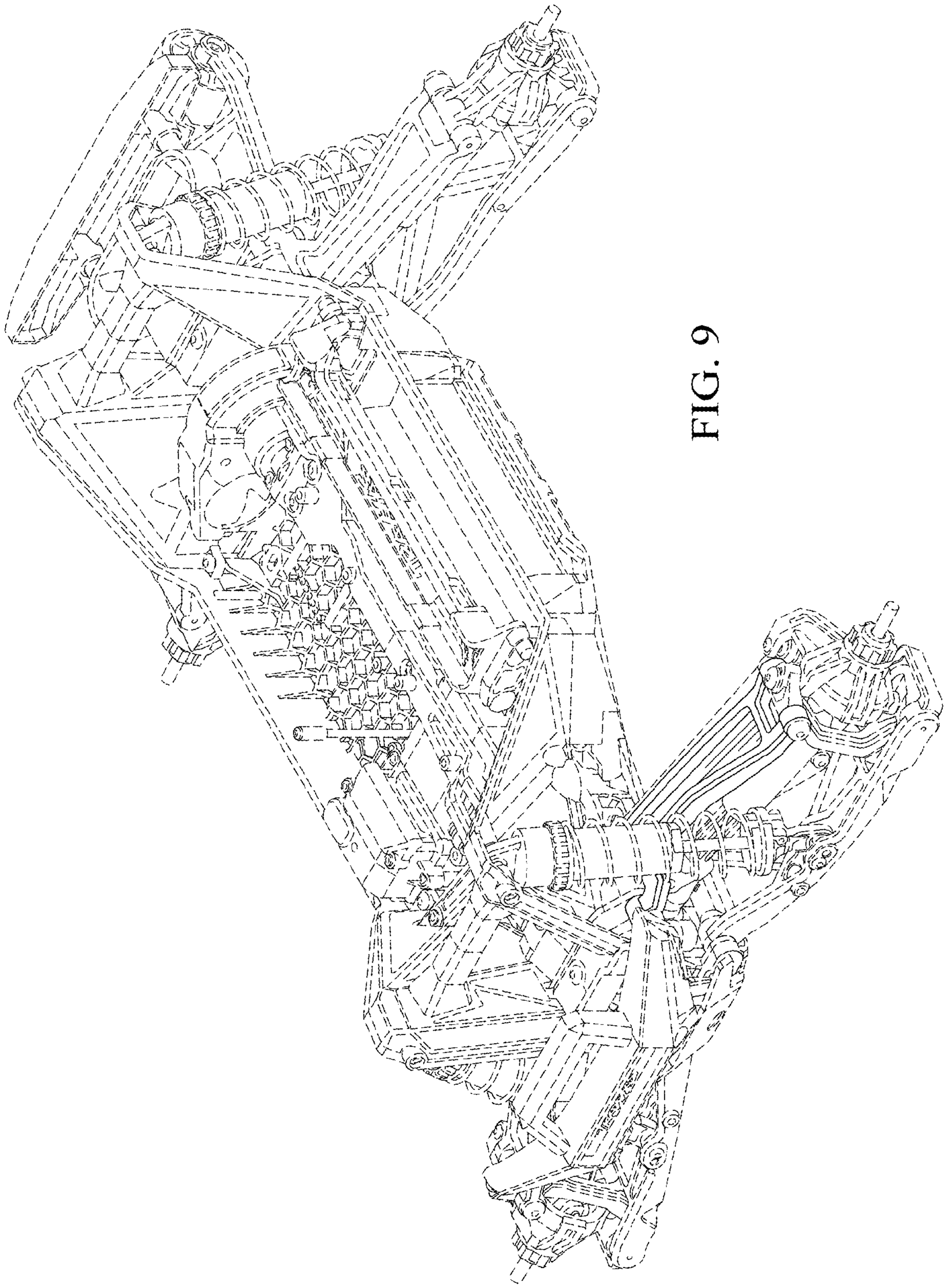

FIG. 9