US00D950863S

(12) United States Design Patent

Mott et al.

(10) Patent No.: US D950,863 S
(45) Date of Patent: ** *May 3, 2022

(54) **COLLAR CHARM**

(71) Applicant: **MARS, INCORPORATED**, McLean, VA (US)

(72) Inventors: **Robert Mott**, San Francisco, CA (US); **Xin Yang**, San Francisco, CA (US); **Adam Passey**, San Francisco, CA (US); **Shao En Huang**, San Francisco, CA (US)

(73) Assignee: **MARS, INCORPORATED**, McLean, VA (US)

(*) Notice: This patent is subject to a terminal disclaimer.

(**) Term: **15 Years**

(21) Appl. No.: **29/696,311**

(22) Filed: **Jun. 26, 2019**

(51) **LOC (13) Cl.** **30-04**

(52) **U.S. Cl.**
USPC **D30/152**

(58) **Field of Classification Search**
USPC D30/144, 145, 151, 152, 153, 154, 155, D30/199; D3/215, 218, 221, 222, 226,
(Continued)

(56) **References Cited**

U.S. PATENT DOCUMENTS

1,242,159 A 10/1917 Dunkleberger
1,271,650 A 7/1918 Arkin
(Continued)

FOREIGN PATENT DOCUMENTS

CN 102833675 A 12/2012
CN 305133577 * 4/2019
(Continued)

OTHER PUBLICATIONS

Whistle Go Explore—Ultimate Health & Location Tracker, published Jul. 23, 2019 [online][retrieved May 17, 2021], Available from Internet, URL: https://www.amazon.com/Whistle-Explore-Ultimate-Location-Tracker/dp/B07TC75S8X/ref=sr_1_1_sspa?dchild=1&keywords=whistle+dog&qid=1621017829&sr=8-1-spons&psc=1&spLa=ZW5jcnlwdGVkUXVhbGlmaWVyPUExWk9TWkkxTVZVN09LJmVuY3J5cHRIZEIkPUEwMjg5OTU5MVpRRIQ5VINKV1NBMSZIbmNyeXB0ZWRBZEIkPUEwOTQ4MjkxMjFBUkxNQjkwM0FCUiZ3aWRnZXROYW1IPXNwX2F0ZiZhY3Rpb249Y2xpY2tSZWRpcmVjdCZkb05vdExvZ0NsaWNrPXRydWU=.*
(Continued)

Primary Examiner — Kevin K Rudzinski
(74) *Attorney, Agent, or Firm* — Baker Botts L.L.P.

(57) **CLAIM**

The ornamental design for a collar charm, as shown and described.

DESCRIPTION

FIG. **1** is a front perspective view of a collar charm in accordance with the disclosed subject matter.
FIG. **2** is a front plan view of the collar charm shown in FIG. **1**.
FIG. **3** is a rear plan view of the collar charm shown in FIG. **1**.
FIG. **4** is a left side view of the collar charm shown in FIG. **1**.
FIG. **5** is a right side view of the collar charm shown in FIG. **1**.
FIG. **6** is a top view of the collar charm shown in FIG. **1**.
FIG. **7** is a bottom view of the collar charm shown in FIG. **1**; and,
FIG. **8** is a front perspective view of the collar charm shown in FIG. **1**, in an environment of use shown as coupled with a collar band and worn on a canine.
The broken line showing of a collar band and a canine in FIG. **8** is for the purpose of illustrating environmental subject matter and forms no part of the design. All other broken lines shown in the drawings depict portions of the collar charm that form no part of the claimed design.

1 Claim, 5 Drawing Sheets

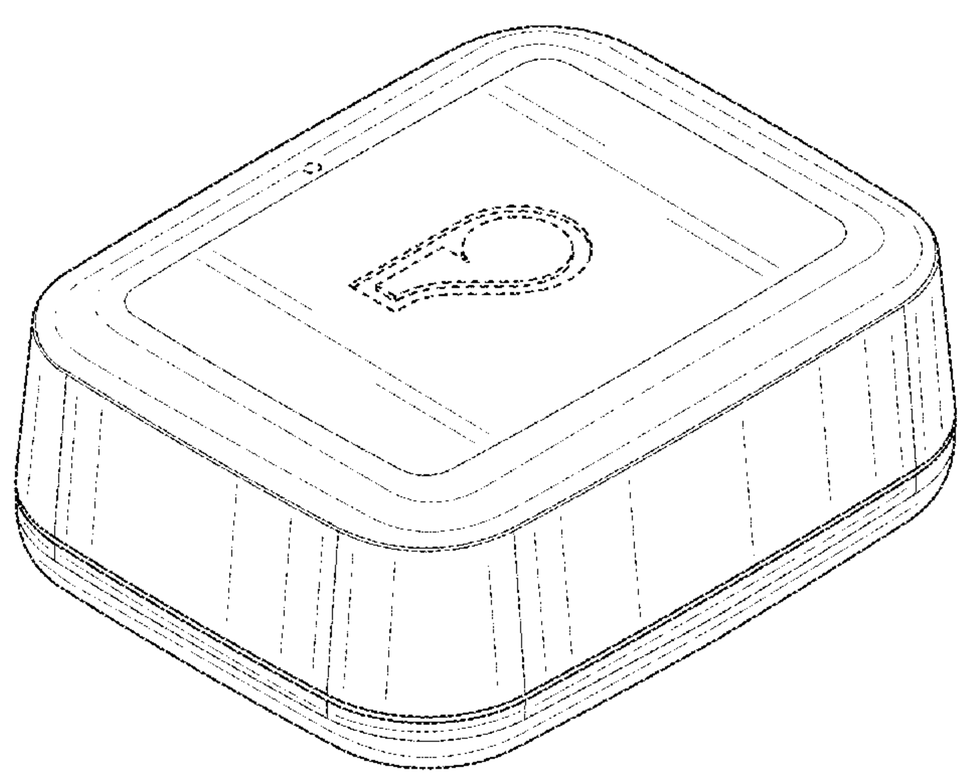

(58) **Field of Classification Search**
USPC D3/231, 229, 228, 254; D29/101.1, D29/101.3, 101.4, 101.5, 103, 122; D24/190–192, 199, 186, 207, 165, 206, D24/169; D10/40, 70, 50, 52, 60, 61, D10/104.1, 104.2; D14/344, 242; D12/409; D11/4; D8/333, 343, 346; D26/38; D21/662, 804; D2/627
CPC A01K 27/00; A01K 27/001; A01K 27/002; A01K 27/003; A01K 27/004; A01K 27/005; A01K 27/006; A01K 27/008; A01K 27/009; A01K 25/00; A01K 15/04; A01K 15/021; A01K 15/022; A01K 11/006; A01K 11/008; B68B 1/02; B68B 1/01
See application file for complete search history.

(56) **References Cited**

U.S. PATENT DOCUMENTS

1,380,177 A 5/1921 Louis
1,402,827 A 1/1922 Louis
1,754,200 A 4/1930 Janes
1,839,896 A 1/1932 Theodore
2,364,266 A 12/1944 Edward
3,251,110 A 5/1966 John
3,477,409 A 11/1969 Costanzo
3,782,017 A 1/1974 Graham
D242,675 S 12/1976 McNair
4,208,986 A 6/1980 Costanzo
4,318,234 A 3/1982 Charles et al.
D264,260 S 5/1982 Terino
4,742,503 A 5/1988 Braun et al.
4,748,938 A * 6/1988 Owen A01K 27/009 119/650
4,802,482 A * 2/1989 Gonda A01K 15/021 119/720
4,809,700 A 3/1989 Castelli et al.
D300,678 S 4/1989 Barrault
4,821,424 A 4/1989 Loggins
4,881,492 A 11/1989 Jones
4,940,020 A 7/1990 Gordon
D337,411 S 7/1993 Smith
D349,864 S 8/1994 Dunlap et al.
5,473,830 A 12/1995 Doble
5,603,094 A 2/1997 Greear
5,623,731 A 4/1997 Ehrgott et al.
D410,206 S 5/1999 Slater
6,202,599 B1 3/2001 Cutler
D445,352 S * 7/2001 So D30/199
6,314,058 B1 11/2001 Lee
D454,991 S 3/2002 Muller
D460,221 S 7/2002 Sloot
D464,941 S 10/2002 Latto et al.
D471,678 S 3/2003 Hanna
D478,830 S 8/2003 So
6,695,269 B1 2/2004 Anscher
6,720,879 B2 4/2004 Edwards
6,805,460 B1 10/2004 Zoller et al.
D516,754 S 3/2006 Curtis
D521,927 S 5/2006 Franck et al.
D523,188 S 6/2006 Lord
D524,282 S 7/2006 Beasley et al.
7,107,941 B2 9/2006 Wang
7,140,989 B2 11/2006 Poruchny
D535,281 S 1/2007 Yang
D537,409 S 2/2007 Suzuki
D558,209 S 12/2007 Ikeda et al.
D565,182 S 3/2008 Cheng et al.
7,341,561 B2 3/2008 Tanaka et al.
D575,009 S 8/2008 Murrell
D575,289 S 8/2008 Kuo et al.
D584,176 S 1/2009 Maruyama et al.
D591,012 S 4/2009 Geissler
D592,078 S * 5/2009 Tang D10/30
D592,647 S 5/2009 L'Henaff et al.
D594,404 S 6/2009 Kuo et al.
D594,874 S 6/2009 Sheba et al.
D597,676 S 8/2009 Copeland et al.
D599,241 S 9/2009 Andre et al.
D607,617 S 1/2010 Golenz
D608,277 S 1/2010 Cano et al.
D609,636 S 2/2010 Jensen
7,705,736 B1 4/2010 Kedziora
D618,802 S 6/2010 Brady et al.
D619,256 S 7/2010 Brady et al.
D619,308 S 7/2010 Roysky
D625,262 S 10/2010 Lee et al.
D627,718 S 11/2010 Houghton
D656,096 S 3/2012 Sasada et al.
D657,274 S 4/2012 Neethling
D663,684 S 7/2012 Yang
D663,685 S 7/2012 Yang
D667,322 S 9/2012 Madrack
D668,562 S 10/2012 Madrack
D669,027 S 10/2012 Kumpula et al.
D671,921 S 12/2012 Beall et al.
D673,110 S 12/2012 Sasada et al.
D673,908 S 1/2013 Koch
8,353,603 B2 1/2013 Berry et al.
8,356,579 B2 1/2013 Sullivan
D680,541 S 4/2013 Lee et al.
D693,814 S 11/2013 Park
D694,228 S 11/2013 Richter
D695,468 S 12/2013 Finlan
D698,376 S 1/2014 Funato et al.
D704,634 S 5/2014 Eidelman et al.
D706,321 S 6/2014 Oetlinger et al.
D709,396 S 7/2014 Eidelman et al.
D714,498 S * 9/2014 Khubani D30/199
D724,971 S 3/2015 Bailey et al.
D724,991 S 3/2015 Oh
D725,511 S 3/2015 Read et al.
D725,841 S 3/2015 So
D725,850 S 3/2015 Eidelman et al.
D742,817 S 11/2015 Lammers-Meis et al.
9,179,647 B2 11/2015 Lambert
D744,656 S * 12/2015 Schempp D24/165
D744,658 S 12/2015 Hilkey-Boyatt
D745,421 S 12/2015 Akana et al.
D749,570 S 2/2016 Lee
D761,138 S 7/2016 Manabe et al.
D769,869 S 10/2016 Zhou et al.
D772,745 S 11/2016 Henne et al.
D774,651 S 12/2016 Kaib et al.
D778,746 S 2/2017 Renganathan
D780,238 S 2/2017 Kato
D784,325 S 4/2017 Kim et al.
D788,999 S 6/2017 Zinn et al.
D794,206 S 8/2017 Cohrs
D797,100 S 9/2017 Wieser et al.
D798,861 S 10/2017 Wieser et al.
D800,085 S 10/2017 Shepher
D800,721 S 10/2017 Kim et al.
D805,938 S * 12/2017 Park D10/104.1
9,861,080 B1 1/2018 Hathway et al.
D812,499 S 3/2018 Kuh et al.
D815,061 S 4/2018 Wei
D815,077 S 4/2018 Sibley et al.
9,949,459 B2 4/2018 Pattie et al.
D816,520 S 5/2018 Elrod et al.
D816,917 S 5/2018 Lee
D817,558 S 5/2018 Lee et al.
D817,559 S 5/2018 Lee
D819,633 S 6/2018 Jun
9,986,791 B2 6/2018 Botkus et al.
D822,516 S * 7/2018 Van Curen D10/104.1
10,021,946 B2 7/2018 Kaneko
D828,189 S 9/2018 Benedetti
D828,816 S * 9/2018 Spors D13/162
D838,716 S 1/2019 Teng et al.
D839,753 S 2/2019 Domke et al.
D840,251 S 2/2019 Choi

(56) **References Cited**

U.S. PATENT DOCUMENTS

D841,005	S	2/2019	Lin	
D844,570	S *	4/2019	Kornacki	D13/162
D846,748	S	4/2019	Benedikter	
D848,293	S *	5/2019	Laurans	D10/70
D850,627	S	6/2019	Purani et al.	
D852,436	S	6/2019	Leach	
D854,760	S *	7/2019	Mott	D30/152
10,376,020	B1	8/2019	Doyle	
D858,904	S *	9/2019	Zinn	D30/152
10,420,401	B2	9/2019	Eidelman	
D861,534	S	10/2019	Paik	
D865,301	S *	10/2019	Eidelman	D30/152
D867,685	S	11/2019	Del Moral	
10,463,021	B2	11/2019	Lee	
D871,240	S *	12/2019	Burns	D10/70
D898,613	S *	10/2020	Stapleton	D11/216
D906,526	S *	12/2020	Wade	D24/186
D910,187	S *	2/2021	Benedikter	D24/186
D911,706	S *	3/2021	Hyun	D3/273
D918,071	S *	5/2021	Nothacker	D10/70
2001/0004238	A1 *	6/2001	Gerig	A01K 15/021 340/573.3
2002/0010390	A1	1/2002	Guice et al.	
2003/0094145	A1	5/2003	Cheng	
2003/0116101	A1	6/2003	Kim et al.	
2006/0000194	A1	1/2006	Duncan et al.	
2006/0236955	A1	10/2006	Lord	
2006/0236956	A1	10/2006	Lord	
2007/0209604	A1	9/2007	Groh et al.	
2007/0221140	A1	9/2007	Warren et al.	
2008/0210176	A1	9/2008	Lalor	
2009/0013939	A1	1/2009	Santiago et al.	
2009/0038670	A1	2/2009	Shu	
2010/0162966	A1 *	7/2010	McFarland	A01K 27/001 119/794
2012/0048213	A1	3/2012	Konovalov	
2013/0006065	A1	1/2013	Yanai et al.	
2013/0099920	A1	4/2013	Song	
2014/0290013	A1	10/2014	Eidelman et al.	
2016/0150857	A1	6/2016	Botkus	
2016/0216130	A1	7/2016	Abramson	
2016/0253889	A1	9/2016	Keyton	
2016/0269868	A1	9/2016	Su	
2017/0079383	A1	3/2017	Huang	
2017/0208775	A1	7/2017	Van Curen et al.	
2018/0098525	A1	4/2018	Lee et al.	
2019/0183094	A1 *	6/2019	Arnett	A01K 27/005
2020/0015456	A1 *	1/2020	Van Curen	A01K 27/009

FOREIGN PATENT DOCUMENTS

CN	105981418 B		11/2019
CN	305855591	*	6/2020
DE	202005013615 U1		11/2005
EP	007428107-0001	*	2/2020
GB	9007428099-0001	*	12/2019
JP	1602690 S		4/2017

OTHER PUBLICATIONS

Whistle Go—Health & Location Tracker for Pets—Waterproof GPS Pet Tracker, published Jul. 23, 2019 [online][retrieved May 17, 2021], Available from Internet, URL: https://www.amazon.com/Whistle-100-04101-00-Health-Location-Tracker/dp/B07TB5M9FC/ref=sr_1_12?dchild=1&keywords=whistle+dog&qid=1621017829&sr=8-12.*

Whistle FIT, published 2018 [online], [retrieved on Jul. 17, 2018], Available from internet, URL: <https://www.petinsight.com/whistle-fit/>, 5 pgs.

"Amazon.com, Inc. Web page, JPO's Prior Design Ref. No. HJ27044048", Date first available, Oct. 5, 2015, 7 pp.

"U.S. Appl. No. 29/580,756, filed Oct. 12, 2016, 6 pgs".

"Whistle 3 GPS Pet Tracker & Activity, Available for sale Jun. 8, 2007 [online]", Amazon.com, [Retrieved on Jul. 1, 2018], Available from internet URL:<https://www.amazon.com/dp/b01n7mwkwy/ref=sspa_dk_detail_1?pcs=1, 9 pages.

* cited by examiner

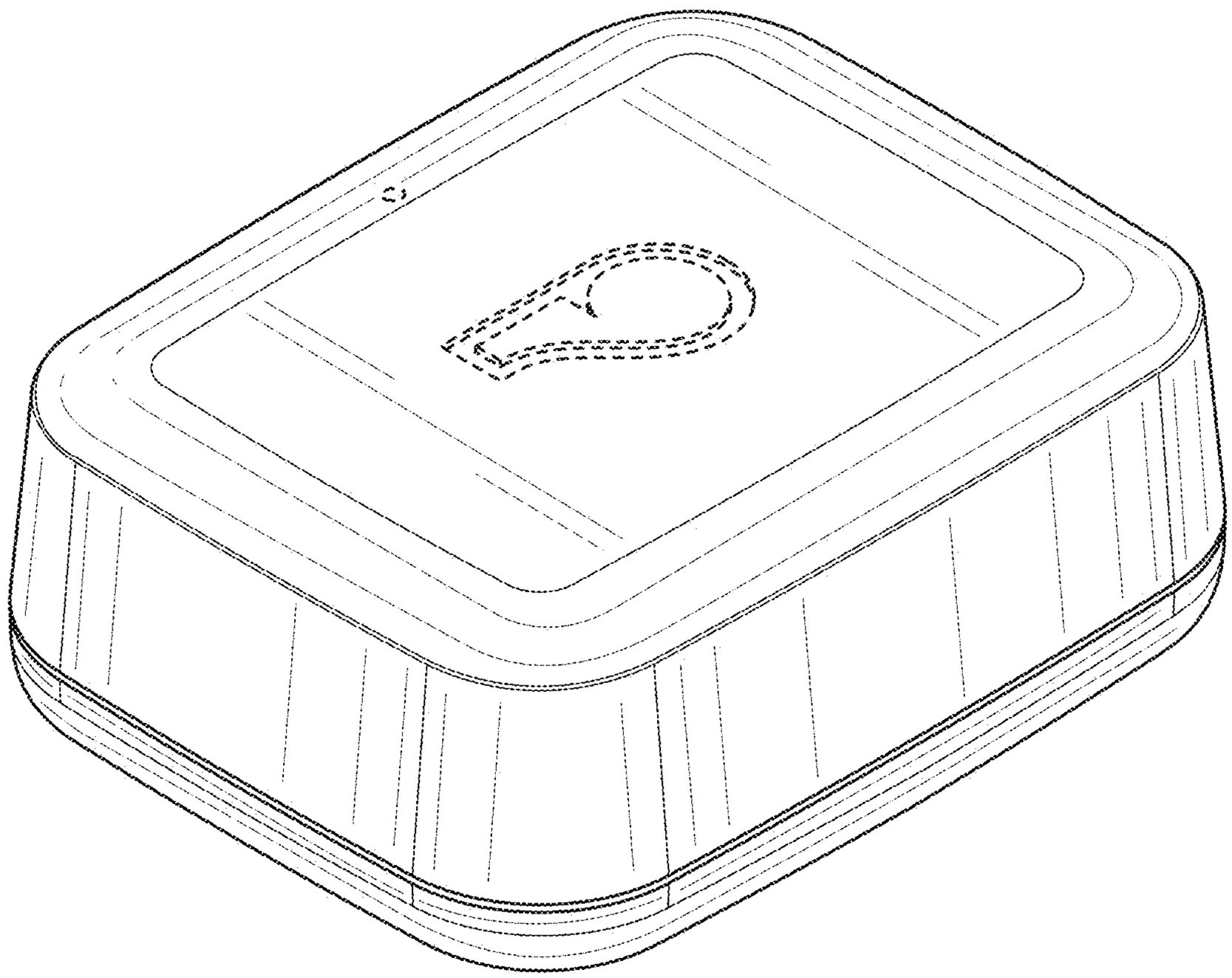

FIG. 1

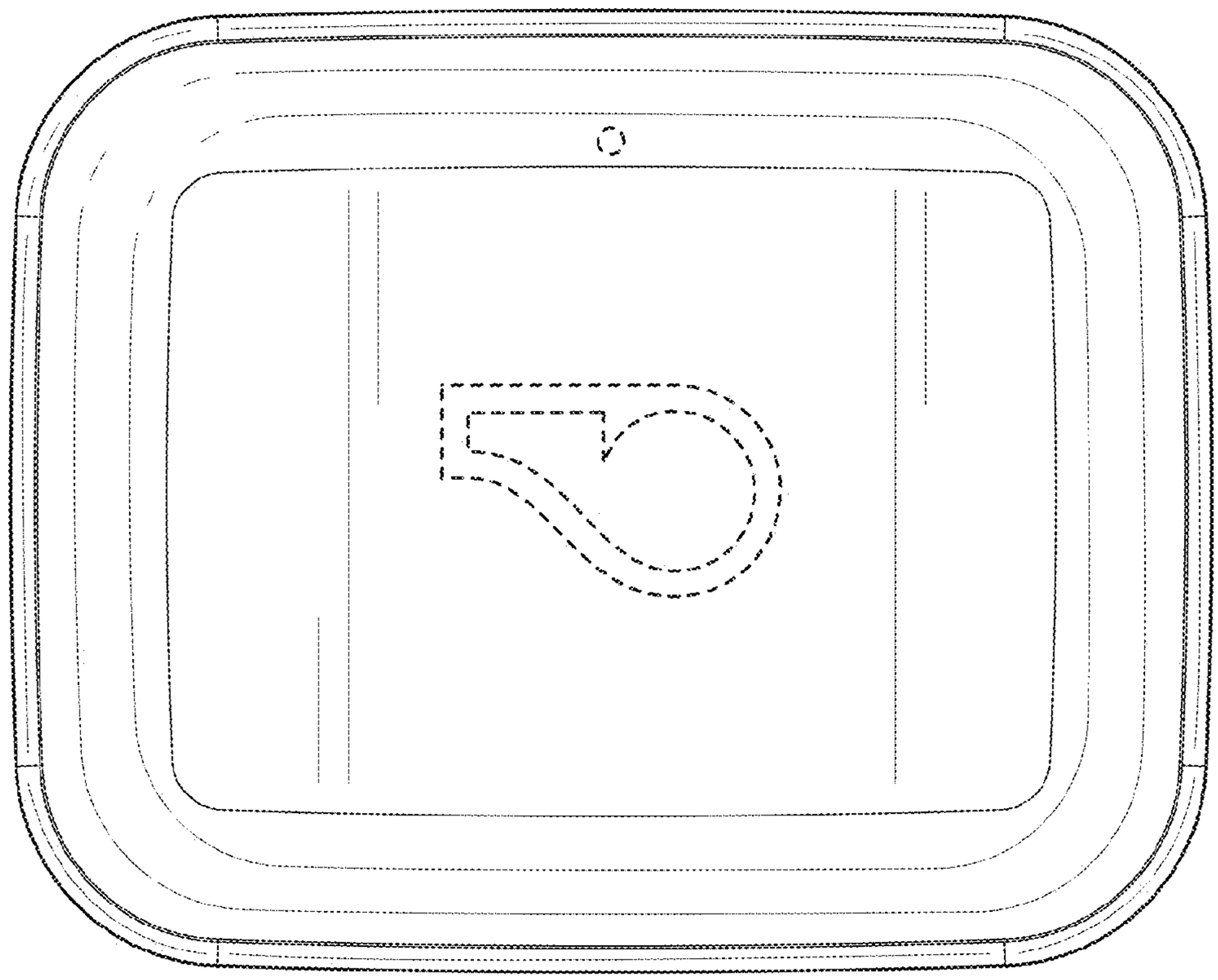

FIG. 2

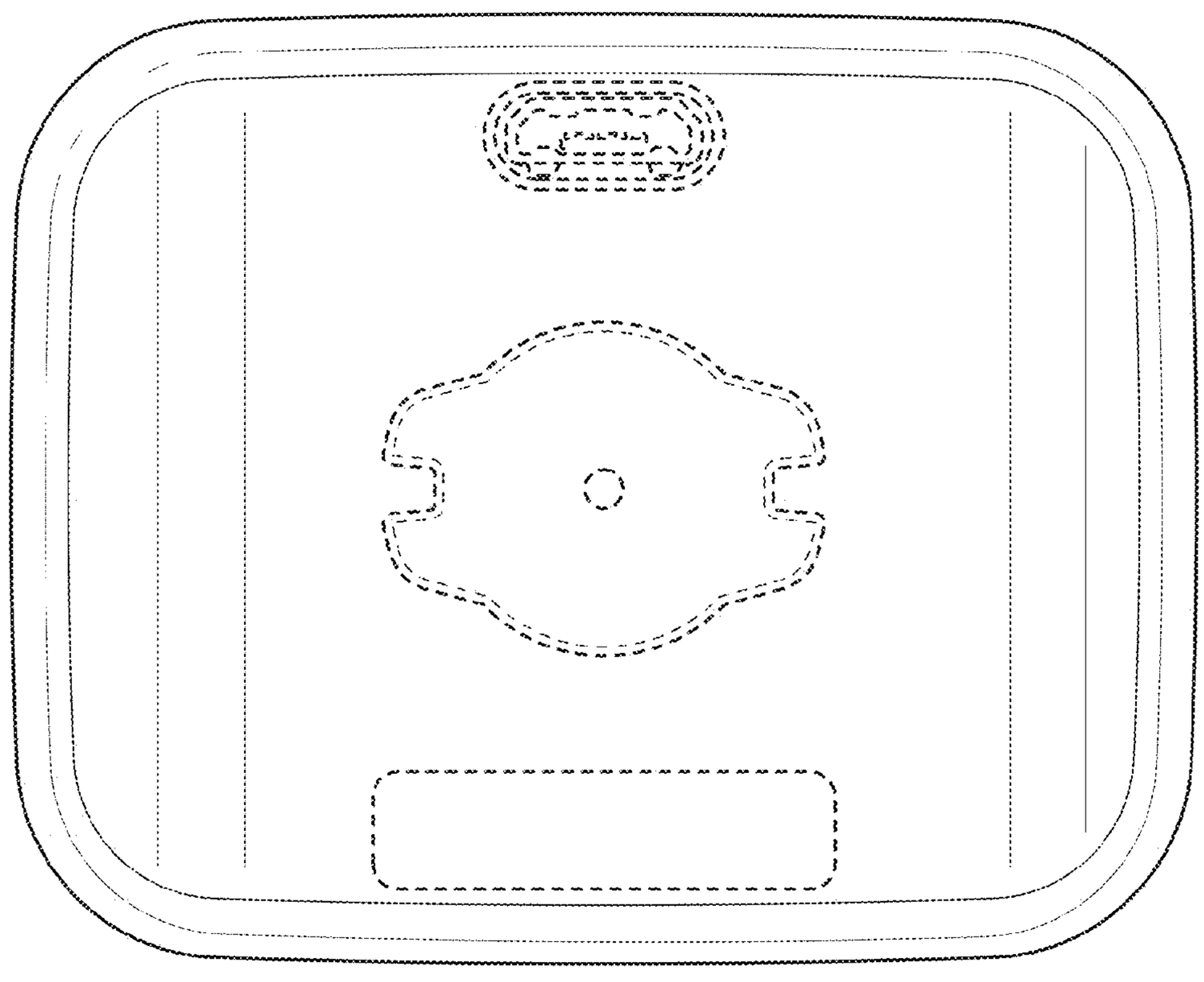

FIG. 3

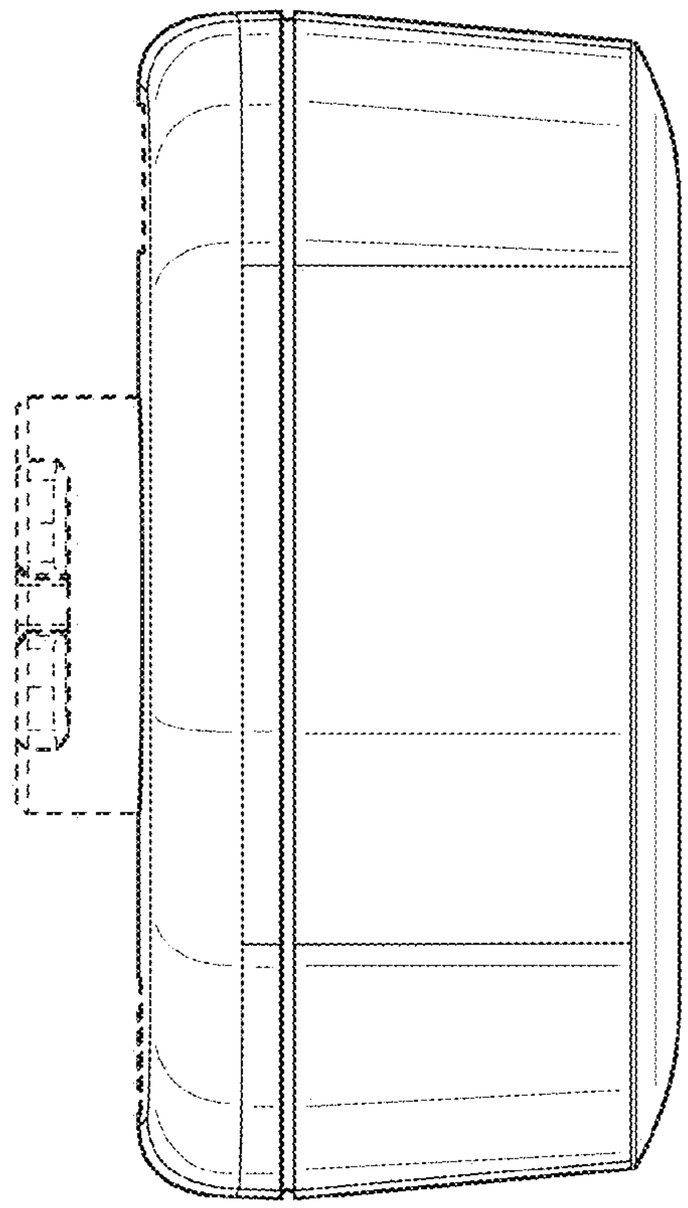

FIG. 4

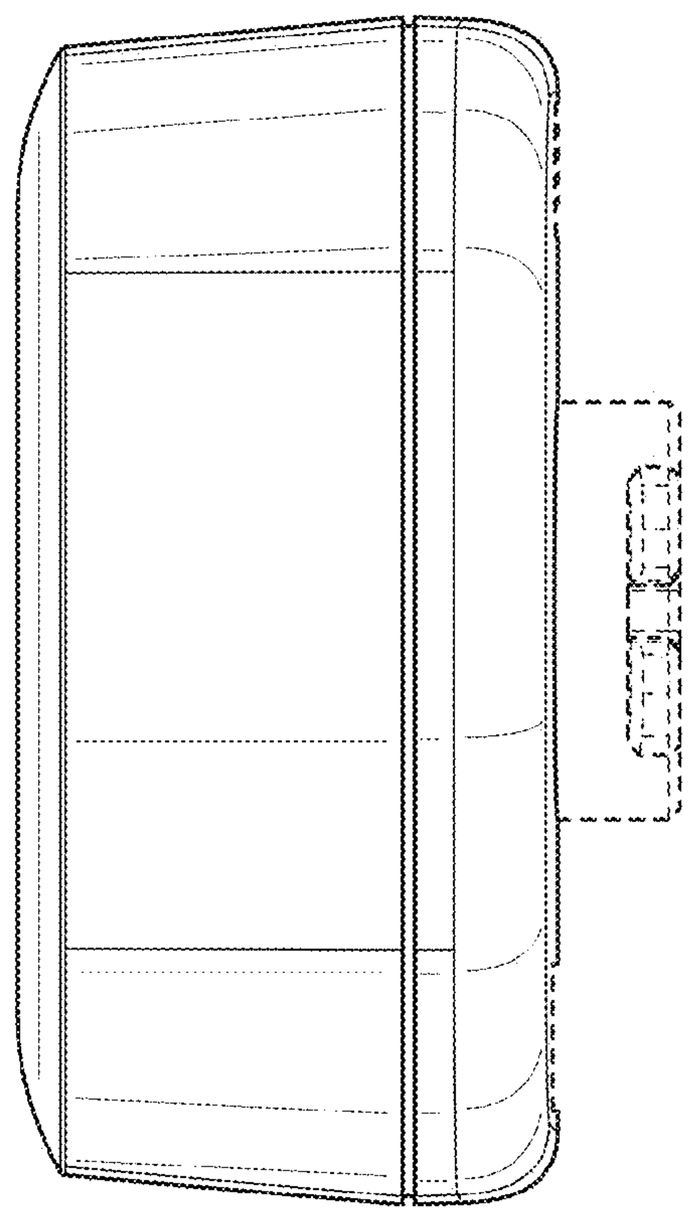

FIG. 5

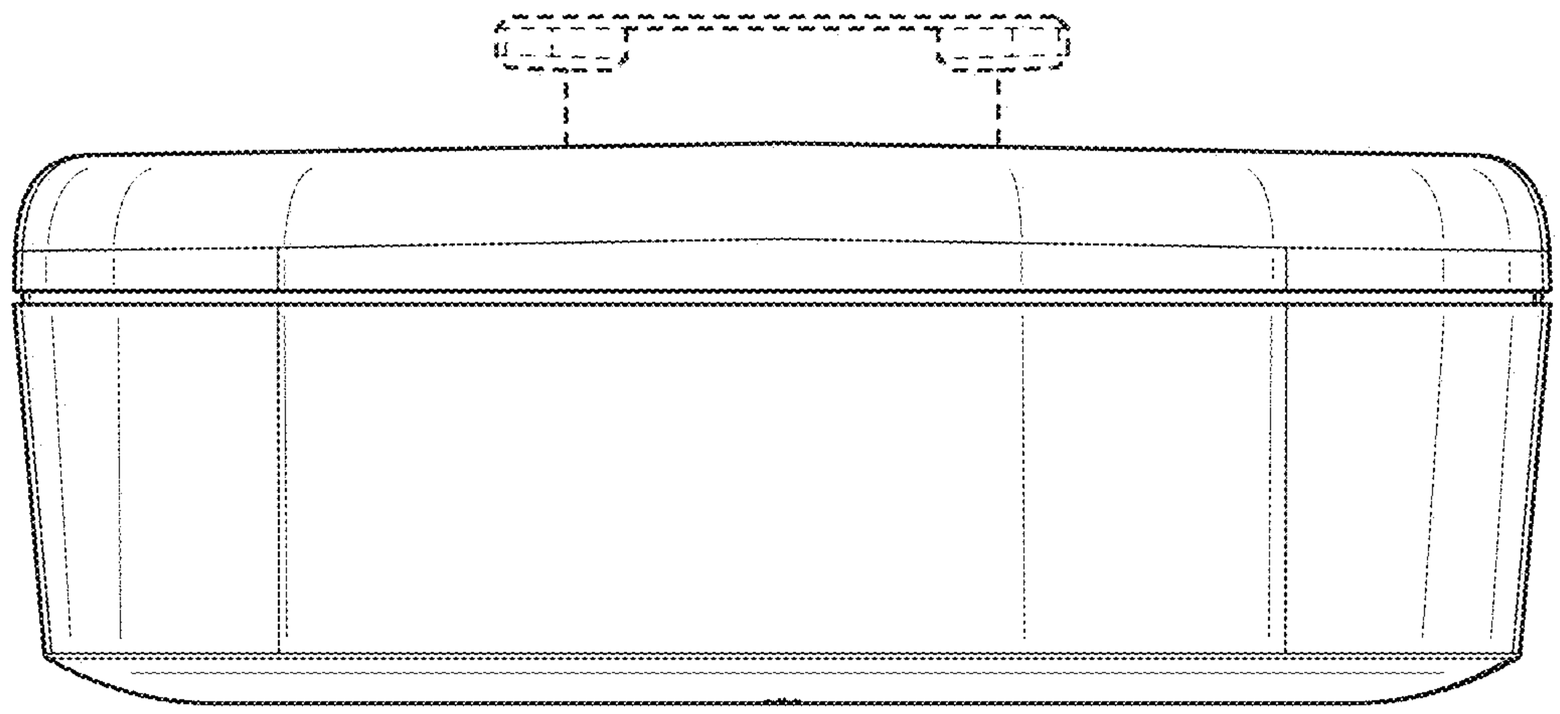

FIG. 6

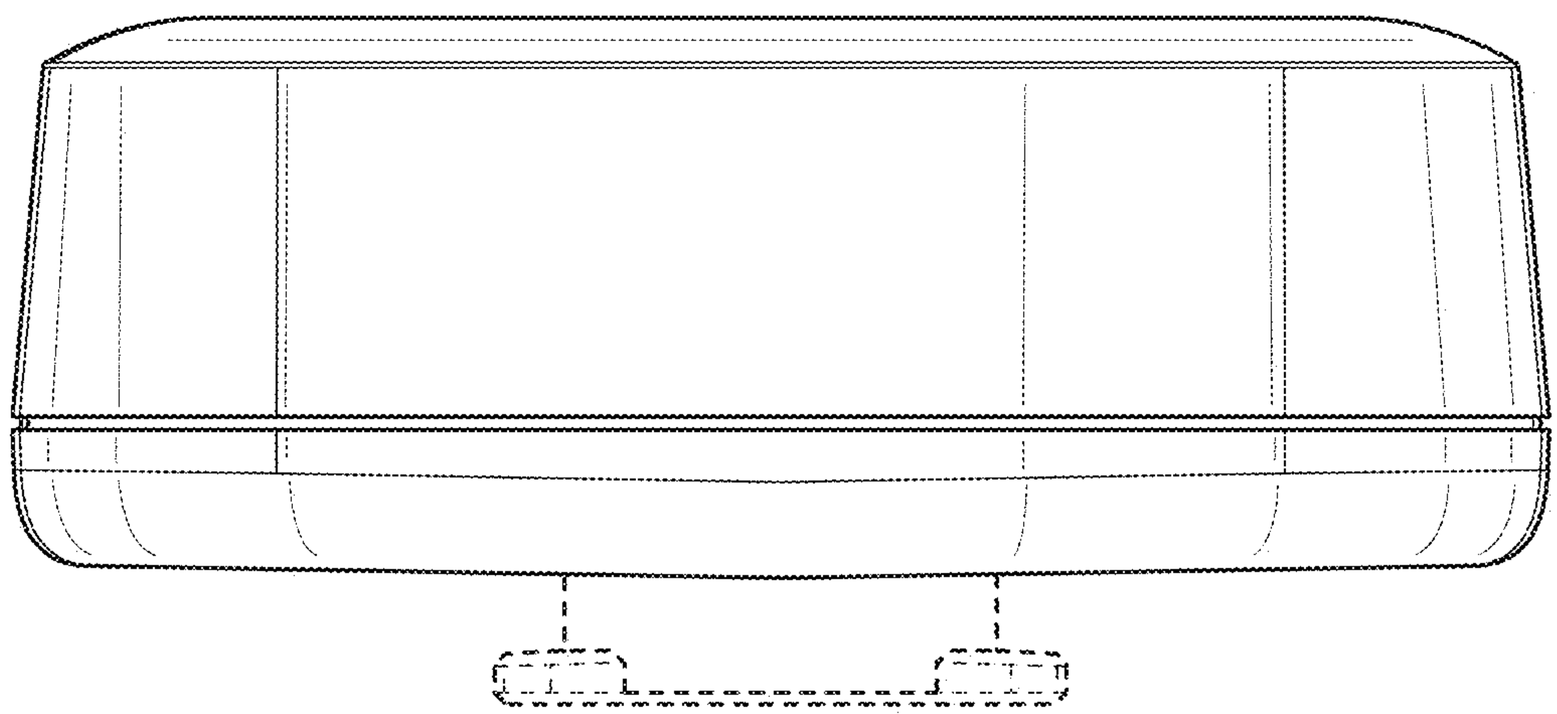

FIG. 7

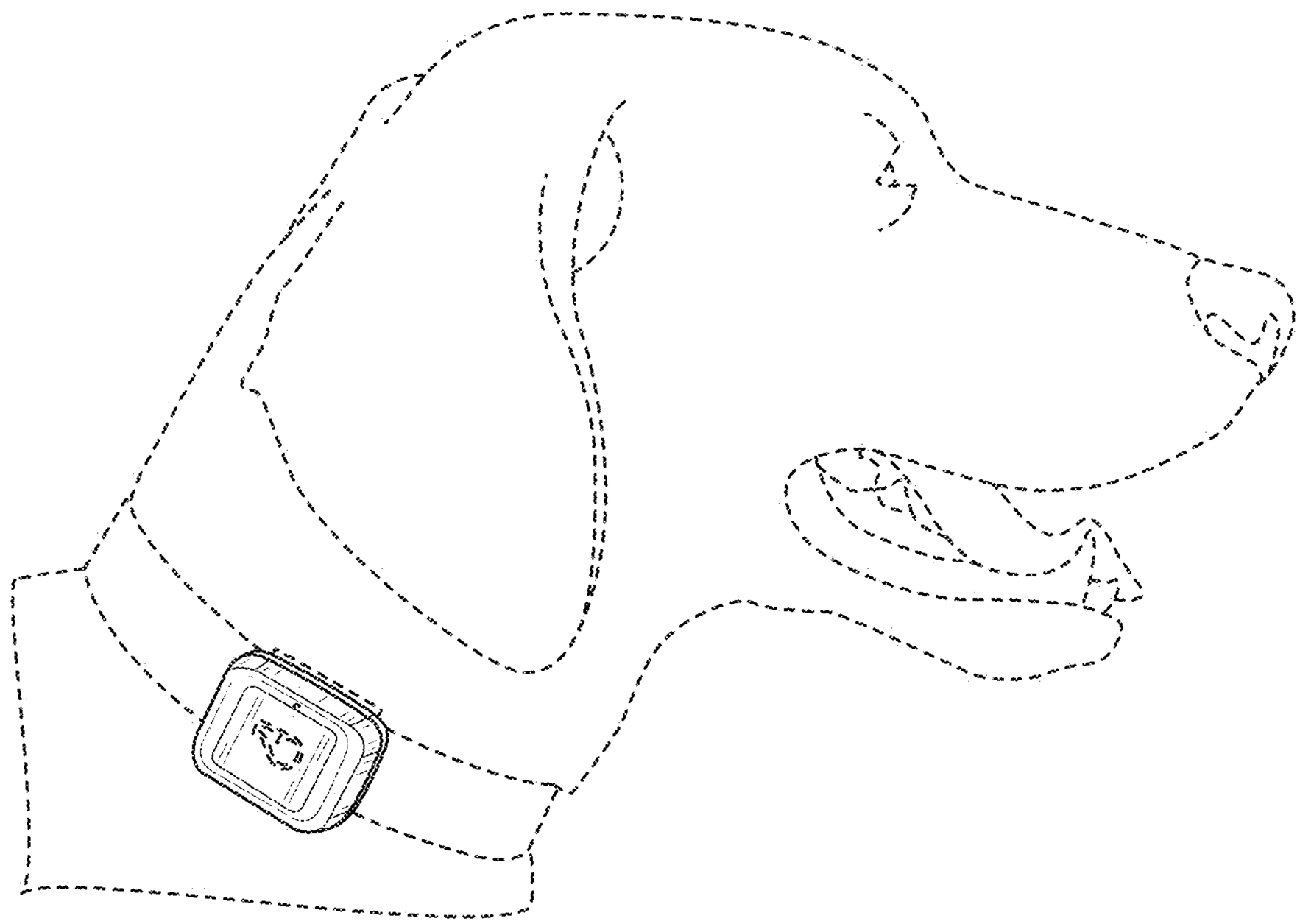

FIG. 8