US00D949787S

(12) United States Design Patent

Pohjola et al.

(10) Patent No.: US D949,787 S
(45) Date of Patent: ** Apr. 26, 2022

(54) **EQUIPMENT FOR DISTRIBUTION OF ELECTRIC POWER**

(71) Applicant: **Ampner Oy**, Vaasa (FI)

(72) Inventors: **Mikko Pohjola**, Vaasa (FI); **Henri Ulmanen**, Vaasa (FI)

(73) Assignee: **Ampner Oy**, Vaasa (FI)

(**) Term: **15 Years**

(21) Appl. No.: **29/710,237**

(22) Filed: **Oct. 22, 2019**

(30) **Foreign Application Priority Data**

Apr. 23, 2019 (EM) 006391579

(51) **LOC (13) Cl.** **13-03**

(52) **U.S. Cl.**
USPC **D13/110**; D13/123; D13/124

(58) **Field of Classification Search**
USPC D13/101, 102, 103, 107, 110, 112, 118, D13/120, 123, 133, 147, 154, 158–160, D13/162–162.1, 173, 177, 178, 184, 199; D14/240
CPC H02J 2007/0062; H02J 7/34; G06F 1/263; H05B 33/0833; H05B 33/00; H05K 5/00; H05K 5/0013; B60T 7/20; H01R 12/7076
See application file for complete search history.

(56) **References Cited**

U.S. PATENT DOCUMENTS

D75,571	S	*	6/1928	Lawrence	D13/184
2,898,522	A	*	8/1959	Handen	H01R 12/7076 361/735
4,652,969	A	*	3/1987	Stegenga	H05K 5/0013 220/4.24
D299,465	S	*	1/1989	Helstab	D13/184
D319,630	S	*	9/1991	Hudson	D13/184
D395,897	S	*	7/1998	Honma	D13/184
D408,823	S	*	4/1999	Kirby	D14/240
D604,238	S	*	11/2009	Engel	D13/110
D610,540	S	*	2/2010	Engel	D13/110
D620,885	S	*	8/2010	Donth	D13/110
D648,676	S	*	11/2011	Brookshire	D13/110

(Continued)

FOREIGN PATENT DOCUMENTS

EM	005410529-0001	*	7/2018
EM	006272050-0001	*	4/2019

(Continued)

OTHER PUBLICATIONS

Ampner, Date Not Available, [online], [site visited Sep. 14, 2021]. Available from internet, URL: https://www.ampner.com/wp-content/uploads/2021/06/Ampner-ACE-300-four-pages.pdf (Year: 2021).*

(Continued)

Primary Examiner — Shawn T Gingrich
Assistant Examiner — Bryan Nolan Melvin
(74) *Attorney, Agent, or Firm* — Meunier Carlin & Curfman LLC

(57) **CLAIM**

The ornamental design for equipment for distribution of electric power, as shown and described.

DESCRIPTION

FIG. **1** is a perspective view of the equipment for distribution of electric power, showing our new design;
FIG. **2** is a front view thereof;
FIG. **3** is a right side view thereof;
FIG. **4** is a top plan view thereof;
FIG. **5** is a rear view thereof;
FIG. **6** is a left side view thereof; and,
FIG. **7** is a bottom plan view thereof.

1 Claim, 7 Drawing Sheets

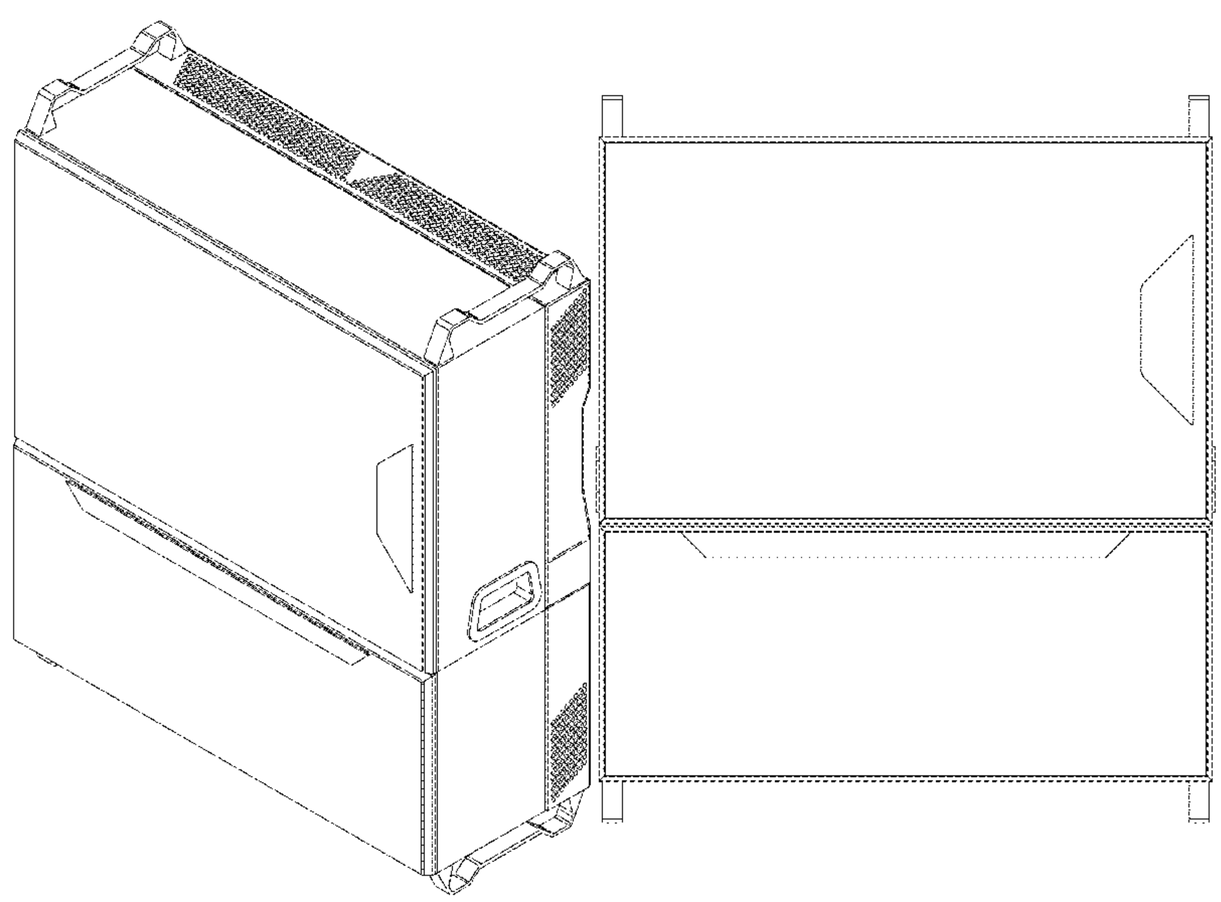

(56) **References Cited**

U.S. PATENT DOCUMENTS

D906,990	S *	1/2021	Choubey	D13/110
2018/0334118	A1 *	11/2018	Masui	H02J 7/34

FOREIGN PATENT DOCUMENTS

EM	006272043-0001	*	6/2019
GB	9006391579-0001	*	4/2019

OTHER PUBLICATIONS

SMA America, dated Mar. 24, 2020, [online], [site visited Sep. 14, 2021]. Available from internet, URL: https://www.solarpowerworldonline.com/2020/03/sma-1500-v-solar-inverter-direct-480-v-output/ (Year: 2020).*

* cited by examiner

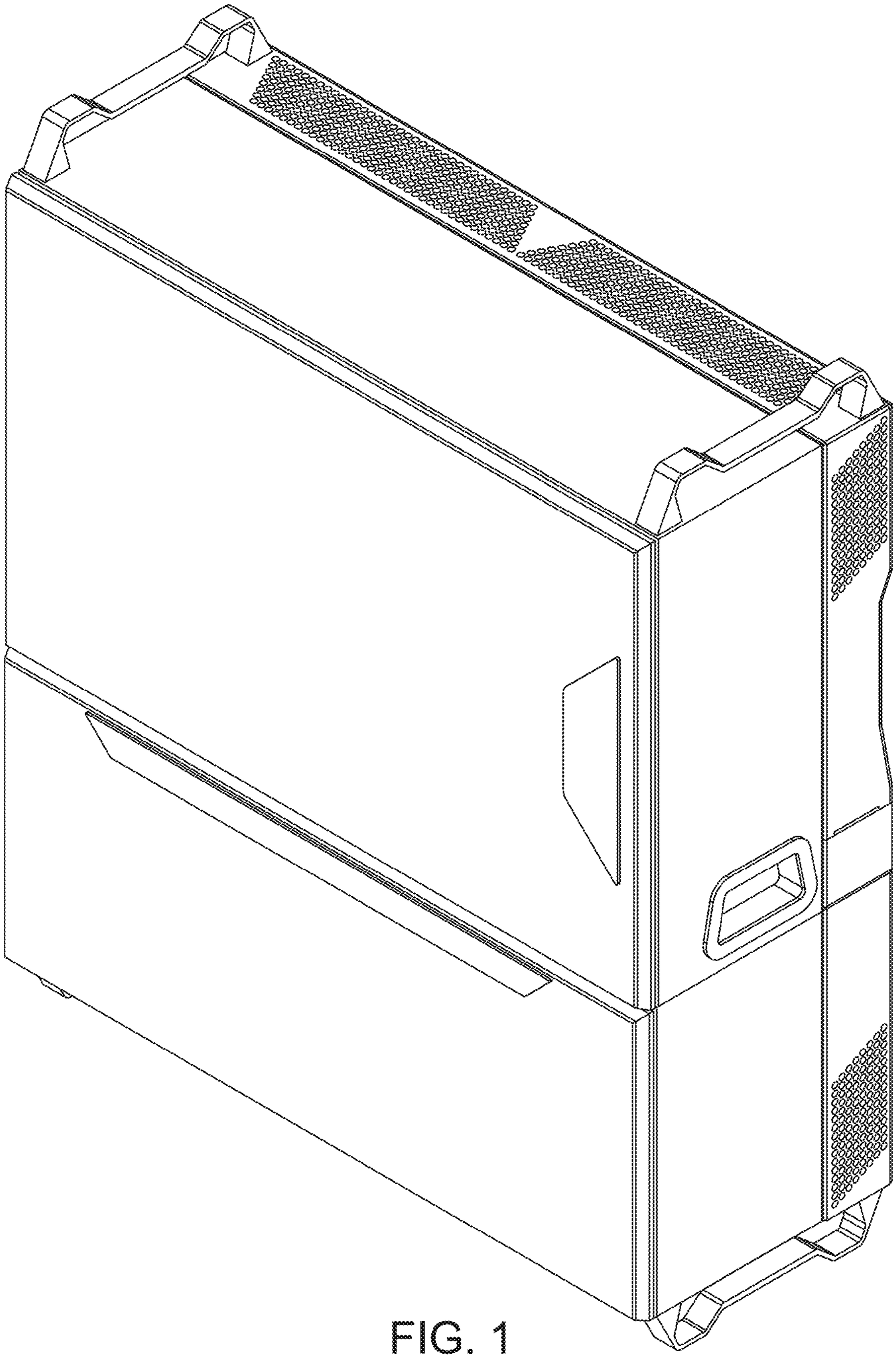

FIG. 1

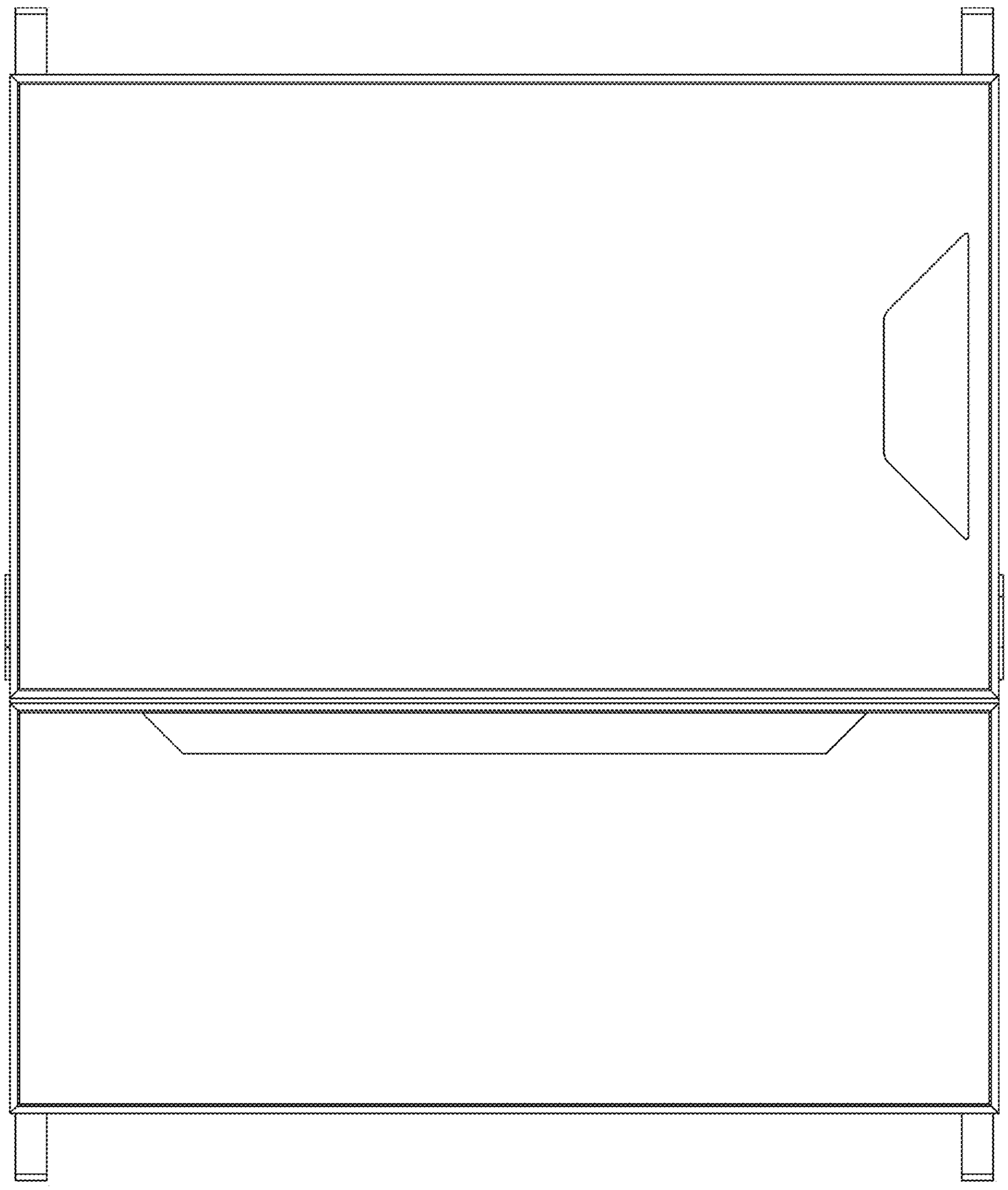

FIG. 2

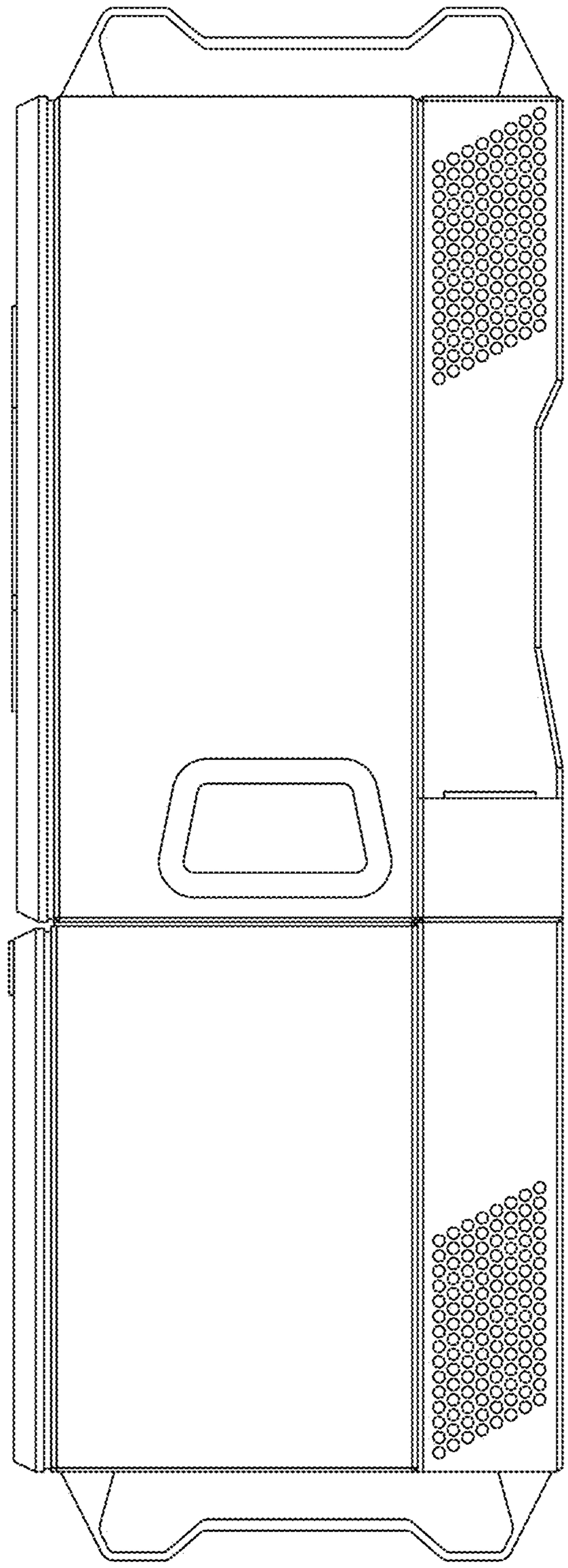

FIG. 3

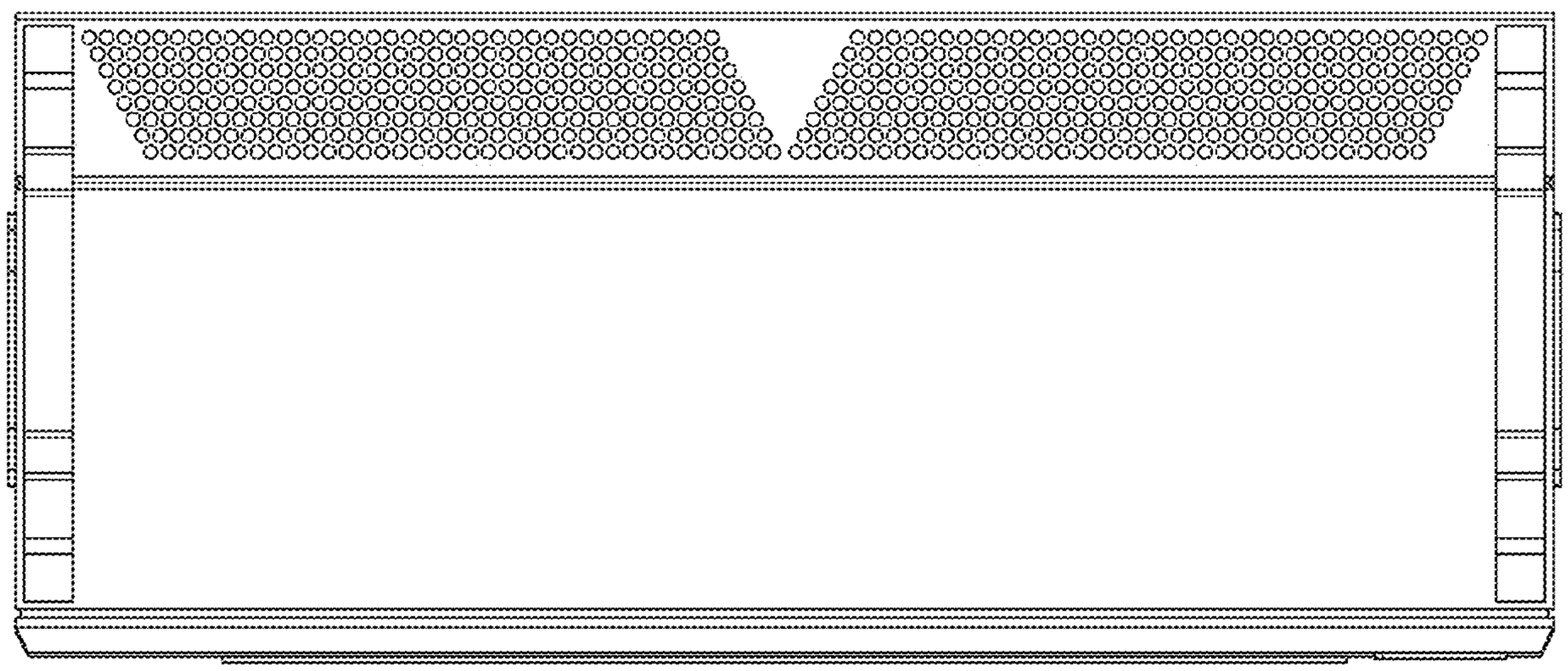

FIG. 4

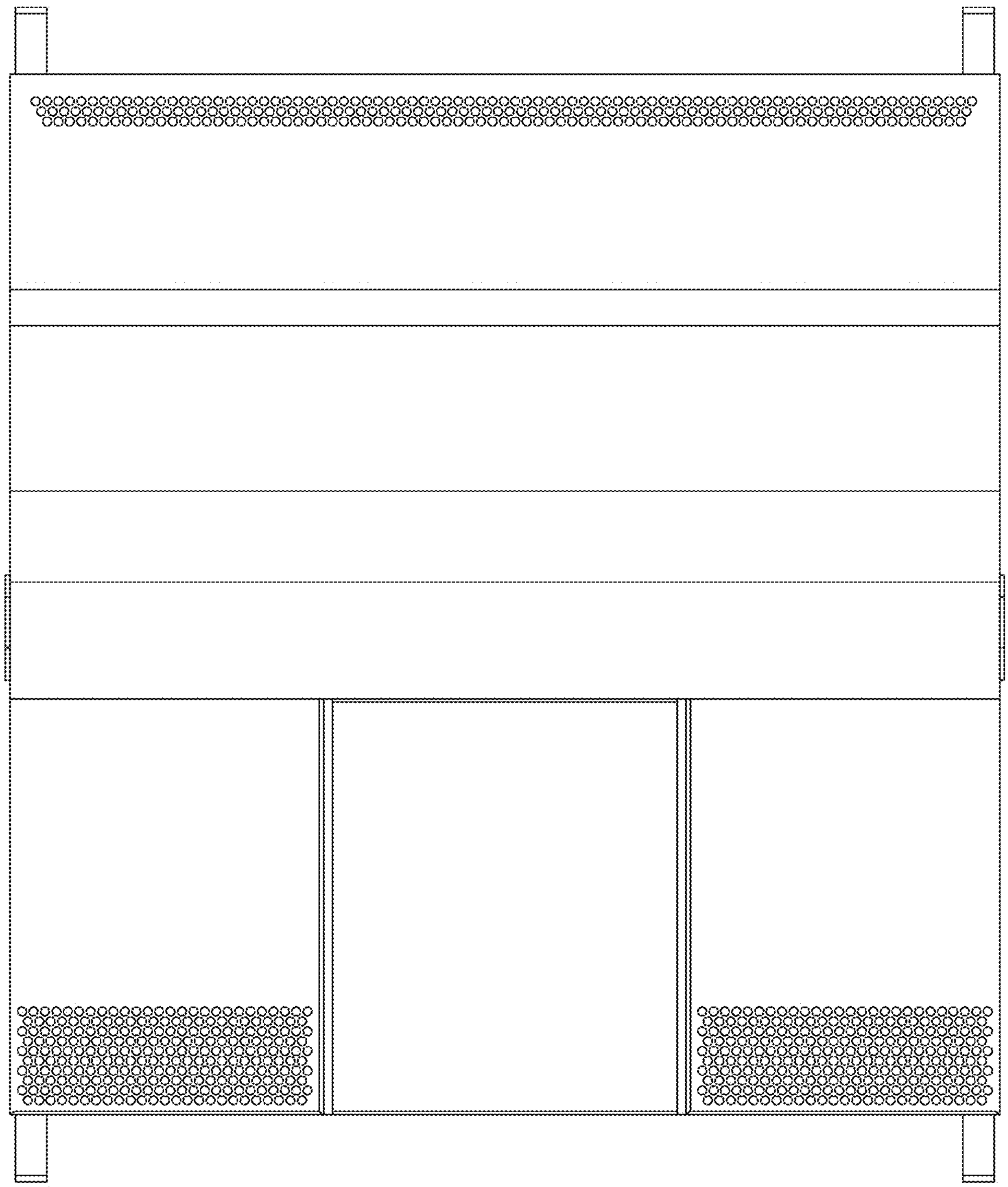

FIG. 5

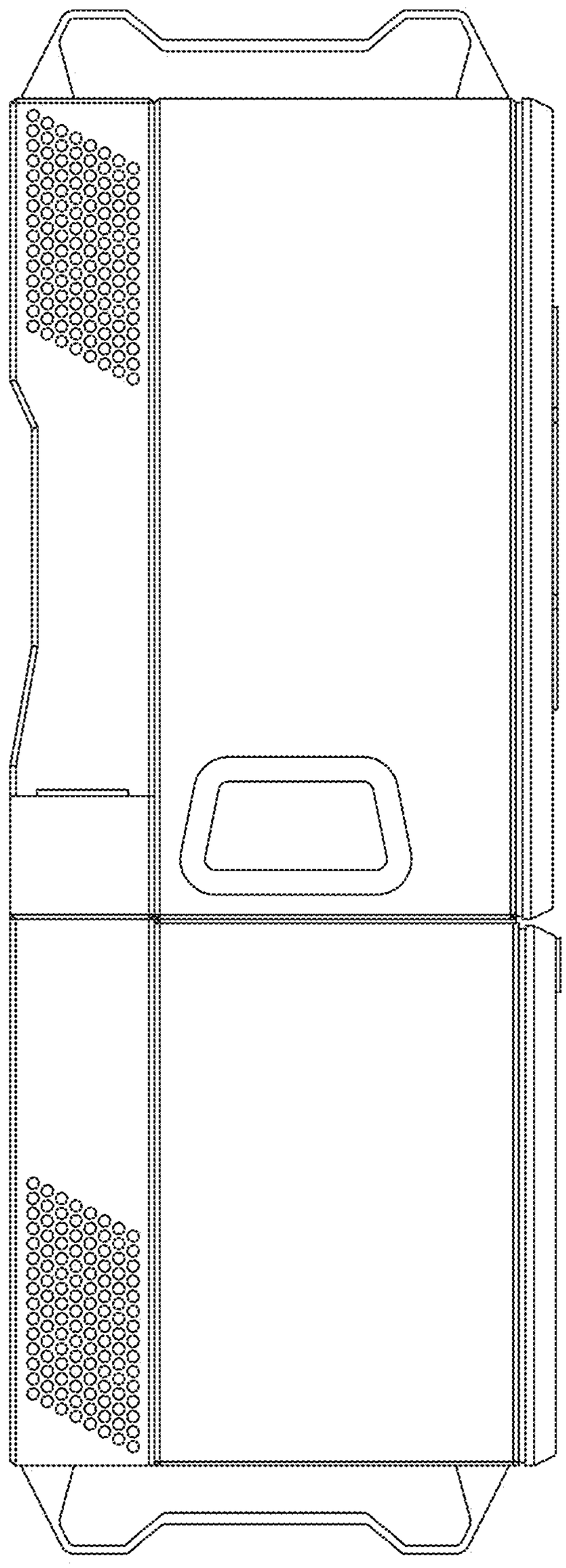

FIG. 6

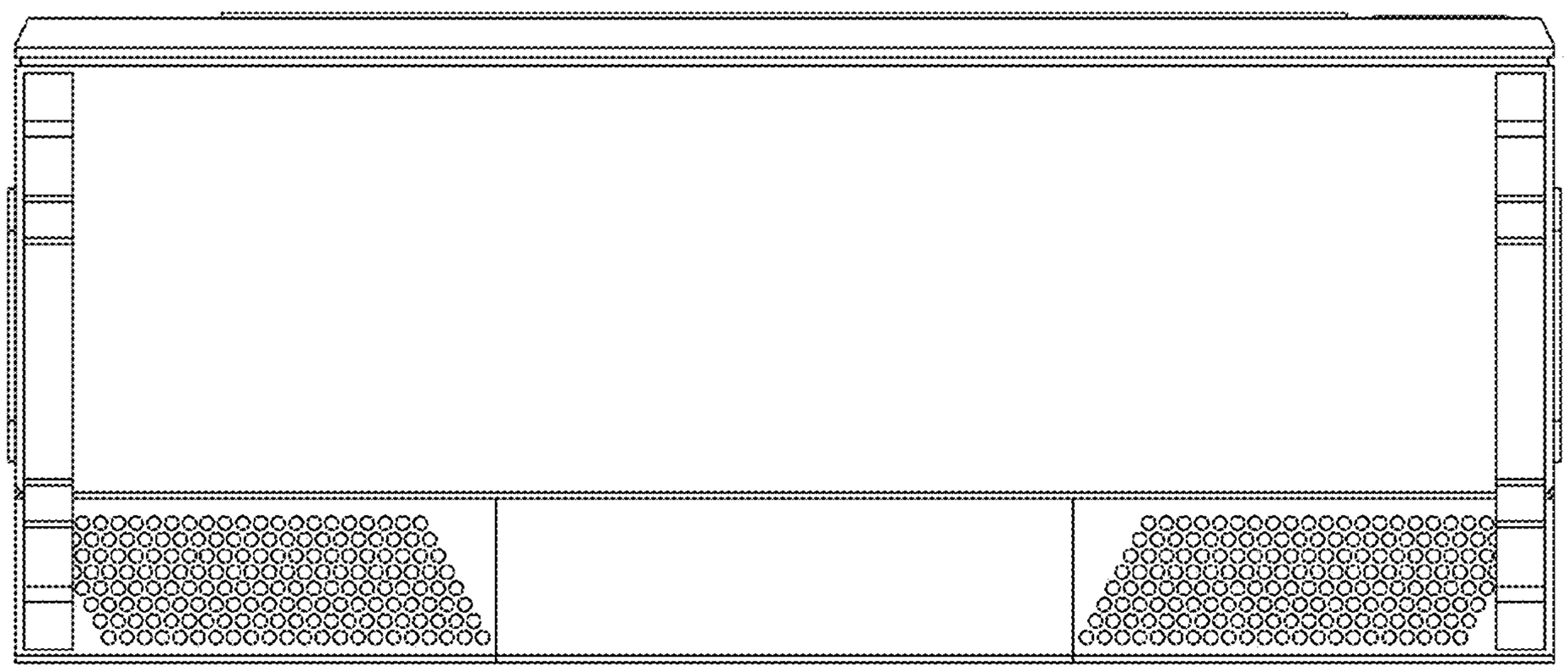

FIG. 7