US00D949651S

(12) United States Design Patent
Preston

(10) **Patent No.: US D949,651 S**
(45) **Date of Patent: ** Apr. 26, 2022**

(54) **UNIVERSAL CHOKE WRENCH**

(71) Applicant: **Michael Preston**, Clinton, PA (US)

(72) Inventor: **Michael Preston**, Clinton, PA (US)

(**) Term: **15 Years**

(21) Appl. No.: **29/751,778**

(22) Filed: **Sep. 23, 2020**

(51) **LOC (13) Cl.** **08-05**

(52) **U.S. Cl.**
USPC **D8/21**; D8/105

(58) **Field of Classification Search**
USPC D8/14, 21, 26, 105
CPC B25B 33/00; B25B 33/005; B25B 13/44; B25B 13/00; B25B 13/005; B25B 13/465; B25B 15/008; B25B 13/461
See application file for complete search history.

(56) **References Cited**

U.S. PATENT DOCUMENTS

2,549,910	A	4/1951	Lane	
3,276,299	A	10/1966	Halburian	
3,416,395	A *	12/1968	Hanson	B25B 23/16 81/125
4,291,425	A	9/1981	Sweitzer	
4,644,974	A	2/1987	Zingg	
4,856,387	A	8/1989	Gibson	
5,272,942	A	12/1993	Hull et al.	
5,685,207	A	11/1997	Hubert	
D399,716	S *	10/1998	Carr	D8/21
6,336,385	B1 *	1/2002	Wang	B25B 13/56 81/177.4
6,374,706	B1	4/2002	Newman	
7,331,261	B2	2/2008	Blizniuk et al.	
D586,634	S *	2/2009	Lai	D8/21
D661,561	S *	6/2012	Stinson	D8/29
8,393,252	B2 *	3/2013	Hsieh	B25B 13/465 81/63.2
8,707,489	B1 *	4/2014	Huhn	B25B 13/06 7/138
9,097,070	B2	8/2015	Hunter	
D811,192	S *	2/2018	Gehrung	D8/105
D880,262	S *	4/2020	Sims Sr.	D8/14
2013/0014616	A1 *	1/2013	Putsch	B25F 1/04 81/121.1
2018/0126518	A1 *	5/2018	Chan	B25B 13/005

* cited by examiner

Primary Examiner — Philip S Hyder
(74) *Attorney, Agent, or Firm* — Cramer Patent & Design, PLLC; Aaron R. Cramer

(57) **CLAIM**

The ornamental design for a universal choke wrench, as shown and described.

DESCRIPTION

FIG. **1** is a perspective top front right view of a universal choke wrench, showing my new design;
FIG. **2** is a perspective top rear left view thereof;
FIG. **3** is a front elevation view thereof;
FIG. **4** is a rear elevation view thereof;
FIG. **5** is a right elevation view thereof;
FIG. **6** is a left elevation view thereof;
FIG. **7** is a top plan view thereof; and,
FIG. **8** is a bottom plan view thereof.

1 Claim, 6 Drawing Sheets

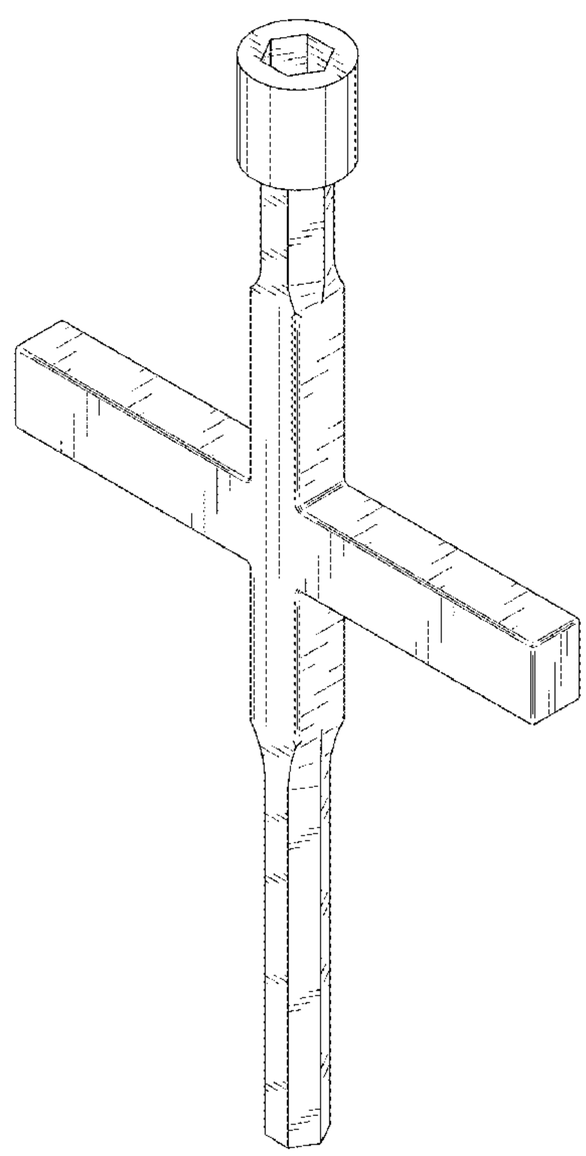

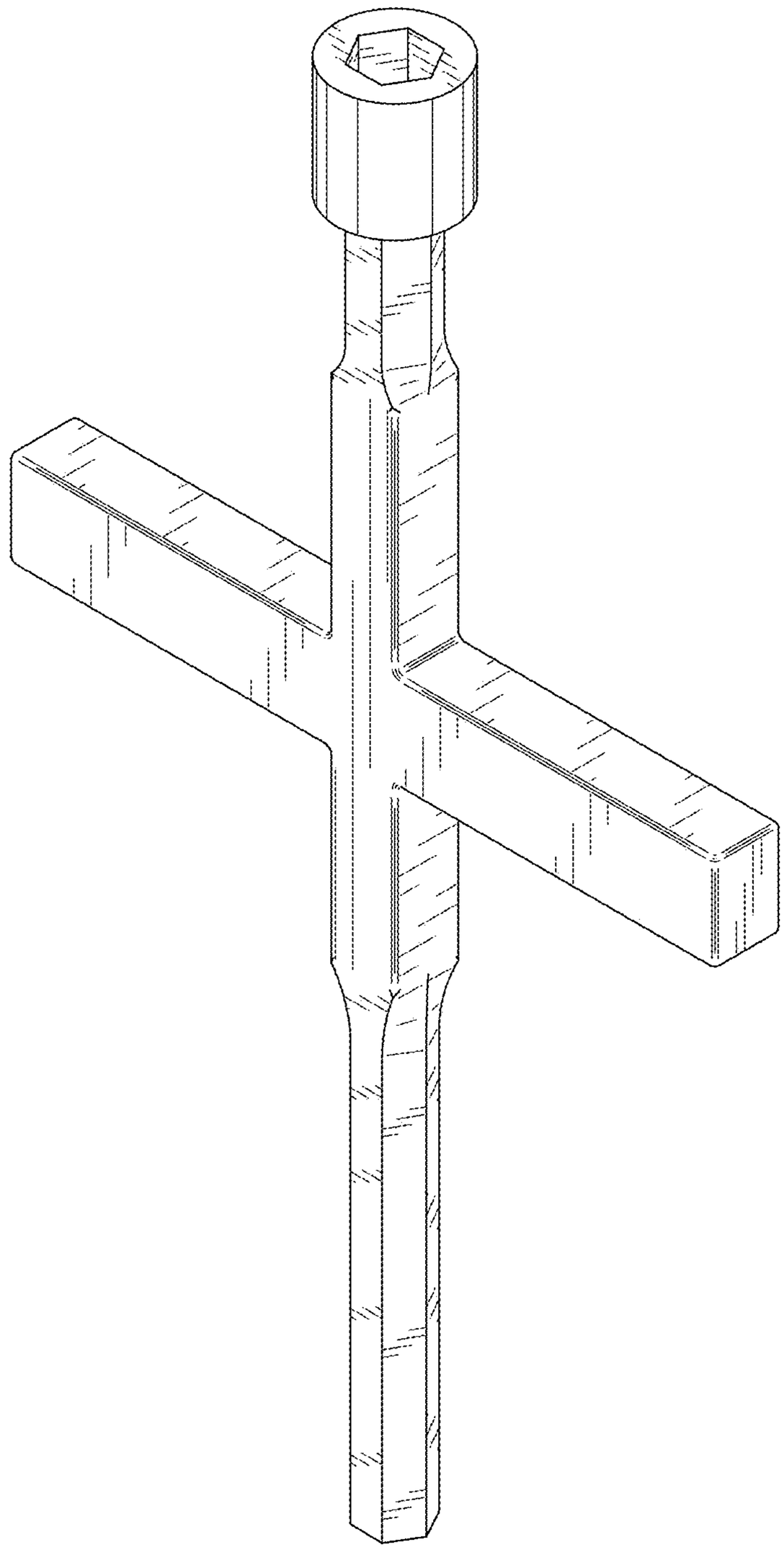

FIG. 1

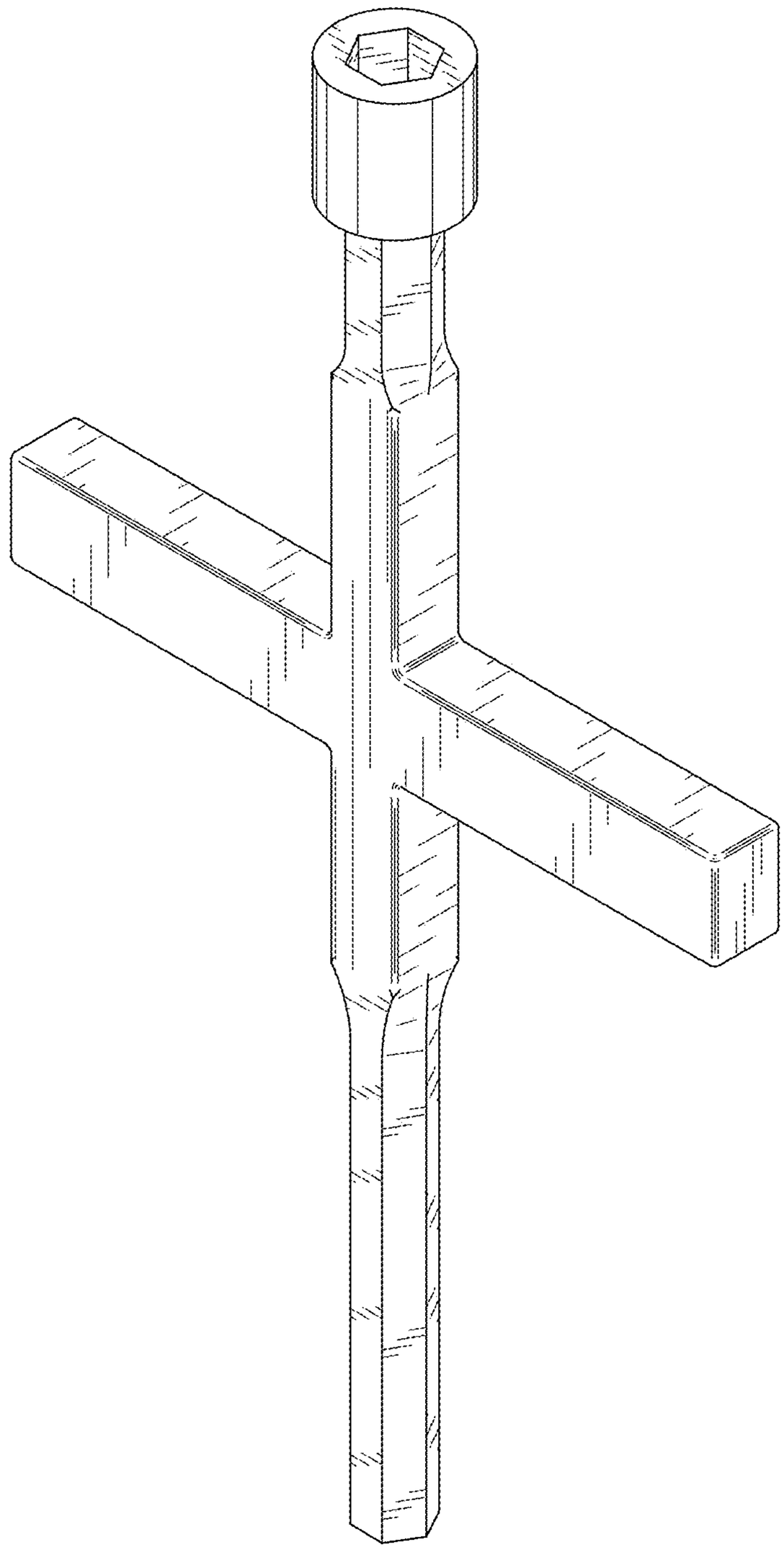

FIG. 2

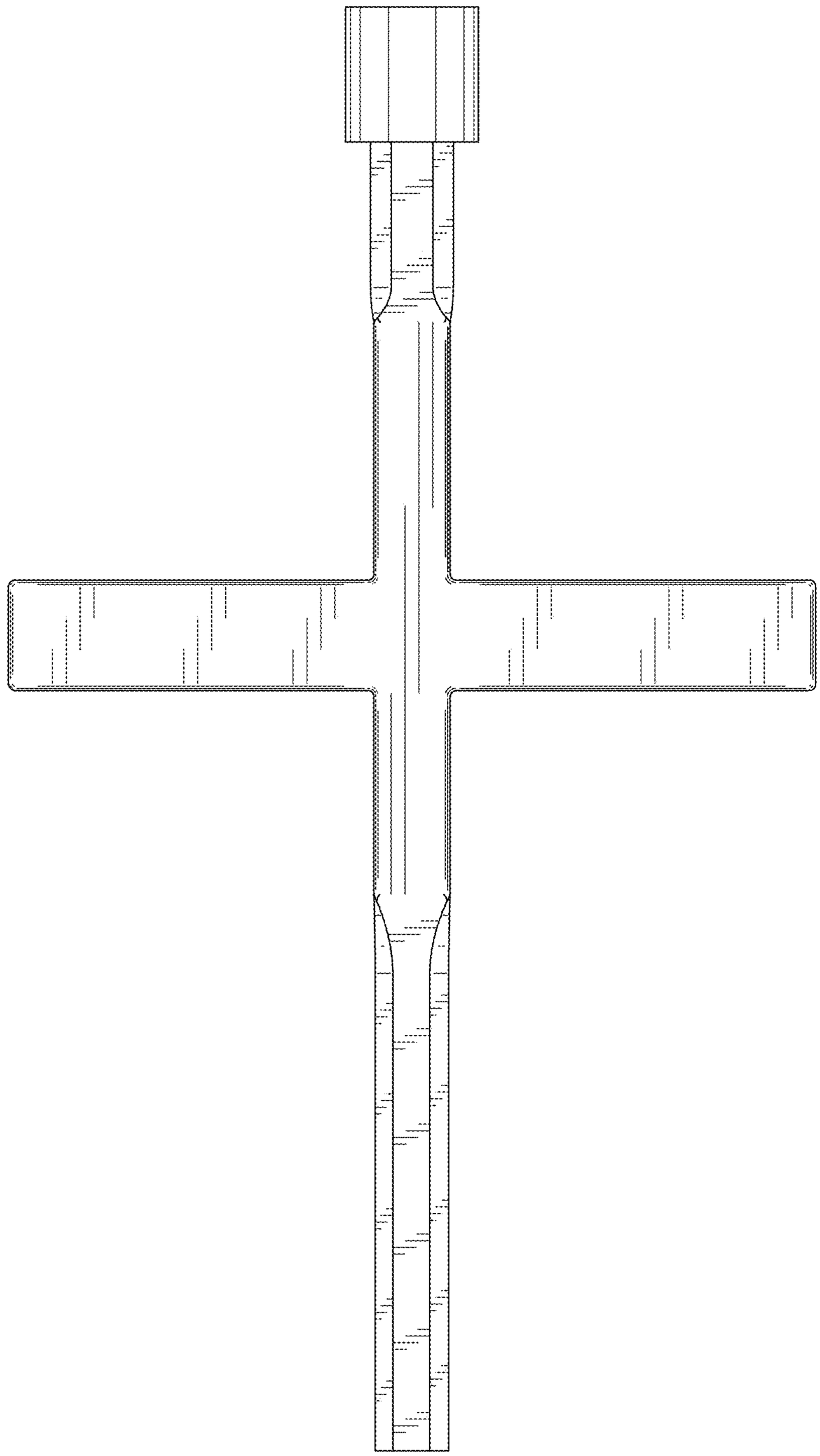

FIG. 3

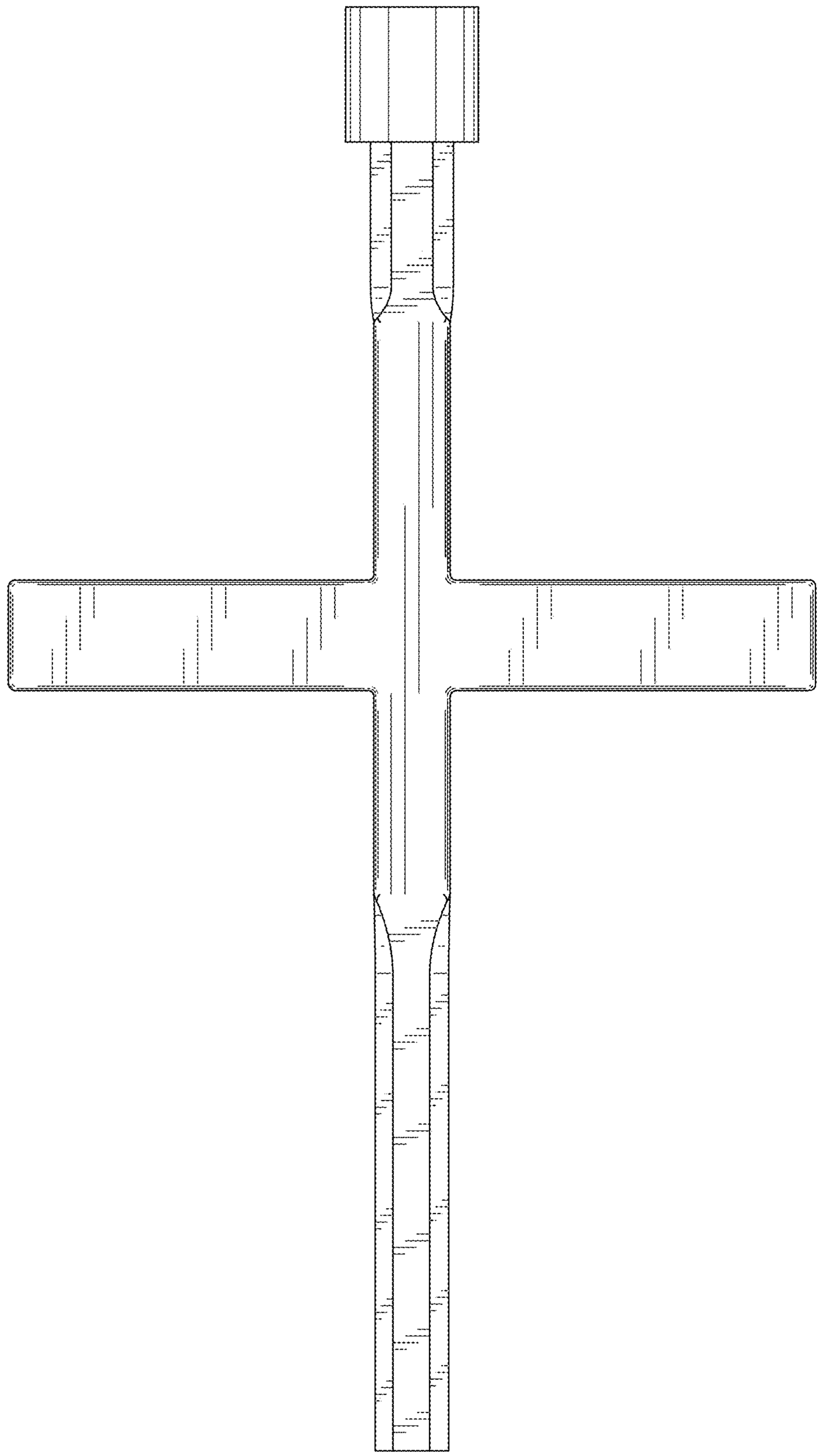

FIG. 4

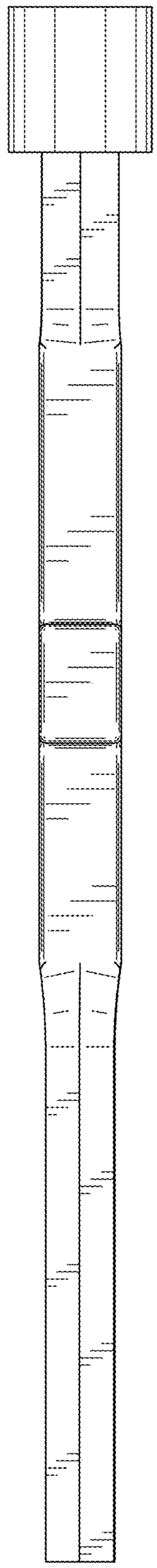

FIG. 5

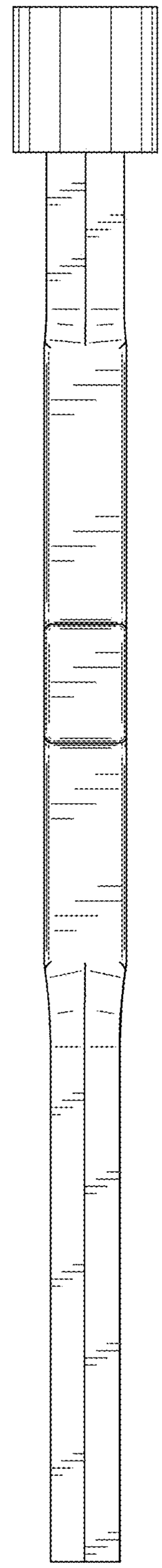

FIG. 6

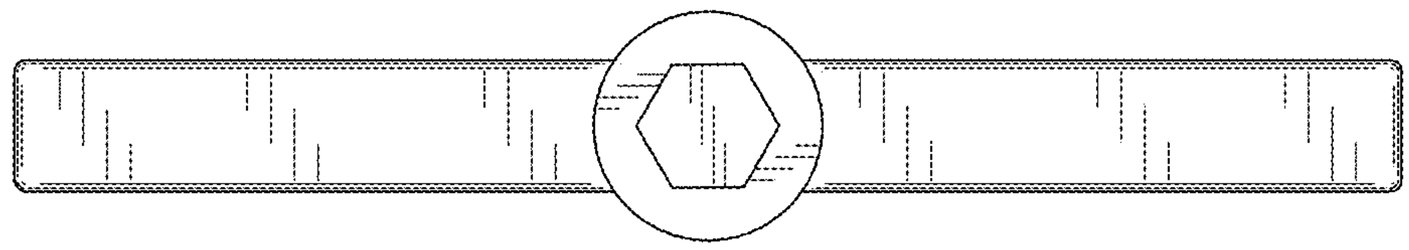

FIG. 7

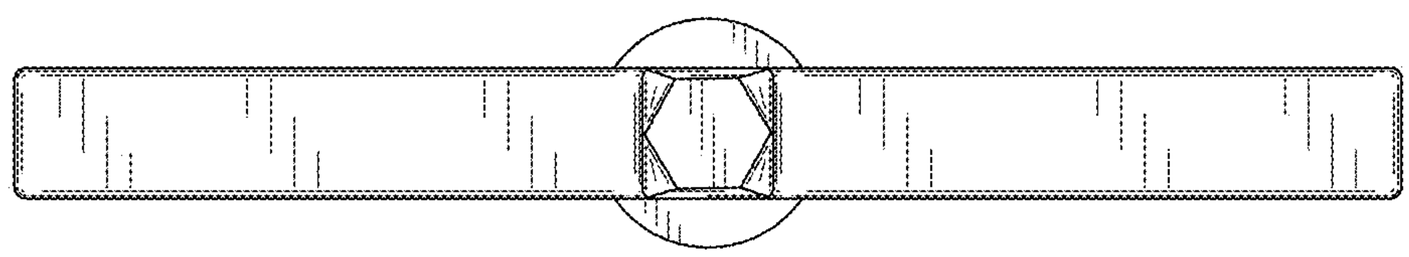

FIG. 8