US00D949504S

(12) United States Design Patent

Abbott

(10) Patent No.: US D949,504 S
(45) Date of Patent: ** Apr. 19, 2022

(54) **BEACH CLEANING STATION**

(71) Applicant: **Andrew Abbott**, Loxahatchee, FL (US)

(72) Inventor: **Andrew Abbott**, Loxahatchee, FL (US)

(**) Term: **15 Years**

(21) Appl. No.: **29/720,419**

(22) Filed: **Jan. 13, 2020**

(51) **LOC (13) Cl.** **09-09**

(52) **U.S. Cl.**
USPC **D34/10**

(58) **Field of Classification Search**
USPC D34/10, 11; D6/446, 167, 663
CPC E04B 1/34321; E04B 7/166; E04B 1/346; E04H 1/1205; A47B 17/04; A47B 47/03; A47B 67/02; A61G 7/1011; A61G 7/1017; A61G 7/1046; A61G 7/1021; A61G 5/1059; A61G 5/0858
See application file for complete search history.

(56) **References Cited**

U.S. PATENT DOCUMENTS

5,029,724 A * 7/1991 Serio B65D 55/14 220/322
5,044,644 A * 9/1991 Duran B65F 1/085 280/47.35
D329,516 S * 9/1992 Bailly D34/11
5,392,942 A * 2/1995 Hanson B65F 1/00 220/23.4
5,683,126 A * 11/1997 De Vivo B65F 1/1615 220/315
D688,806 S * 8/2013 Phillips D25/33
D689,622 S * 9/2013 Thuma D25/33
D728,824 S * 5/2015 McKimmy D25/33
D777,395 S * 1/2017 Rew D34/10
D799,775 S * 10/2017 Bowen D34/7

(Continued)

OTHER PUBLICATIONS

WPTV Article, New bucket station aims to keep Boynton beaches clean, Feb. 20, 2020, https://www.wptv.com/news/protecting-paradise/new-bucket-station-aims-to-keep-boynton-beach-beaches-clean (Year: 2020).*

(Continued)

Primary Examiner — Cynthia Ramirez
(74) *Attorney, Agent, or Firm* — McHale & Slavin, P.A.

(57) **CLAIM**

The ornamental design for a beach cleaning station, as shown and described.

DESCRIPTION

FIG. **1** is a perspective view of a beach cleaning station showing the first embodiment of my new design;
FIG. **2** is an alternate perspective view thereof;
FIG. **3** is a front view thereof;
FIG. **4** is a rear view thereof;
FIG. **5** is a left side view thereof;
FIG. **6** is a right side view thereof;
FIG. **7** is a top view thereof;
FIG. **8** is a bottom view thereof;
FIG. **9** is another perspective view thereof shown in use;
FIG. **10** is a perspective view of a beach cleaning station showing a second embodiment;
FIG. **11** is another perspective view thereof;
FIG. **12** is a front view thereof;
FIG. **13** is a rear view thereof;
FIG. **14** is a left side view thereof;
FIG. **15** is a right side view thereof;
FIG. **16** is a top view thereof;
FIG. **17** is a bottom view thereof; and,
FIG. **18** is another perspective view thereof shown in use.
The broken lines in the figures show portions of the beach cleaning station which form no part of the claimed design. The buckets shown in broken lines are to show environment purposes and form no part of the claimed design.

1 Claim, 18 Drawing Sheets

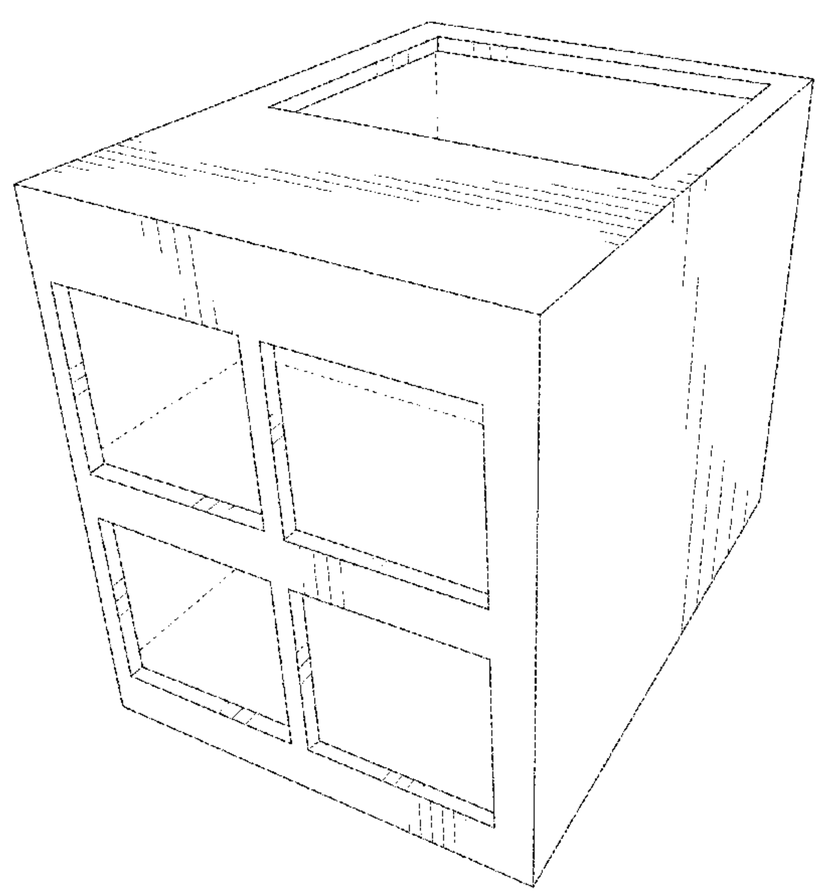

(56) **References Cited**

U.S. PATENT DOCUMENTS

D932,650	S *	10/2021	Leng	D25/33
2005/0005785	A1*	1/2005	Poss	B65F 1/1426 100/240
2007/0125778	A1*	6/2007	Uffner	B65F 1/1468 220/4.28
2010/0043309	A1*	2/2010	Martin	E03C 1/01 52/79.5
2013/0000218	A1*	1/2013	Uffner	E04B 1/34321 52/79.1
2014/0158702	A1*	6/2014	Phillips	A47B 47/042 220/832
2017/0190509	A1*	7/2017	Reeb	E05B 83/02
2018/0056336	A1*	3/2018	Castelli	B65F 1/004
2020/0263473	A1*	8/2020	Leng	A45C 5/00
2020/0263474	A1*	8/2020	Leng	A47B 67/00
2021/0123230	A1*	4/2021	Good	E04H 1/1205
2021/0245952	A1*	8/2021	Tassinari	A47D 13/00

OTHER PUBLICATIONS

Coastal Star article, Along the Coast: Nonprofit's buckets engage public in cleaning litter from beaches, Mar. 2021, https://thecoastalstar.com/profiles/blogs/along-the-coast-nonprofit-s-buckets-engage-public-in-cleaning-lit (Year: 2021).*

* cited by examiner

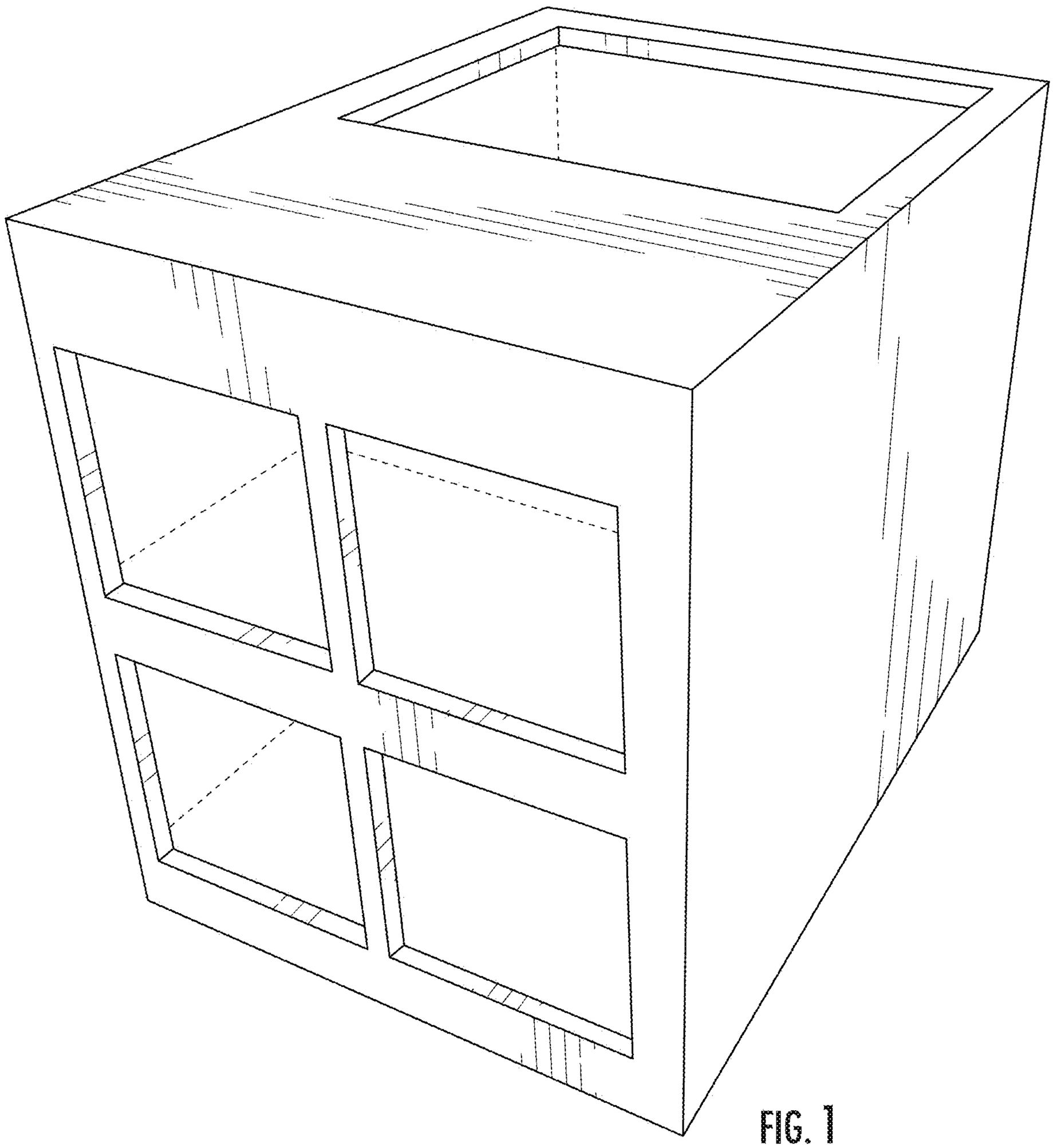

FIG. 1

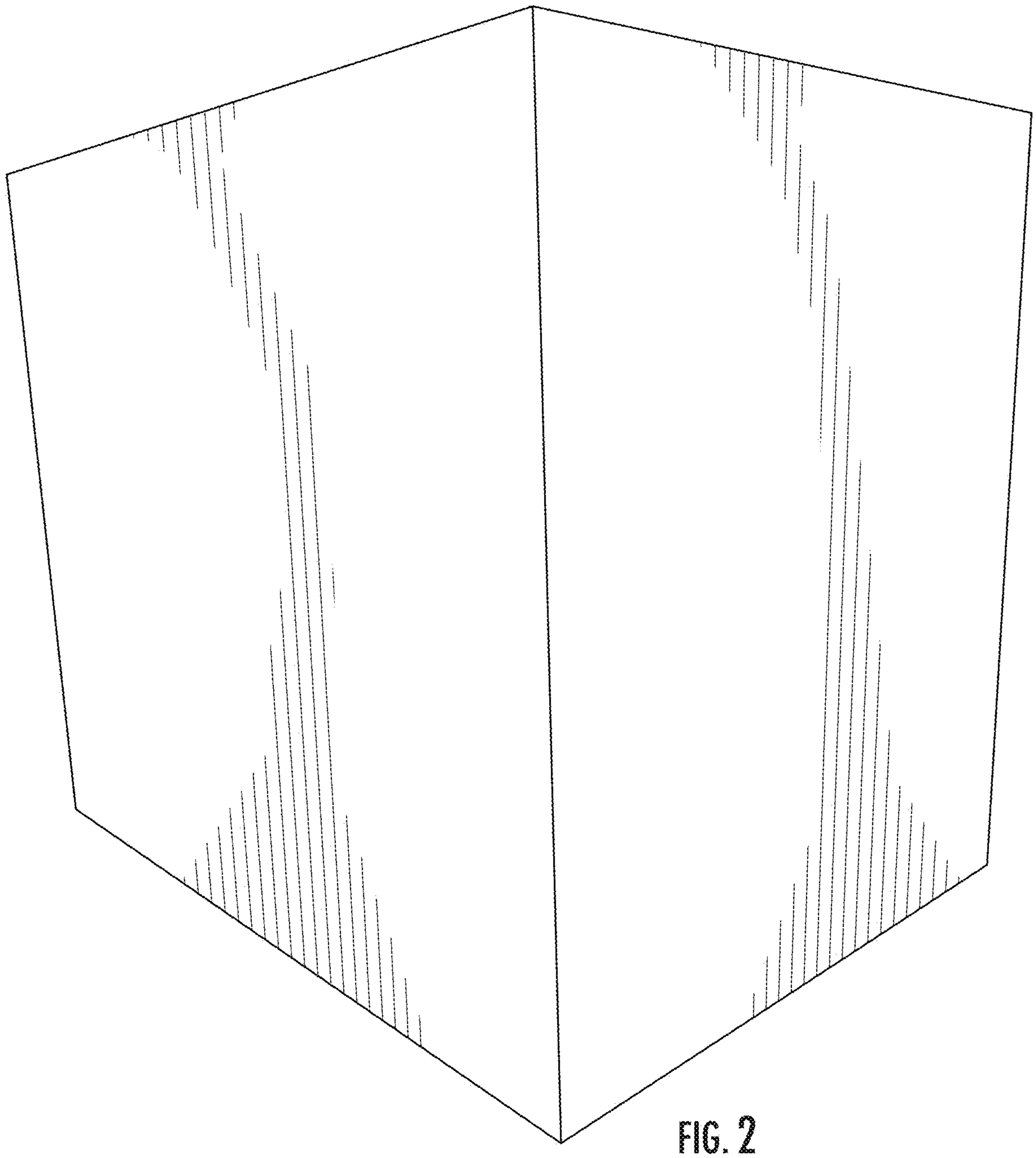

FIG. 2

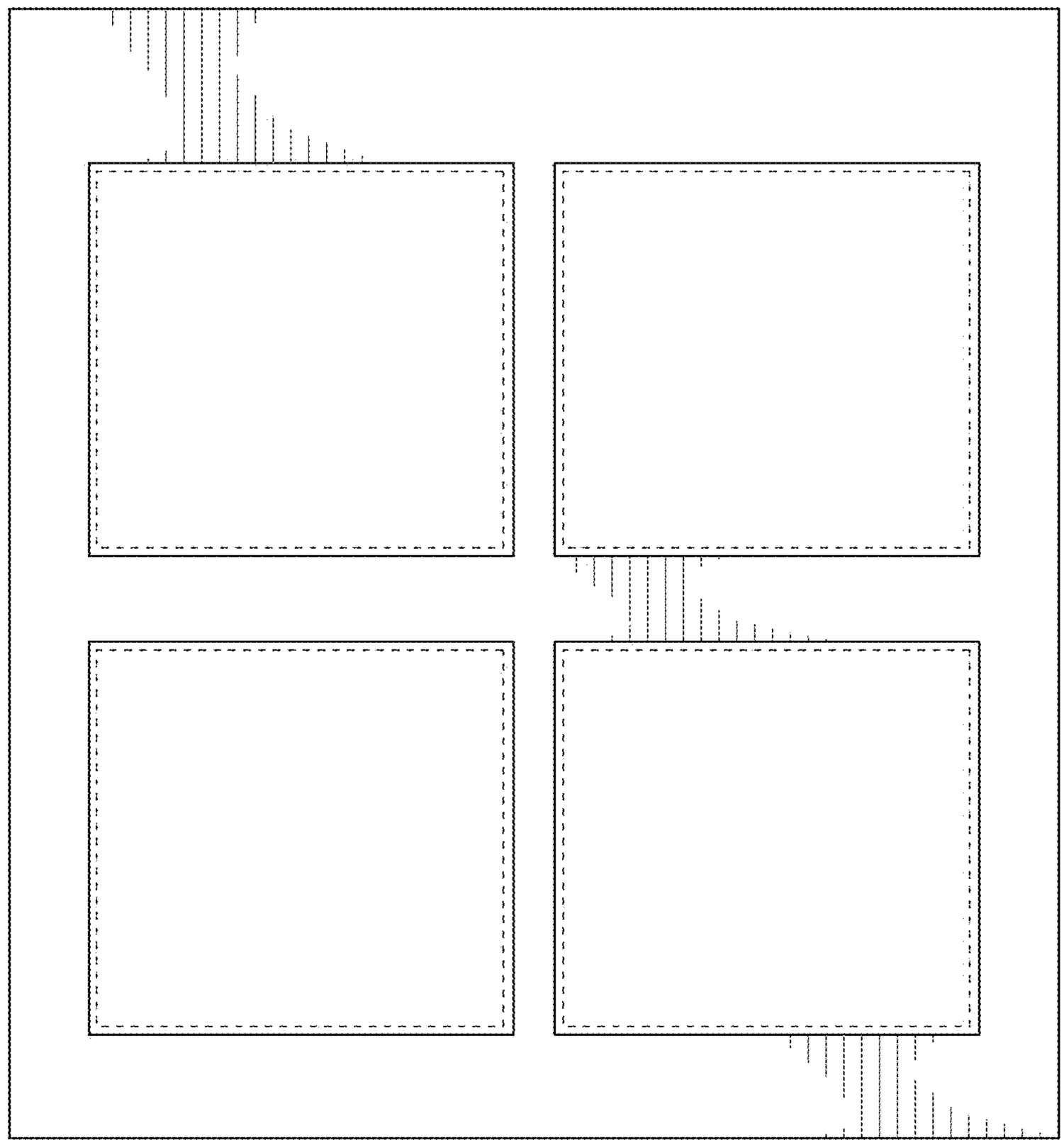

FIG. 3

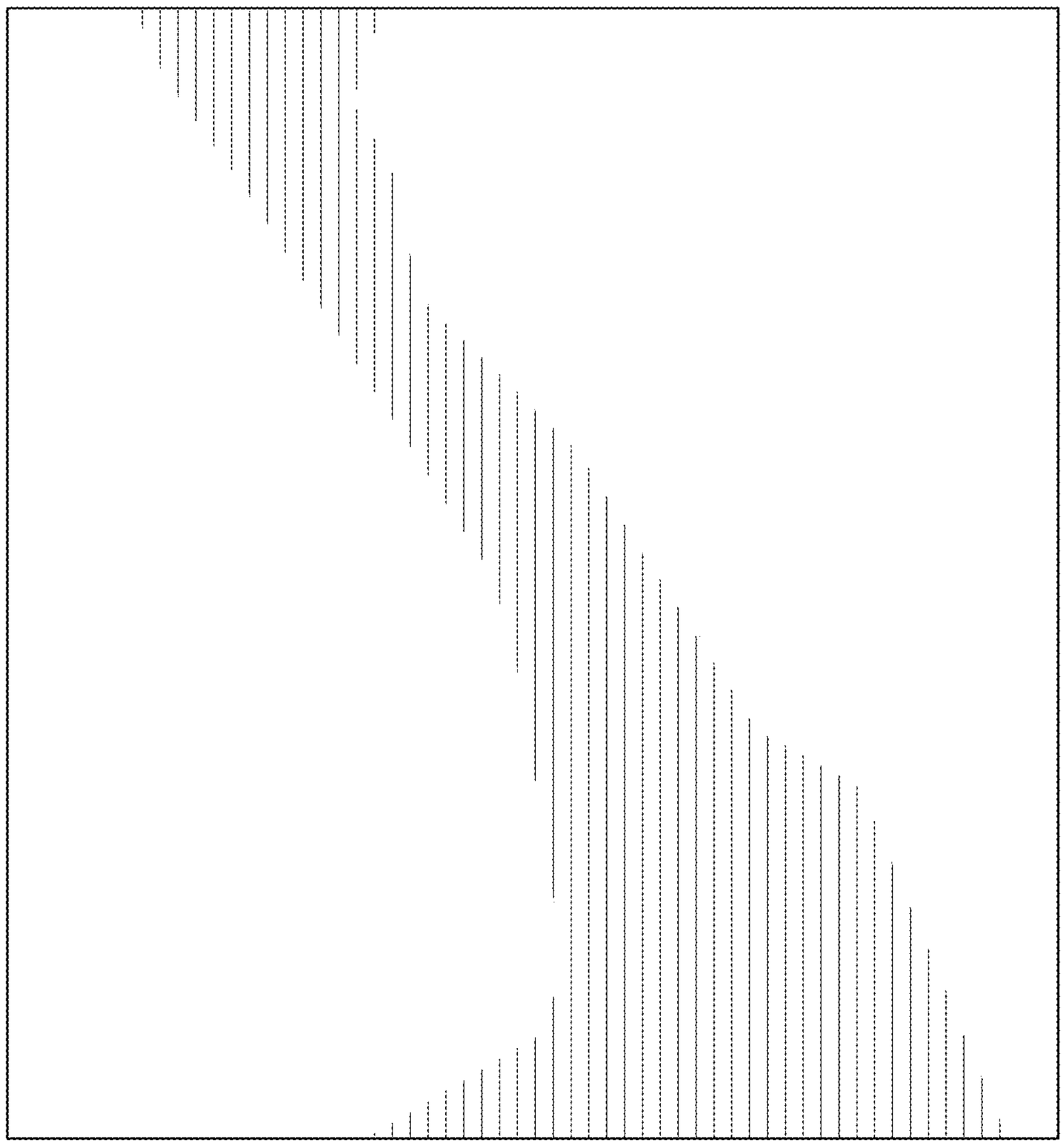

FIG. 4

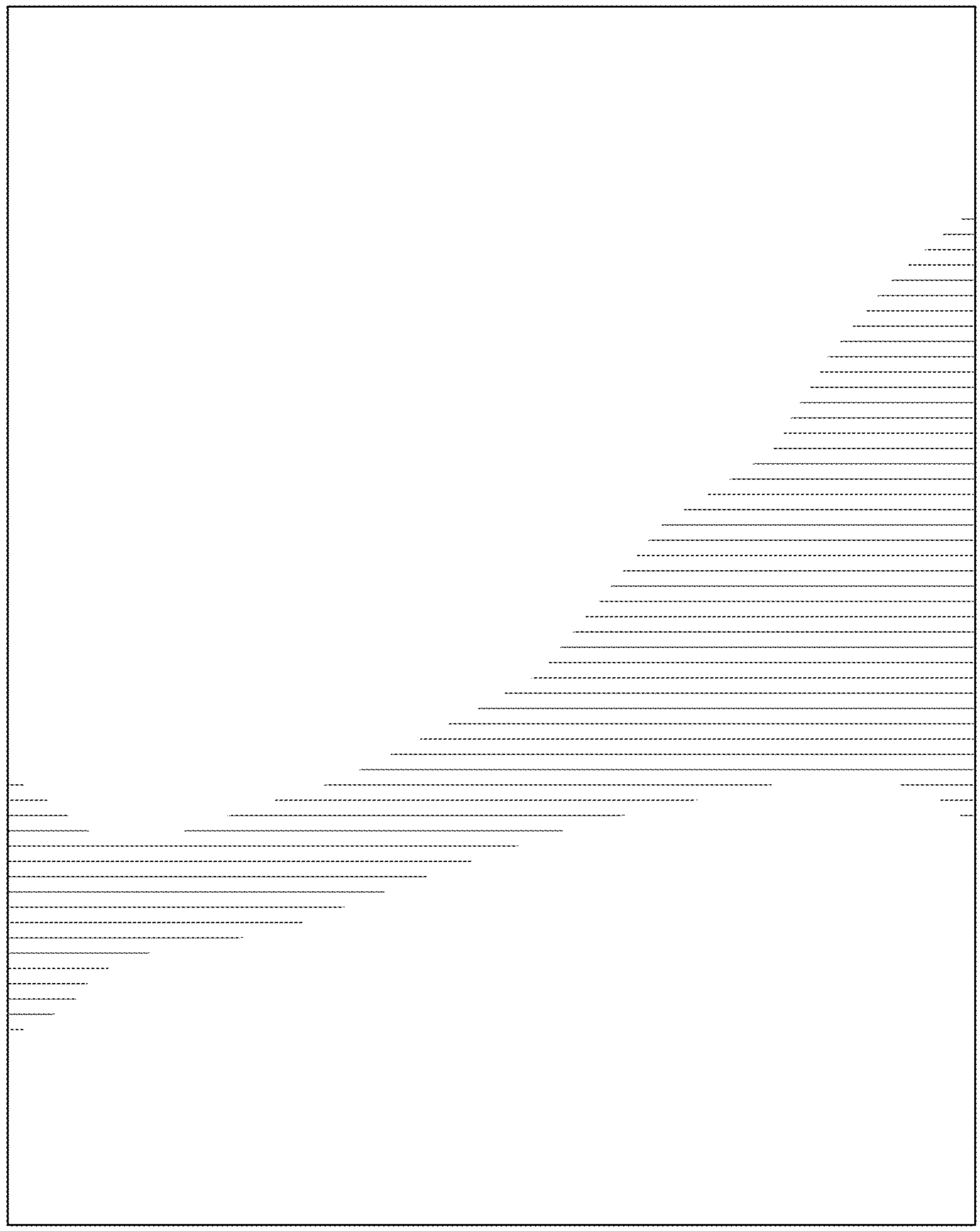

FIG. 5

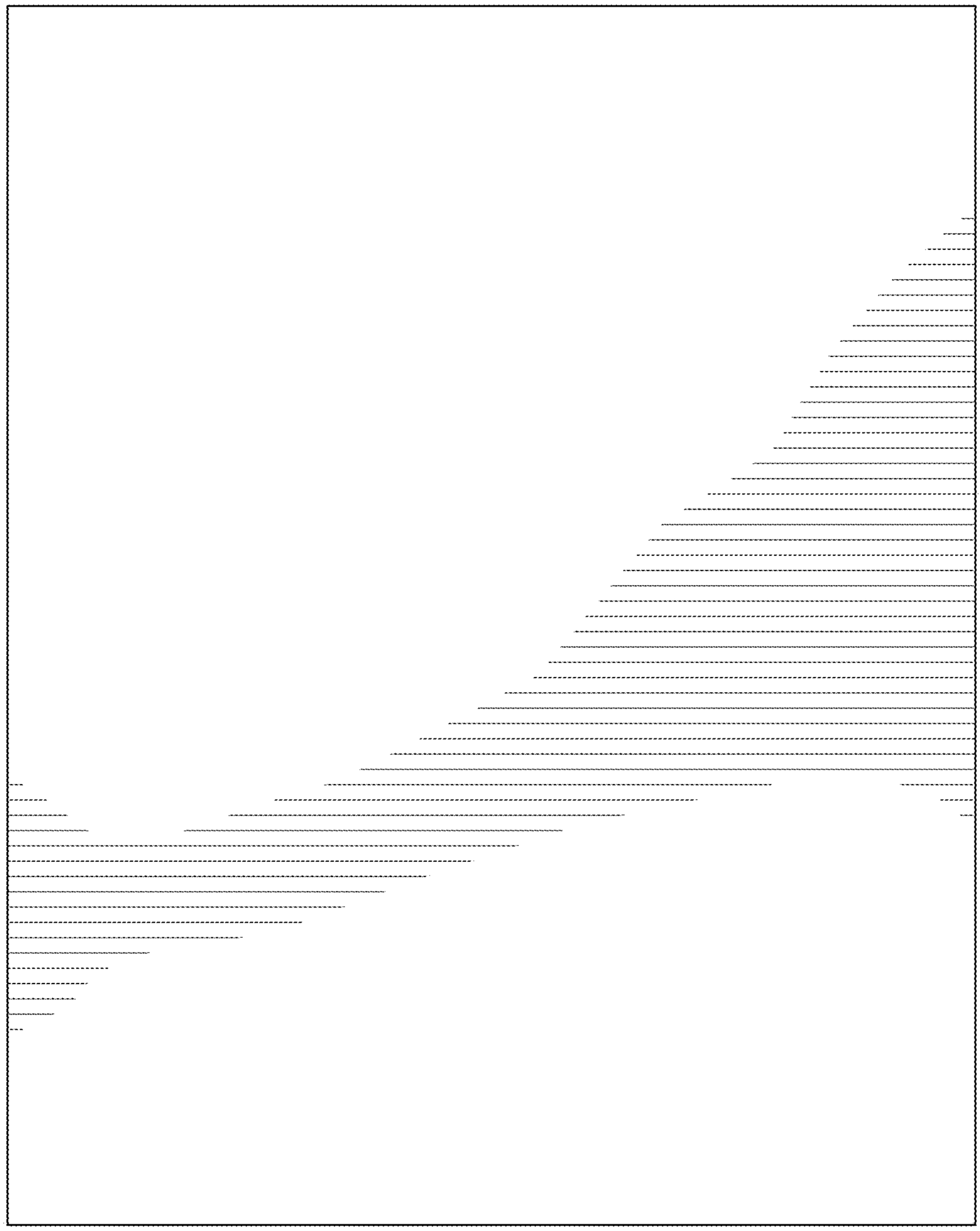

FIG. 6

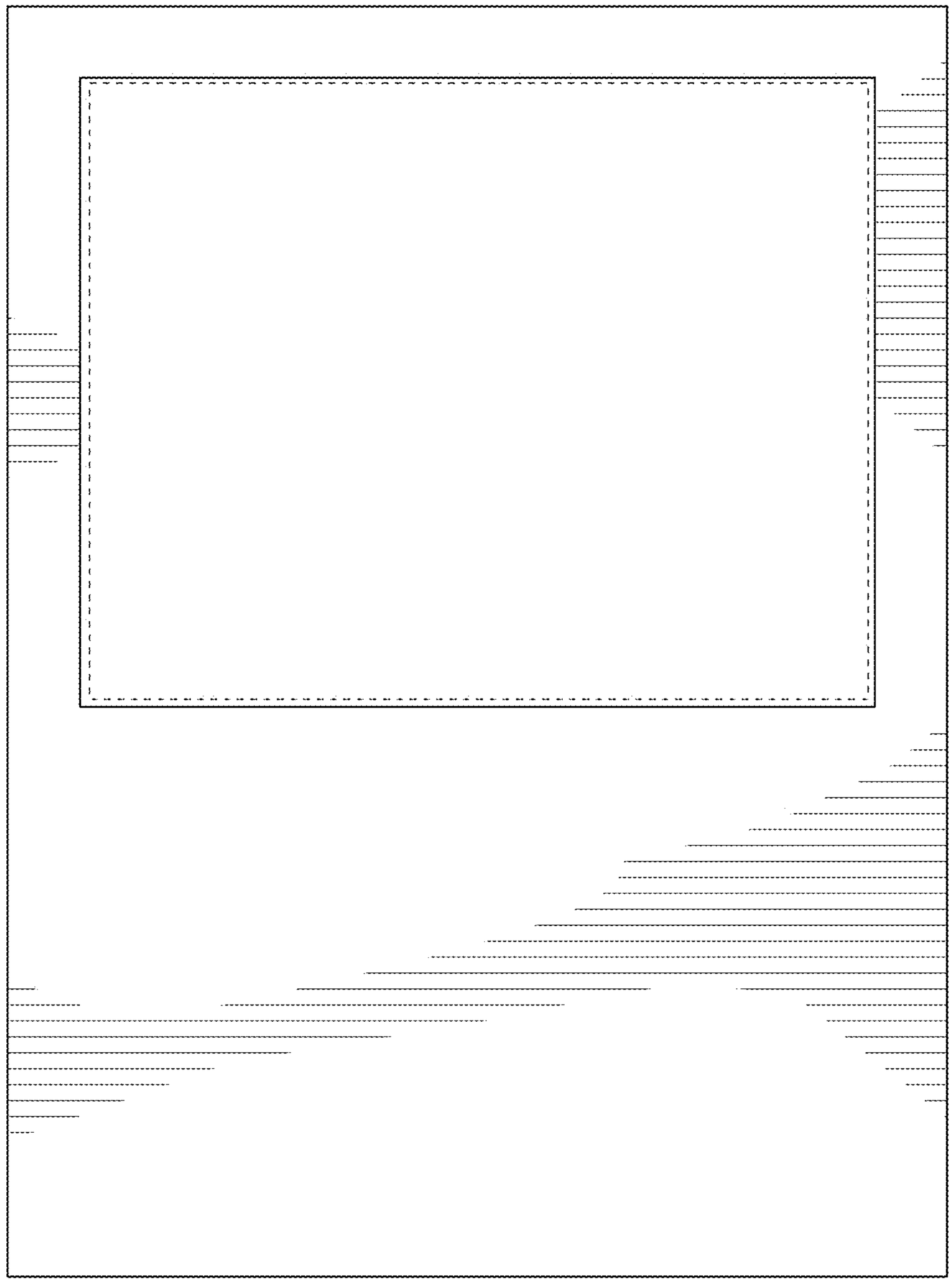

FIG. 7

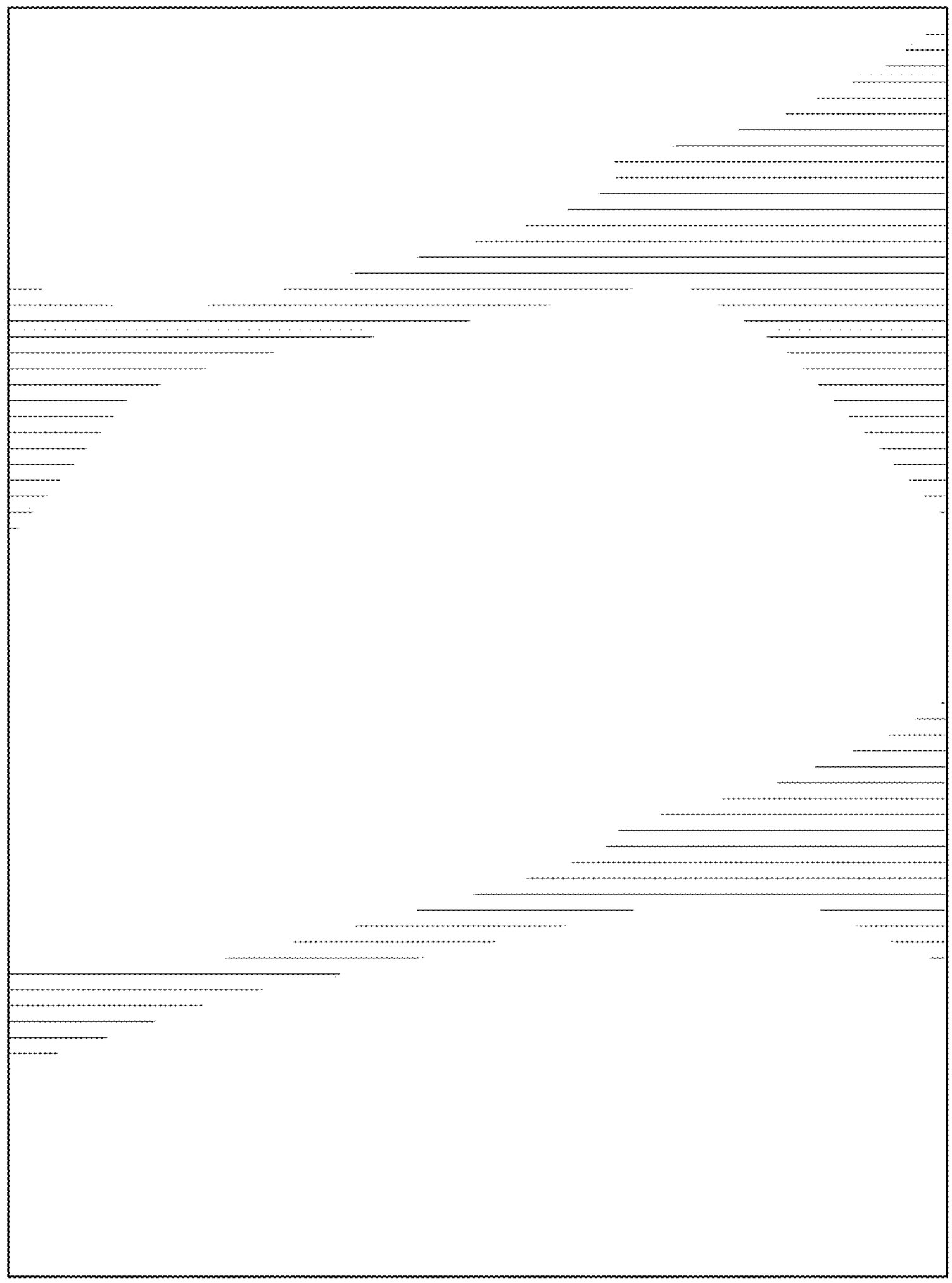

FIG. 8

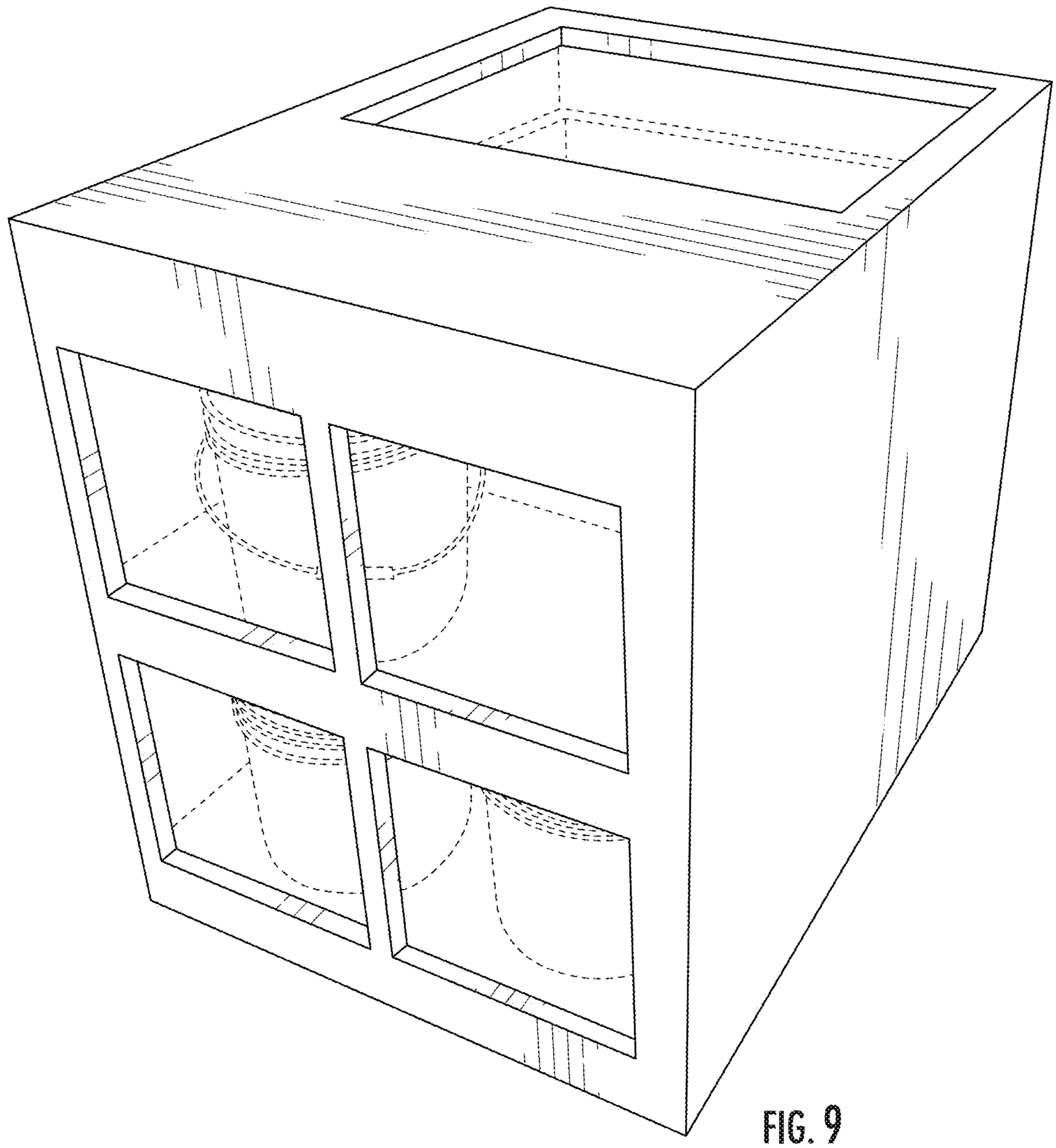

FIG. 9

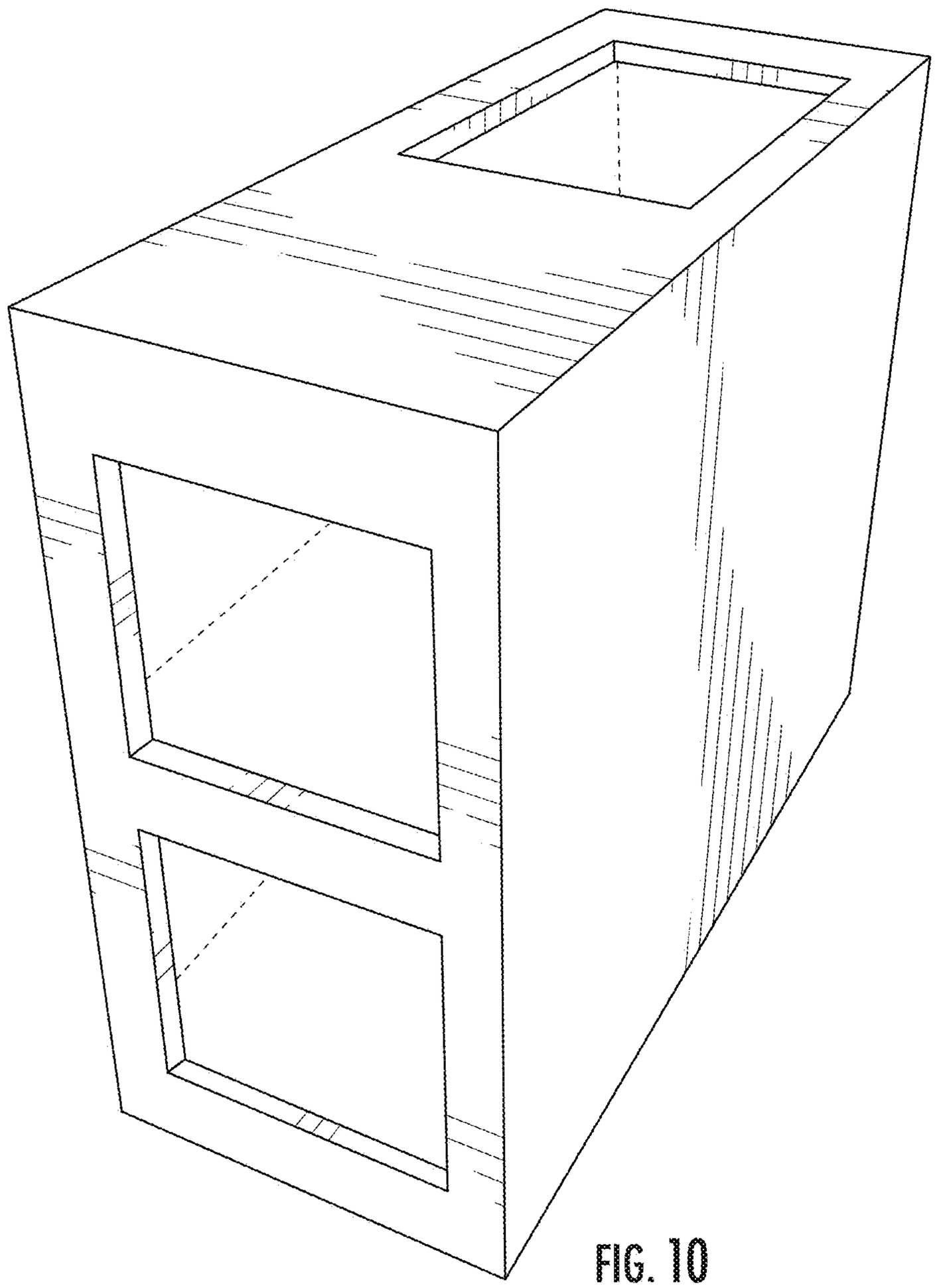

FIG. 10

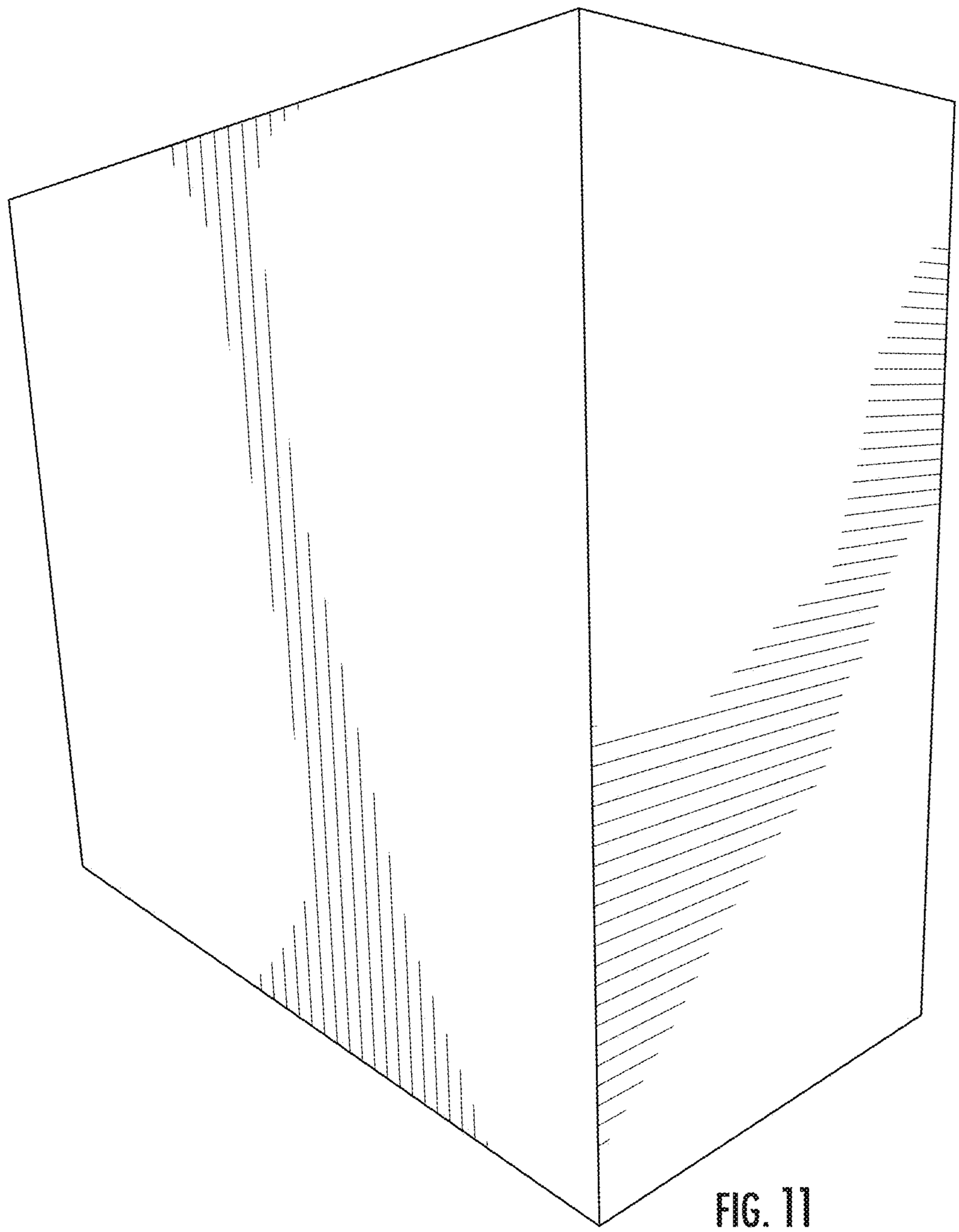

FIG. 11

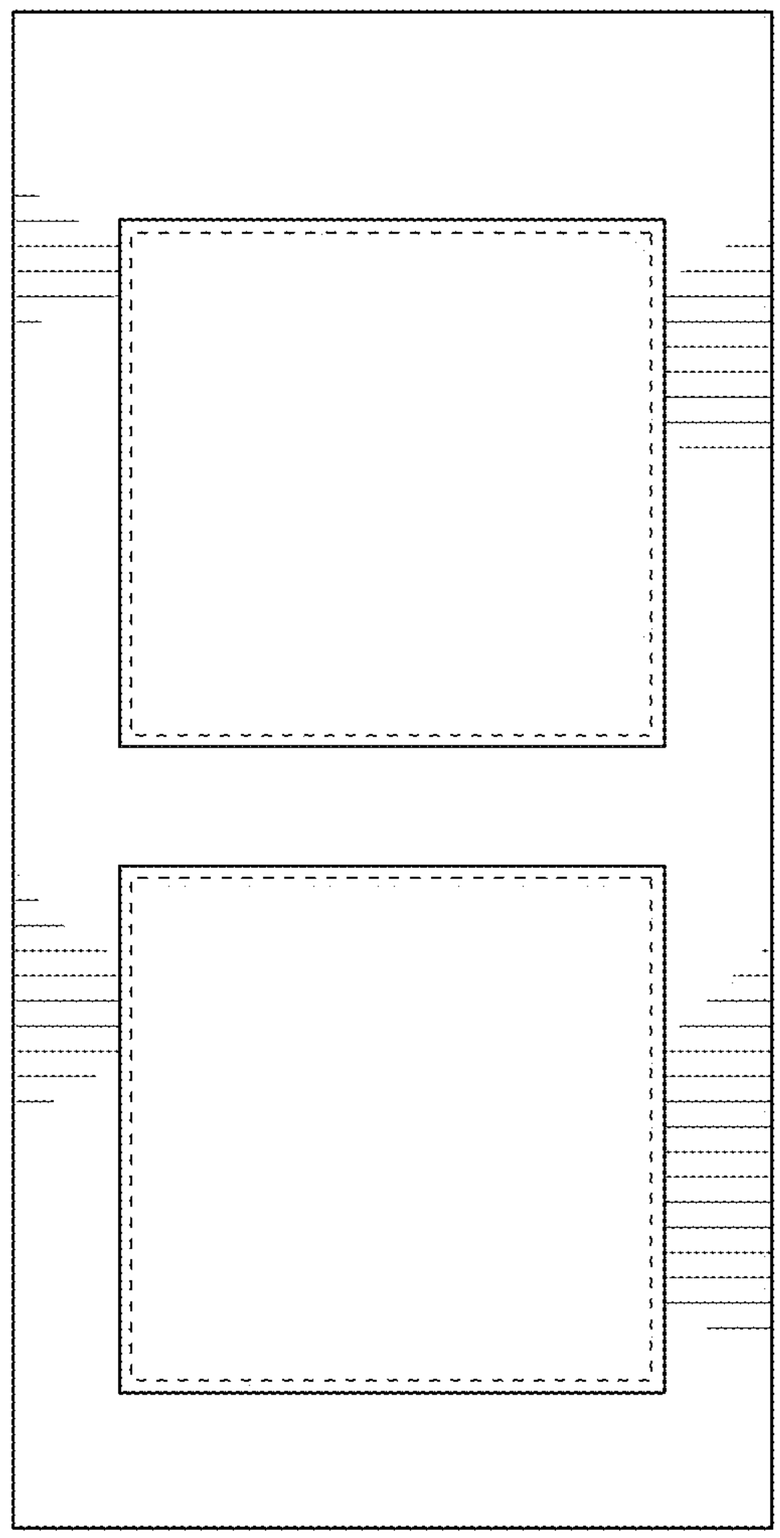

FIG. 12

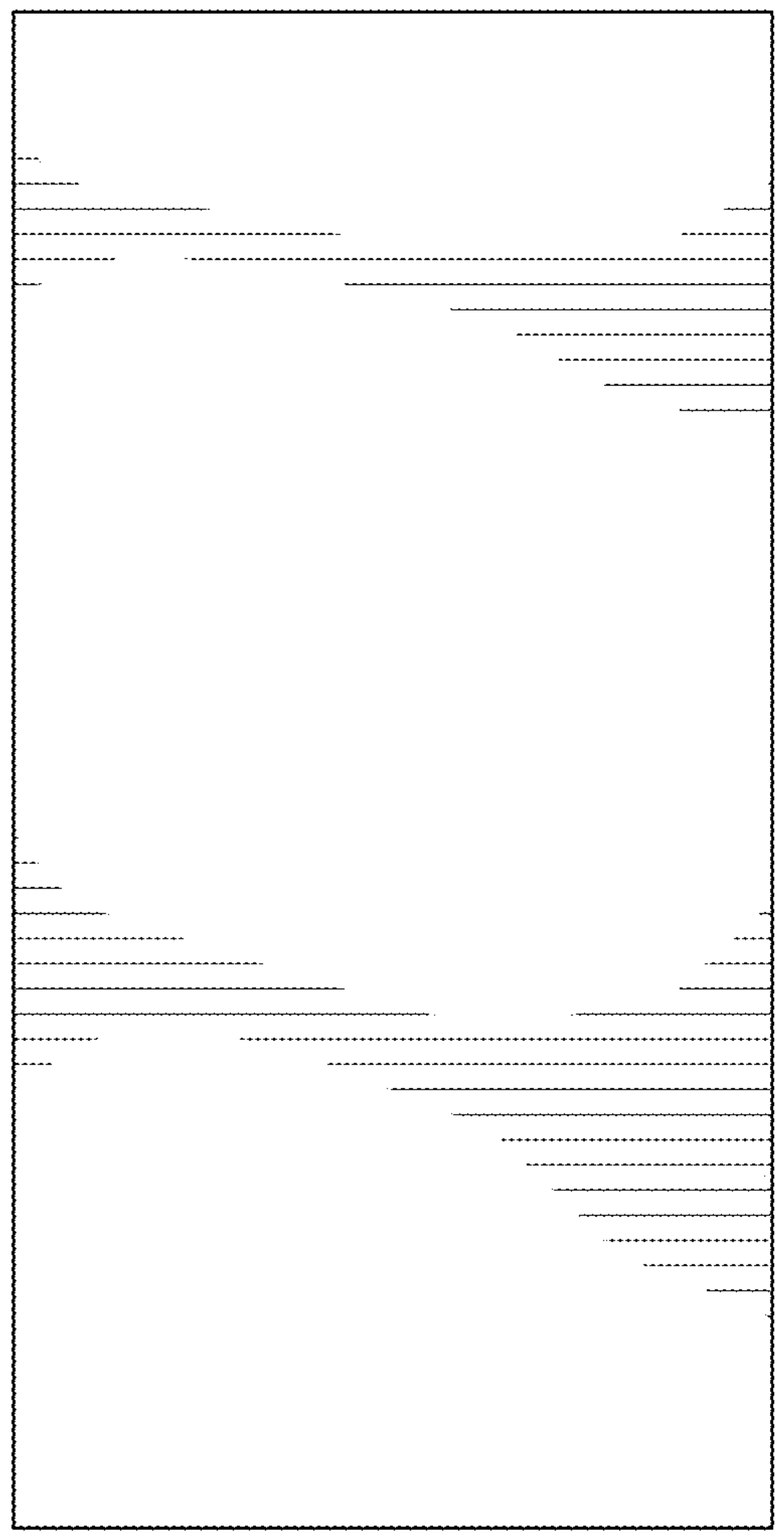

FIG. 13

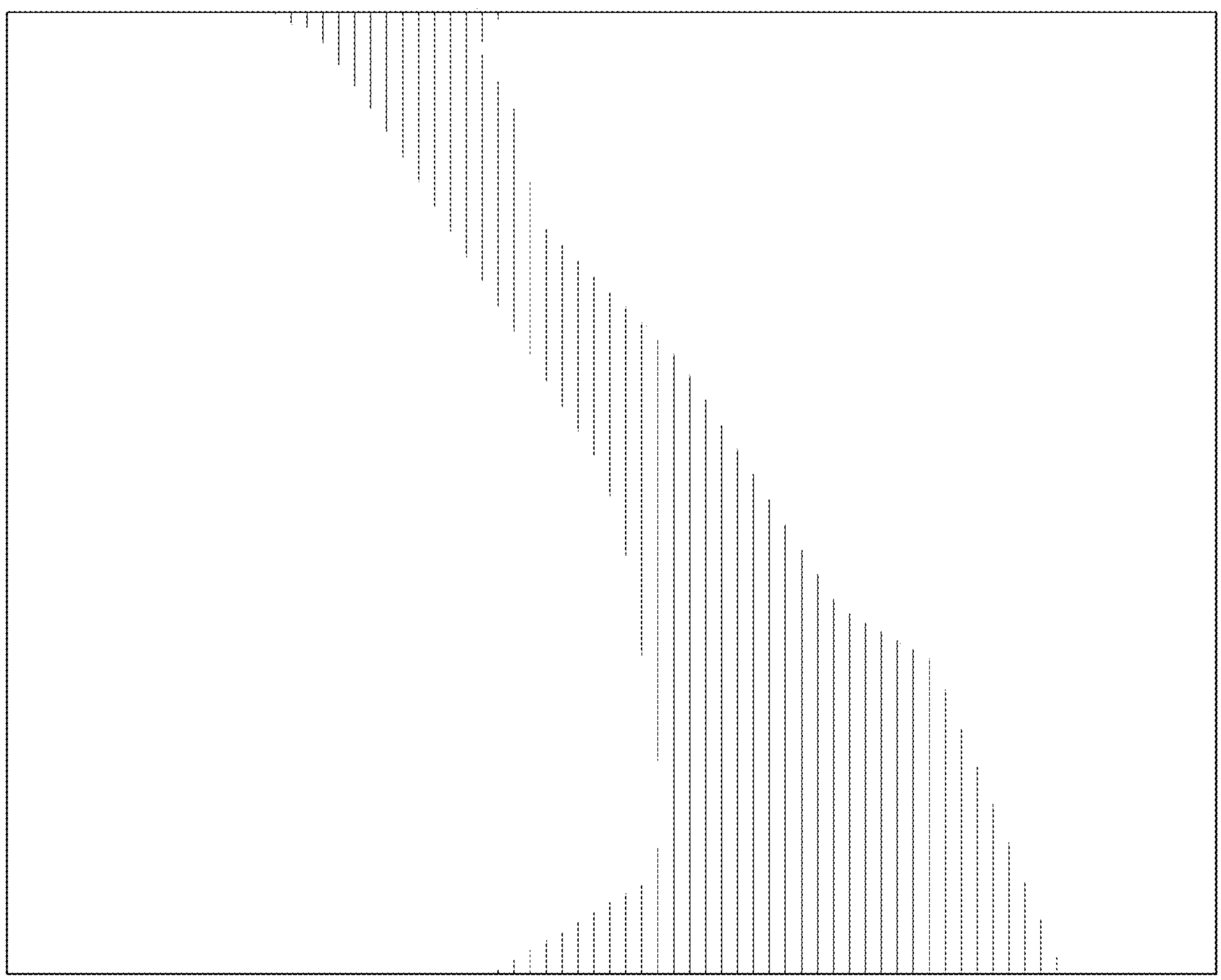

FIG. 14

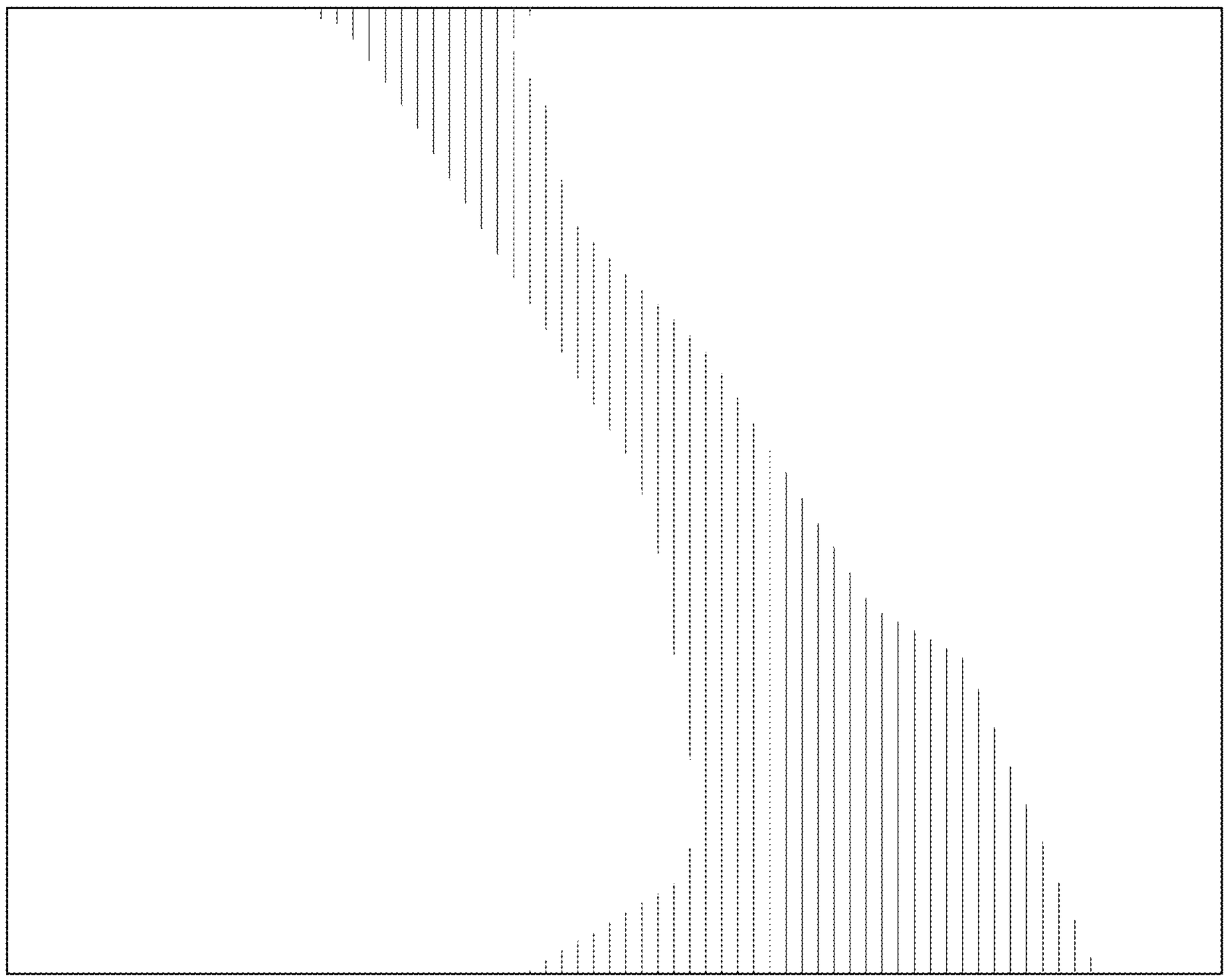

FIG. 15

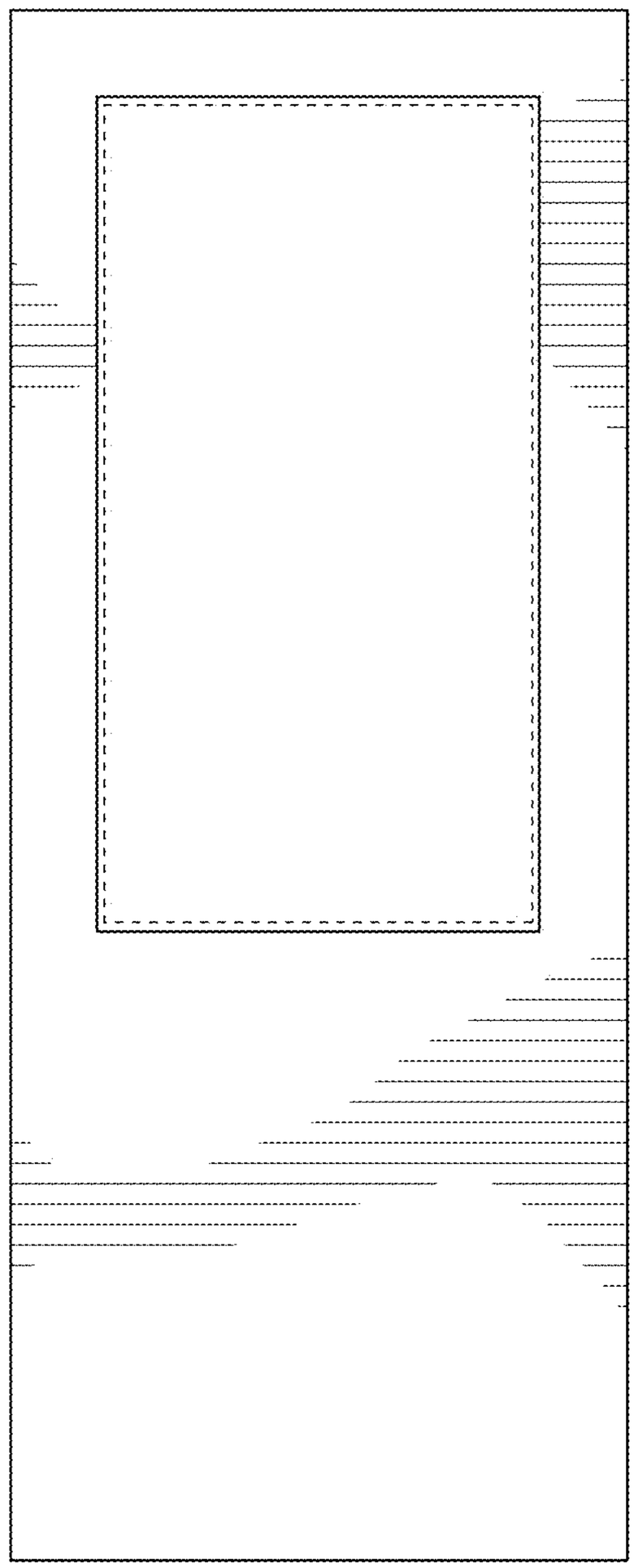

FIG. 16

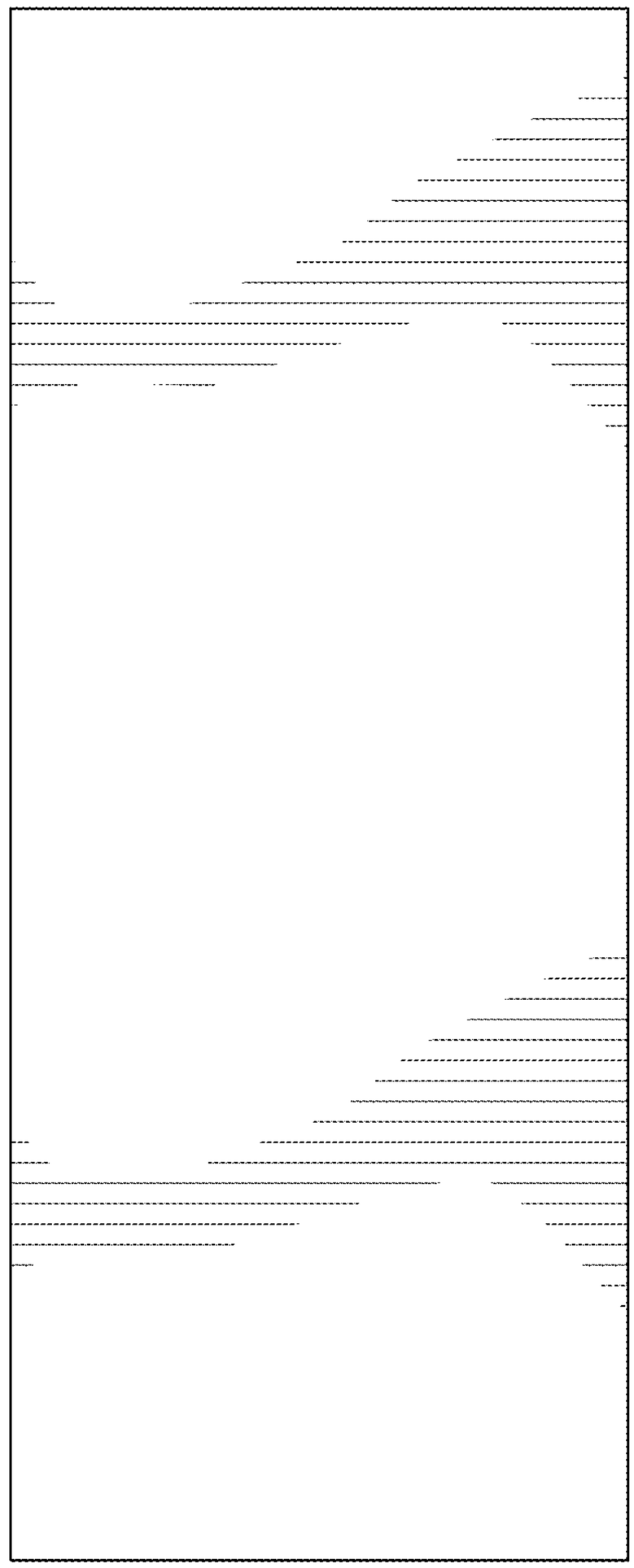

FIG. 17

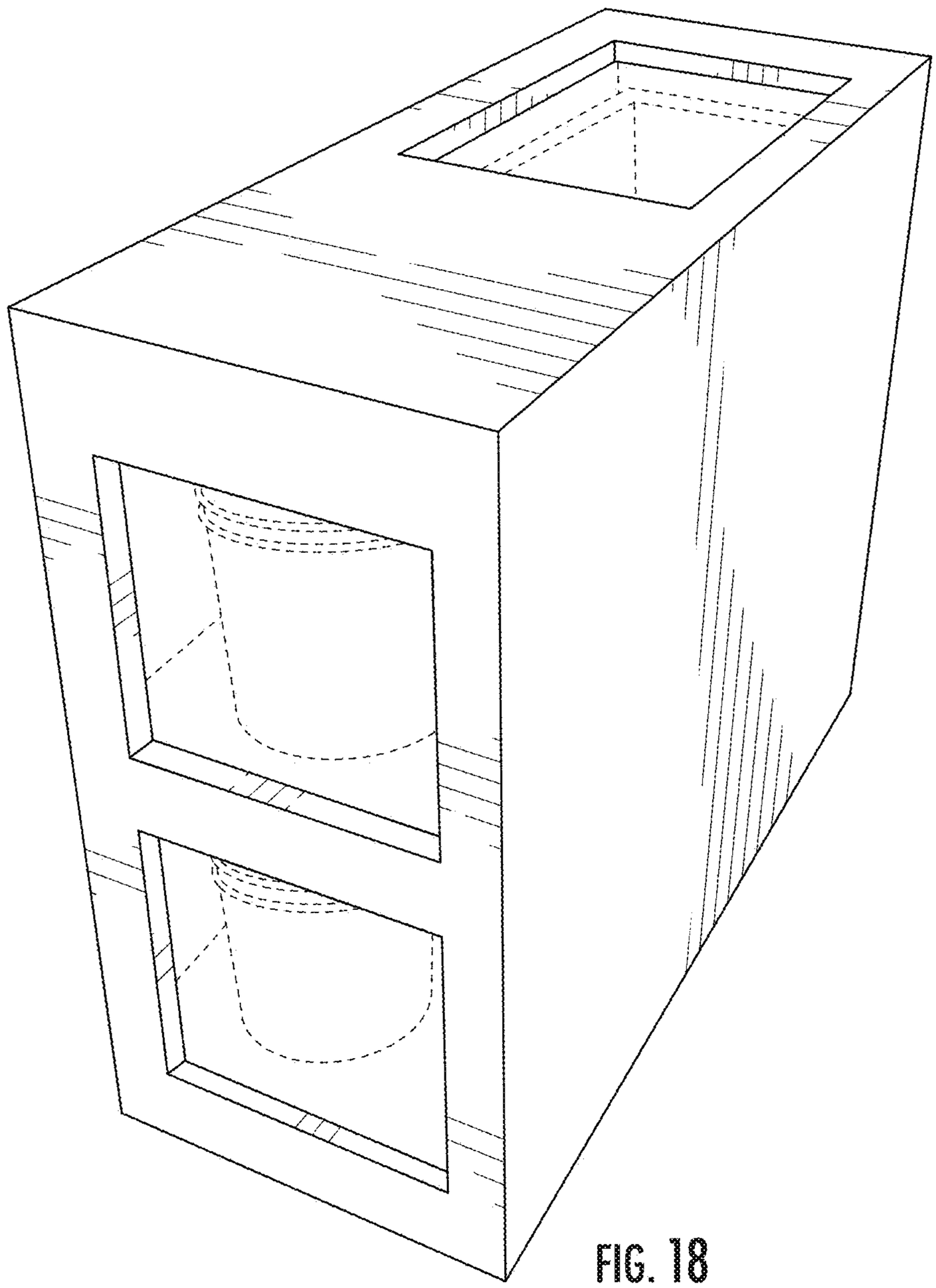

FIG. 18