US00D949417S

(12) United States Design Patent

Khubani et al.

(10) Patent No.: US D949,417 S
(45) Date of Patent: ** Apr. 19, 2022

(54) **ATTACHMENT TO AN ELECTRICAL STIMULATION DEVICE**

(71) Applicant: **Health Bloom, LLC**, Miami Beach, FL (US)

(72) Inventors: **Ajit Khubani**, Saddle River, NJ (US); **Damian Mucaro**, Hackensack, NJ (US); **Paul Dowd**, Scarsdale, NJ (US)

(73) Assignee: **Health Bloom, LLC**, Miami Beach, FL (US)

(**) Term: **15 Years**

(21) Appl. No.: **29/756,870**

(22) Filed: **Oct. 30, 2020**

(51) **LOC (13) Cl.** **28-03**

(52) **U.S. Cl.**
USPC **D24/215**

(58) **Field of Classification Search**
USPC D24/200, 209, 211, 212, 213, 214, 215; D7/393; D8/307, 310, 378; D9/435, 439
CPC . A61H 2201/0119; A61H 7/002; A61H 7/007
See application file for complete search history.

(56) **References Cited**

U.S. PATENT DOCUMENTS

3,716,163	A	*	2/1973	Marcel	B65D 39/0017 215/320
D285,116	S	*	8/1986	Hoff	D24/214
D334,332	S	*	3/1993	Massey	D8/107
D362,307	S	*	9/1995	Cirone	D24/211
D368,638	S	*	4/1996	Sonnenleiter	D8/310
D403,584	S	*	1/1999	Bakic	D9/454
D427,507	S	*	7/2000	Huang	D8/378
D432,399	S	*	10/2000	Xu	D8/378
D433,620	S	*	11/2000	Xu	D8/378
D444,882	S	*	7/2001	Chen	D24/211
D444,883	S	*	7/2001	Chen	D24/211
D449,695	S	*	10/2001	Ponton	D24/200
D481,132	S		10/2003	Kim	
D489,979	S	*	5/2004	Bourg	D9/439
D495,599	S	*	9/2004	Biesecker	D7/391
D540,947	S		4/2007	Jung et al.	
D556,332	S		11/2007	Han	
D575,639	S	*	8/2008	Seeuwen	D9/439
D580,756	S	*	11/2008	Seebold	D9/439
D592,036	S	*	5/2009	Domin	D8/307
D592,484	S	*	5/2009	Ricereto	D8/307
D600,177	S	*	9/2009	Komiyama	D12/179

(Continued)

OTHER PUBLICATIONS

[No Author Listed], Acupuncture Pen. Amazon.com. Retrieved from the Internet Oct. 26, 2020: https://www.amazon.com/s?k=acupuncture+pen&crid=2QHKSW94LL . . . 1 page.

(Continued)

Primary Examiner — Michael A Maharajh
(74) *Attorney, Agent, or Firm* — Wolf, Greenfield & Sacks, P.C.

(57) **CLAIM**

The ornamental design for an attachment to an electrical stimulation device, as shown and described.

DESCRIPTION

FIG. **1** is a top, front, left side perspective view of an attachment to an electrical stimulation device according to our new design;
FIG. **2** is a left side elevation view thereof;
FIG. **3** is a right side elevation view thereof;
FIG. **4** is a front elevation view thereof;
FIG. **5** is a rear elevation view thereof;
FIG. **6** is a top plan view thereof; and,
FIG. **7** is a bottom plan view thereof.

1 Claim, 7 Drawing Sheets

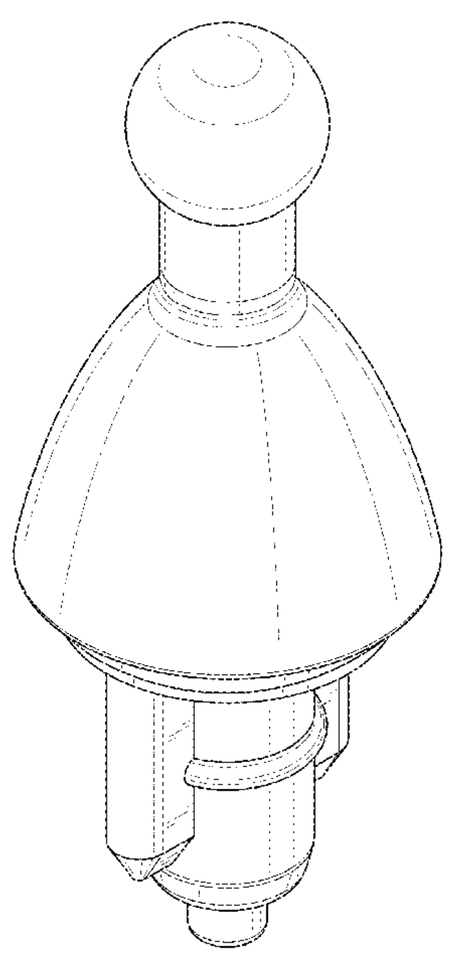

(56) **References Cited**

U.S. PATENT DOCUMENTS

D627,898	S	*	11/2010	Aulwes	D24/214
D628,304	S	*	11/2010	Aulwes	D24/214
D639,657	S	*	6/2011	Hoyt	D9/439
D679,982	S	*	4/2013	Ramsland	D8/312
D715,955	S	*	10/2014	Hsu	A61H 19/00 D24/215
D716,465	S	*	10/2014	Kanbar	A61H 19/40 D24/215
D729,063	S	*	5/2015	Koop	D9/439
D735,853	S	*	8/2015	Pa	D24/129
D771,468	S	*	11/2016	Gallagher	D8/307
D791,958	S	*	7/2017	Ho	D24/200
D799,945	S	*	10/2017	Sotto	D8/373
D799,946	S	*	10/2017	Sotto	D8/373
D818,600	S	*	5/2018	Black	D24/214
D819,825	S	*	6/2018	Black	D24/214
D820,992	S	*	6/2018	King	D24/200
D823,478	S	*	7/2018	Park	D24/215
D825,067	S	*	8/2018	Ho	D24/200
D830,568	S	*	10/2018	Black	D24/214
D833,029	S	*	11/2018	Guenst	D24/215
D837,395	S	*	1/2019	Gan	D24/214
D845,499	S	*	4/2019	Wersland	D24/211
D845,500	S	*	4/2019	Wersland	D24/211
D849,260	S	*	5/2019	Wersland	D24/211
D849,261	S	*	5/2019	Wersland	D24/211
D850,639	S	*	6/2019	Wersland	D24/211
D850,640	S	*	6/2019	Wersland	D24/211
D859,680	S	*	9/2019	Wersland	D24/211
D865,192	S	*	10/2019	Nazarian	D24/200
D865,987	S	*	11/2019	Jacobs	D24/214
D872,295	S	*	1/2020	Friedman	D24/215
D883,074	S	*	5/2020	Roe	D8/378
D890,353	S	*	7/2020	Nazarian	D24/200
D890,942	S	*	7/2020	Wersland	D24/211
D890,943	S	*	7/2020	Wersland	D24/211
D896,393	S	*	9/2020	Wersland	D24/211
10,758,452	B2	*	9/2020	Wersland	A61H 1/00
D898,207	S		10/2020	Yang	
D899,926	S	*	10/2020	Guduru	D9/439
D904,636	S	*	12/2020	Delassus	D24/214
D907,792	S	*	1/2021	Marton	D24/215
D908,235	S	*	1/2021	Marton	D24/215
D910,870	S	*	2/2021	Marton	D24/215
D914,229	S	*	3/2021	Takeuchi	D24/215
D914,477	S	*	3/2021	Watson	D8/310
D917,714	S	*	4/2021	Chen	D24/215
D918,404	S	*	5/2021	Wersland	D24/211
D918,405	S	*	5/2021	Wersland	D24/211
2004/0260213	A1	*	12/2004	Szczepanski	A61H 15/0085 601/46
2014/0243718	A1	*	8/2014	Black	A61H 7/003 601/120
2019/0015294	A1	*	1/2019	Nazarian	A61H 15/0085
2019/0017528	A1	*	1/2019	Wersland	A61H 23/006
2019/0350793	A1	*	11/2019	Wersland	A61H 23/006
2020/0352821	A1	*	11/2020	Wersland	A61H 1/00

OTHER PUBLICATIONS

[No Author Listed], AV Mini Personal Massage Magic Vibrating Rocket Type Bullet Pocket massager. Groupon. Retrieved from the Internet Oct. 29, 2020: https://www.groupon.com/deals/gg-mp-av-mini-personal-massage-magic-vibrating-rocket-type-bullet-pocket-massager. 4 pages.

[No Author Listed], Big Teaze Toys Rocket Vibrator, Yellow, One Size. Amazon.co.uk. Retrieved from the Internet Oct. 29, 2020: https://www.amazon.co.uk/Big_Teaze-Rocket-Vibrator-Yellow/dp/B006HZ3TWS. 3 pages.

[No Author Listed], Electronic Acupuncture Pen, Electric Meridians Laser Acupuncture Machine Magnet Therapy Instrument Meridian Energy Pen Massager Relief Pain Tools (C3). GistGear The Essential Guide To The Best Gear! Oct. 18, 2020;. Retrieved from the Internet: https://gistgear.com/product/B07W4JY76L. 28 pages.

[No Author Listed], Get My Rocket—Because Everybody Can Use A Tune Up. Indiegogo. Retrieved from the Internet Oct. 29, 2020: https://www.indiegogo.com/projects/get-my-rocket-because-everybody-can-use-a-tune-up#/. 4 pages.

[No Author Listed], New Range of Motör-Head Branded Sex Toys Now Available; "Weapons Grade" Orgasms Promised. Bravewords.com. Nov. 23, 2016. Retrieved from the Internet: http://bravewords.com/news/new-range-of-motorhead-branded-sex-toys-now-available-weapons-grade-orgasms-promised. 16 pages.

[No Author Listed], Pain Gone. BeatPain. Retrieved from the Internet Oct. 29, 2020: https://jmandbn.wixsite.com/bp-new/product-page/pain-gone. 1 page.

[No Author Listed], Portable Laser Therapy Acupuncture Pen Transcutaneous Electrical Nerve Stimulation Tens. Btrworlds. 2014. Retrieved from the Internet: http://tens-musclestimulators.btrworlds.com/transcutaneous-electrical-nerve-stimulation-tens/portable-laser-therapy-acupuncture-pen-transcutaneous-electrical-nerve-stimulation-tens-1674756.html. 5 pages.

[No Author Listed], Electronic Massage Pen, Acupuncture Pen, Electric Meridian Energy, Electric Meridians Laser Acupuncture Machine for Pain Relief (Battery Not Included). Amazon. Jun. 21, 2020. https://www.amazon.com/Electronic-Acupuncture-Electric-Meridian-Meridians/dp/B087TM834Z/ref=cm_cr_arp_d_product_top?ie=UTF8. Shown on p. 1 (2020).

* cited by examiner

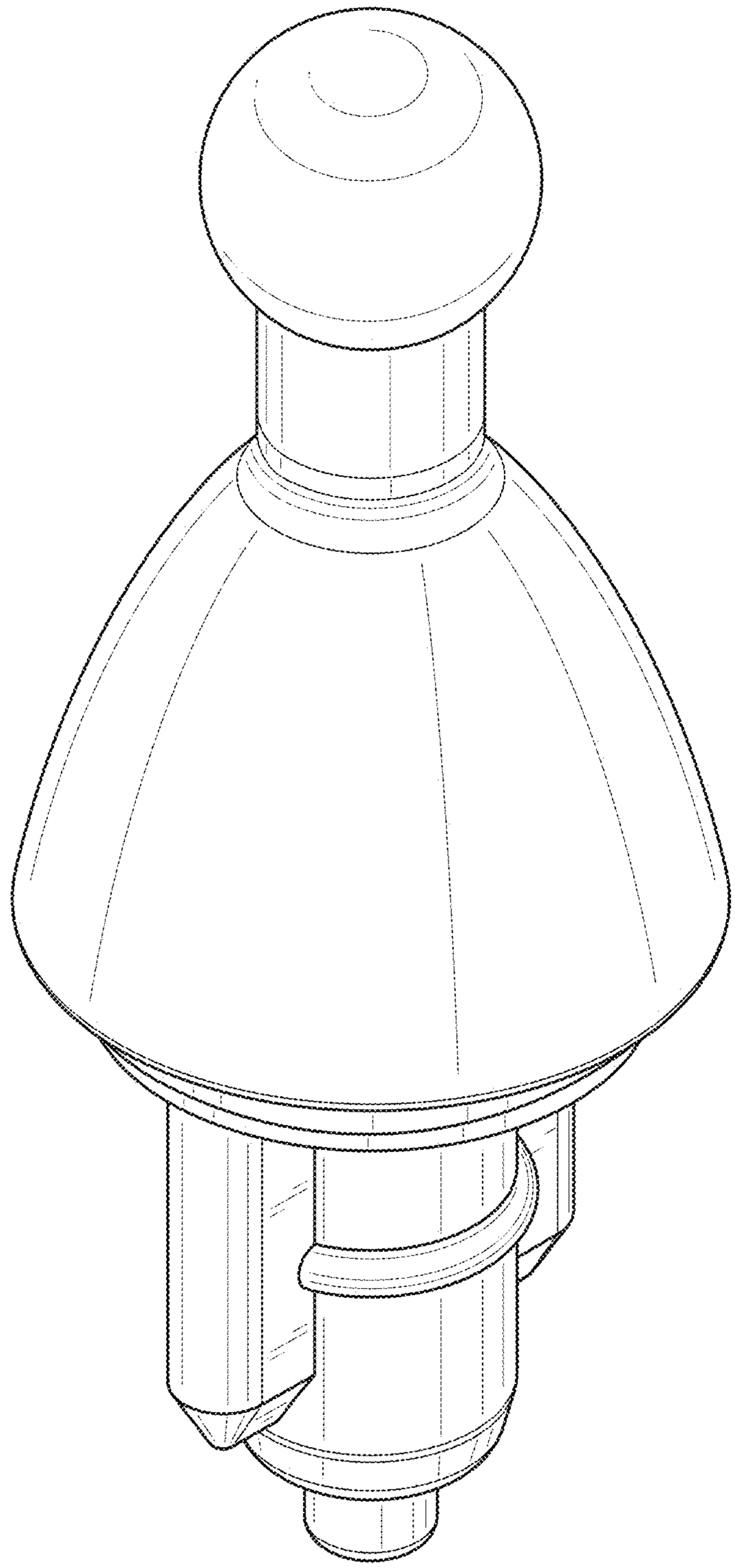

FIG. 1

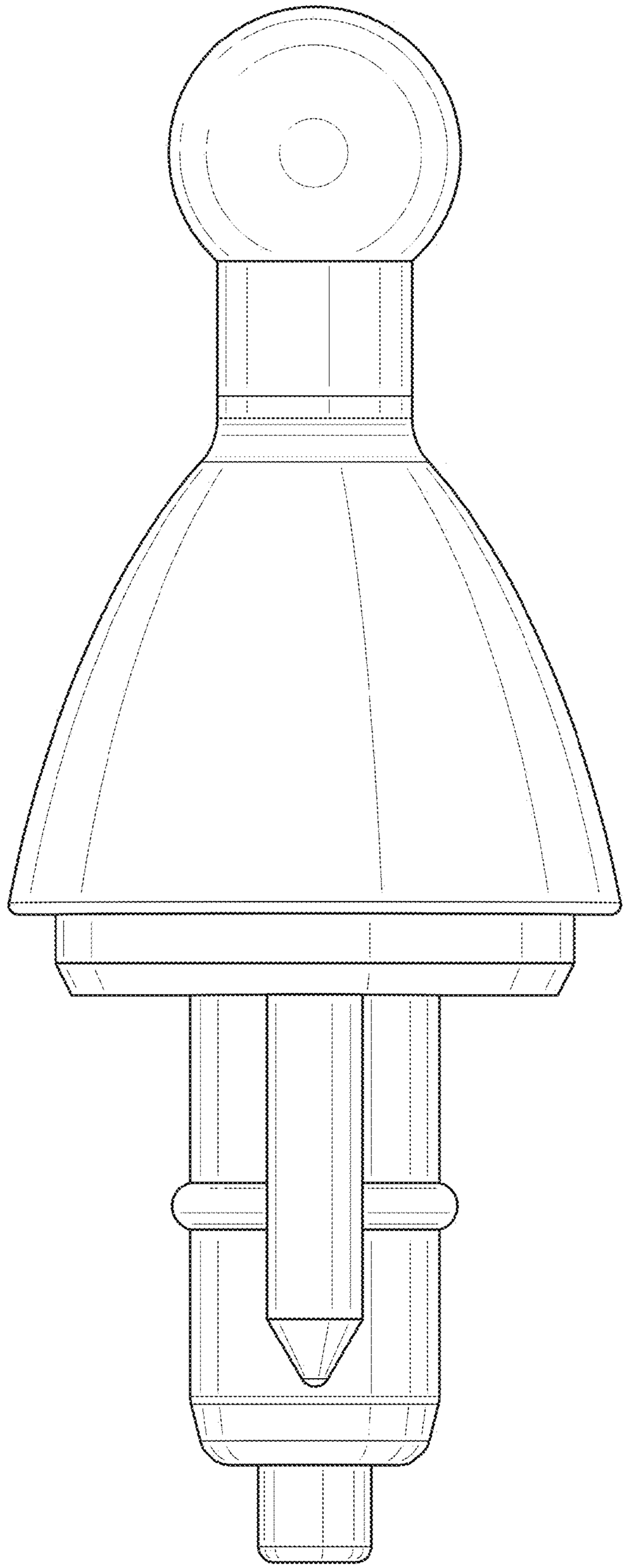

FIG. 2

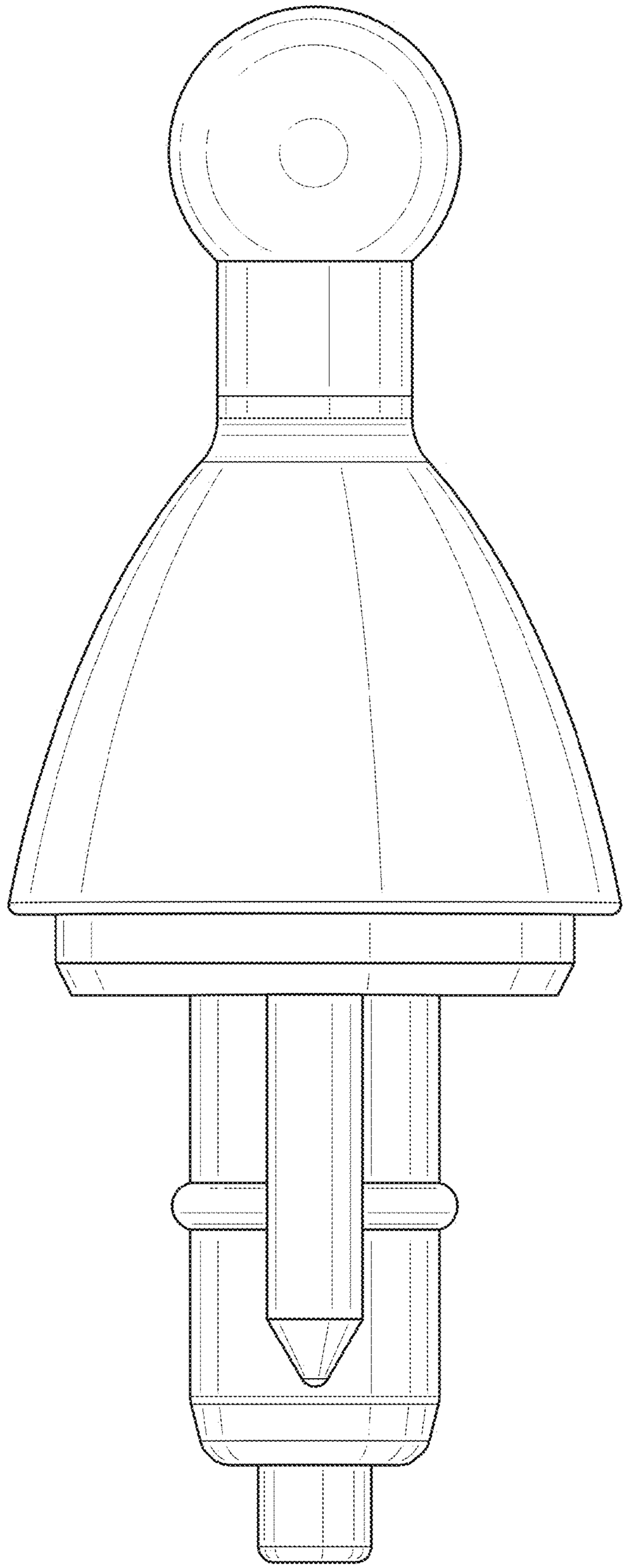

FIG. 3

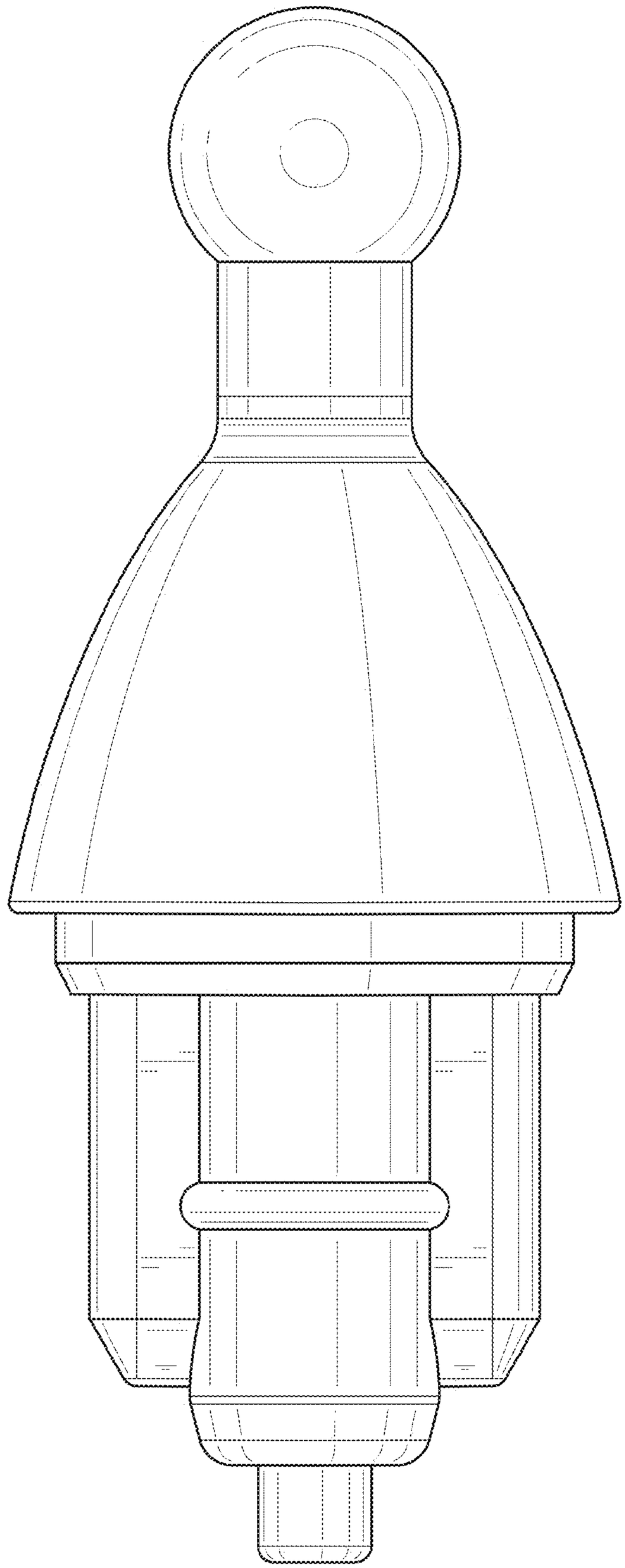

FIG. 4

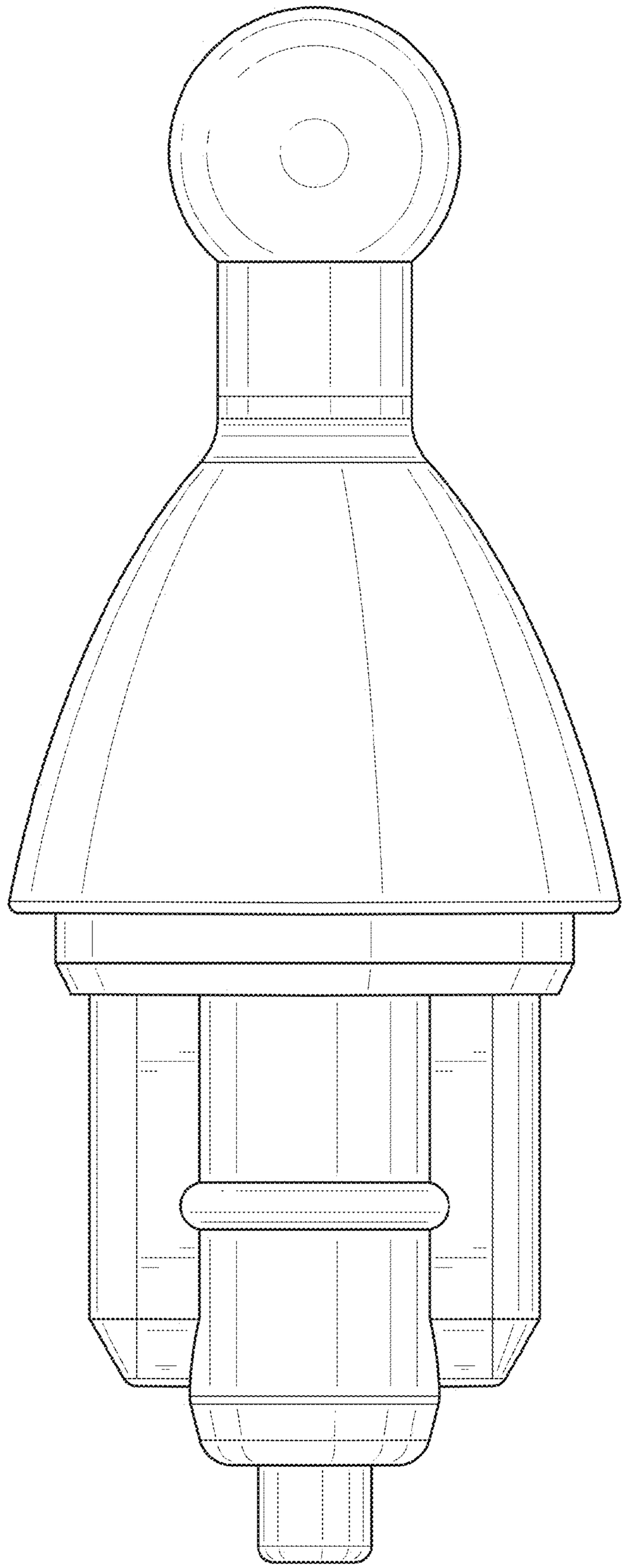

FIG. 5

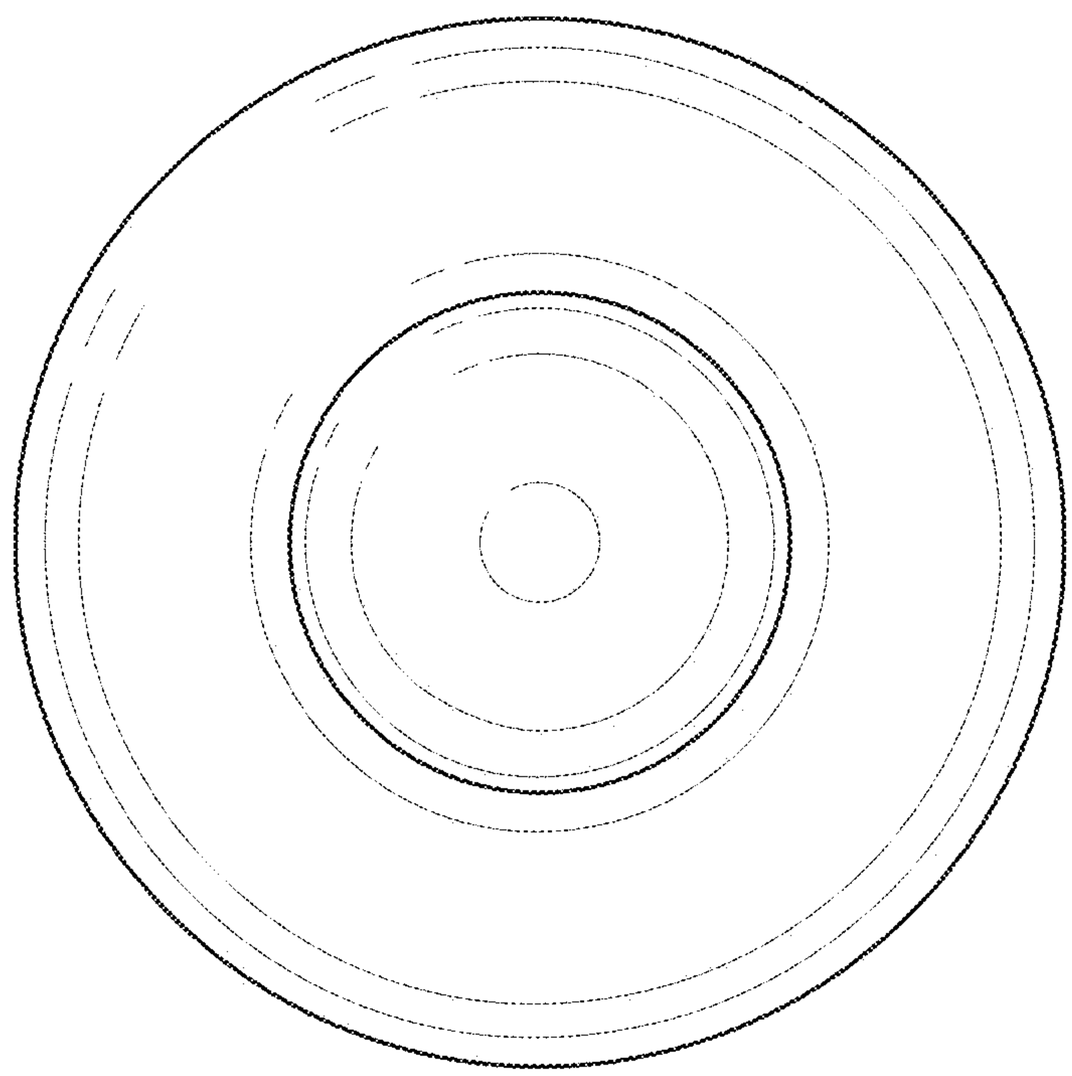

FIG. 6

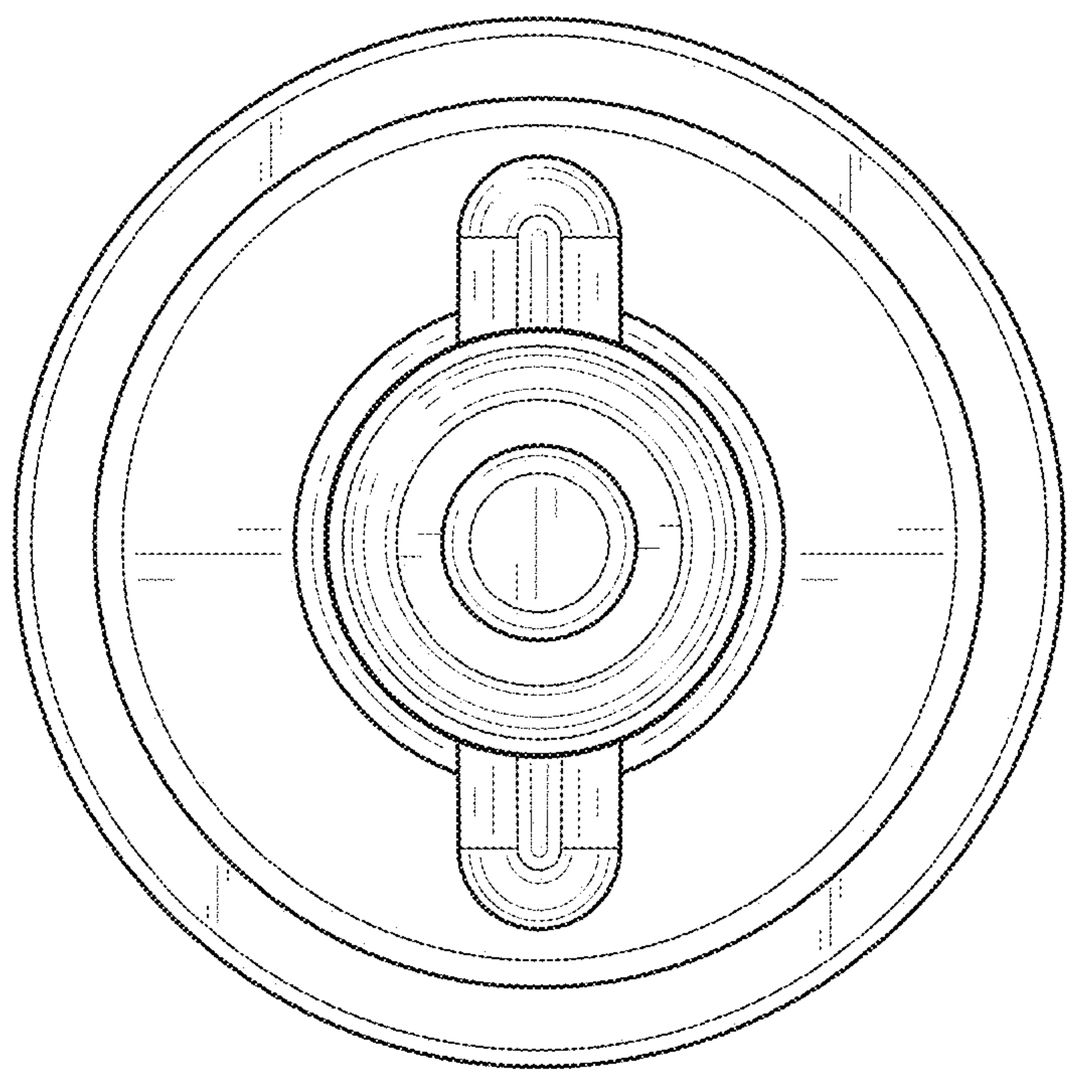

FIG. 7

UNITED STATES PATENT AND TRADEMARK OFFICE

CERTIFICATE OF CORRECTION

PATENT NO. : D949,417 S
APPLICATION NO. : 29/756870
DATED : April 19, 2022
INVENTOR(S) : Ajit Khubani et al.

It is certified that error appears in the above-identified patent and that said Letters Patent is hereby corrected as shown below:

On the Title Page

Item (72), the place of residence of Inventor Paul Dowd "Scarsdale, NJ (US)" should be replaced with: --Scarsdale, NY (US)--.

Signed and Sealed this
Thirty-first Day of January, 2023

Katherine Kelly Vidal

Katherine Kelly Vidal
Director of the United States Patent and Trademark Office