US00D949331S

(12) United States Design Patent

Sauer

(10) Patent No.: US D949,331 S
(45) Date of Patent: ** Apr. 19, 2022

(54) **DOCK FOR SURGICAL EQUIPMENT HOLDER**

(71) Applicant: **LSI Solutions, Inc.**, Victor, NY (US)

(72) Inventor: **Jude S. Sauer**, Pittsford, NY (US)

(73) Assignee: **LSI Solutions, Inc.**, Victor, NY (US)

(**) Term: **15 Years**

(21) Appl. No.: **29/725,710**

(22) Filed: **Feb. 26, 2020**

(51) **LOC (13) Cl.** **24-02**

(52) **U.S. Cl.**
USPC **D24/133**; D24/184

(58) **Field of Classification Search**
USPC D24/128, 135, 155, 159, 183, 184, 190, D24/133; D15/140, 199; D8/71–73
CPC A61B 2017/0287; A61B 90/50; A61B 1/00149; B25J 11/0005
See application file for complete search history.

(56) **References Cited**

U.S. PATENT DOCUMENTS

D273,044 S * 3/1984 Holcomb D24/199
D293,470 S * 12/1987 Adler D24/140
D299,750 S * 2/1989 Garcia D24/199
(Continued)

OTHER PUBLICATIONS

MiniARM® System. Online, published date unknown. Retrieved on Dec. 19, 2019 from URL: https://www.lsisolutions.com/products/8/miniarm-system/.*

(Continued)

Primary Examiner — Susan Bennett Hattan
Assistant Examiner — Omeed Agilee
(74) *Attorney, Agent, or Firm* — Michael E. Coyne

(57) **CLAIM**

The ornamental design for a dock for surgical equipment holder, substantially as shown and described.

DESCRIPTION

FIG. **1** is a front top right perspective view of a dock for surgical equipment holder in accordance with the present invention;
FIG. **2** is an enlarged perspective view thereof taken from area **2** encircled in FIG. **1**;
FIG. **3** is an enlarged perspective view thereof taken from area **3** encircled in FIG. **1**;
FIG. **4** is an enlarged perspective view thereof taken from area **4** encircled in FIG. **1**;
FIG. **5** is an enlarged perspective view thereof taken from area **5** encircled in FIG. **1**;
FIG. **6** is a front bottom right perspective view thereof;
FIG. **7** is an enlarged perspective view thereof taken from area **7** encircled in FIG. **6**;
FIG. **8** is an enlarged perspective view thereof taken from area **8** encircled in FIG. **6**;
FIG. **9** is a rear top right perspective view thereof;
FIG. **10** is an enlarged perspective view thereof taken from area **10** encircled in FIG. **9**;
FIG. **11** is a front view thereof;
FIG. **12** is an enlarged perspective view thereof taken from area **12** encircled in FIG. **11**;
FIG. **13** is a left side elevational view thereof;
FIG. **14** is a rear elevational view thereof.
FIG. **15** is a right side elevational view thereof;
FIG. **16** is a top plan view thereof;
FIG. **17** is an enlarged perspective view thereof taken from area **17** encircled in FIG. **16**; and,
FIG. **18** is a bottom plan view thereof.
The broken lines depict portions of the dock for surgical equipment holder that form no part of the claimed design. The dot-dot-dash broken lines in the drawings depict boundaries of the enlarged views and form no part of the claimed design.

1 Claim, 18 Drawing Sheets

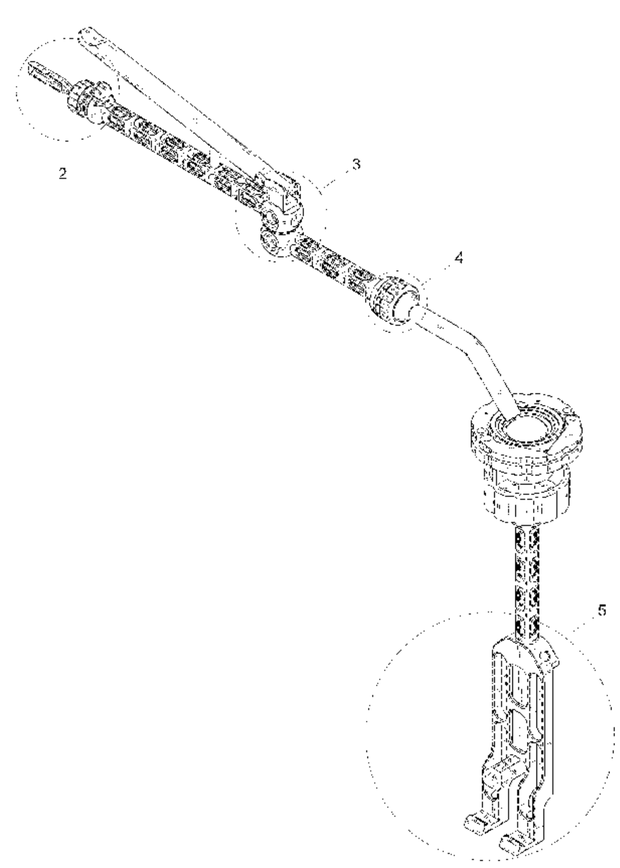

(56) **References Cited**

U.S. PATENT DOCUMENTS

D369,413	S	*	4/1996	Lodewyck, Jr.	D24/199
D388,515	S	*	12/1997	Bookwaiter	D24/138
D389,242	S	*	1/1998	Bookwaiter	D24/138
D420,130	S	*	2/2000	Nicholas	D24/135
D709,201	S	*	7/2014	Silvonen	D24/177
D725,694	S	*	3/2015	Florey	F16M 11/2092 D16/242
D746,474	S	*	12/2015	Koros	D24/184
D754,227	S	*	4/2016	Parrot	D15/199
D802,041	S	*	11/2017	He	D15/199
D814,550	S	*	4/2018	Florey	D16/242
D873,417	S	*	1/2020	Scott	D24/185
D873,878	S	*	1/2020	Vazquez	D15/199
D877,787	S	*	3/2020	Kinoshita	D15/199
D898,192	S	*	10/2020	Sauer	D24/133
D898,909	S	*	10/2020	Sauer	D24/133
D914,780	S	*	3/2021	Hammers	D15/199
D920,507	S	*	5/2021	Sauer	D24/133
D921,733	S	*	6/2021	Li	D15/199
2017/0066130	A1	*	3/2017	Corkum	B25J 9/1651
2018/0200896	A1	*	7/2018	Boyland	F16D 66/00
2021/0038343	A1	*	2/2021	Sauer	F16M 13/022
2021/0059783	A1	*	3/2021	Haraguchi	A61B 90/50

OTHER PUBLICATIONS

Endoscope Holders in Cranial Neurosurgery: Part I—Technology, Trends, and Implications. Online, published date May 2016. Retrieved on Jul. 15, 2021 from URL: https://www.sciencedirect.com/science/article/pii/S1878875016001406.*

* cited by examiner

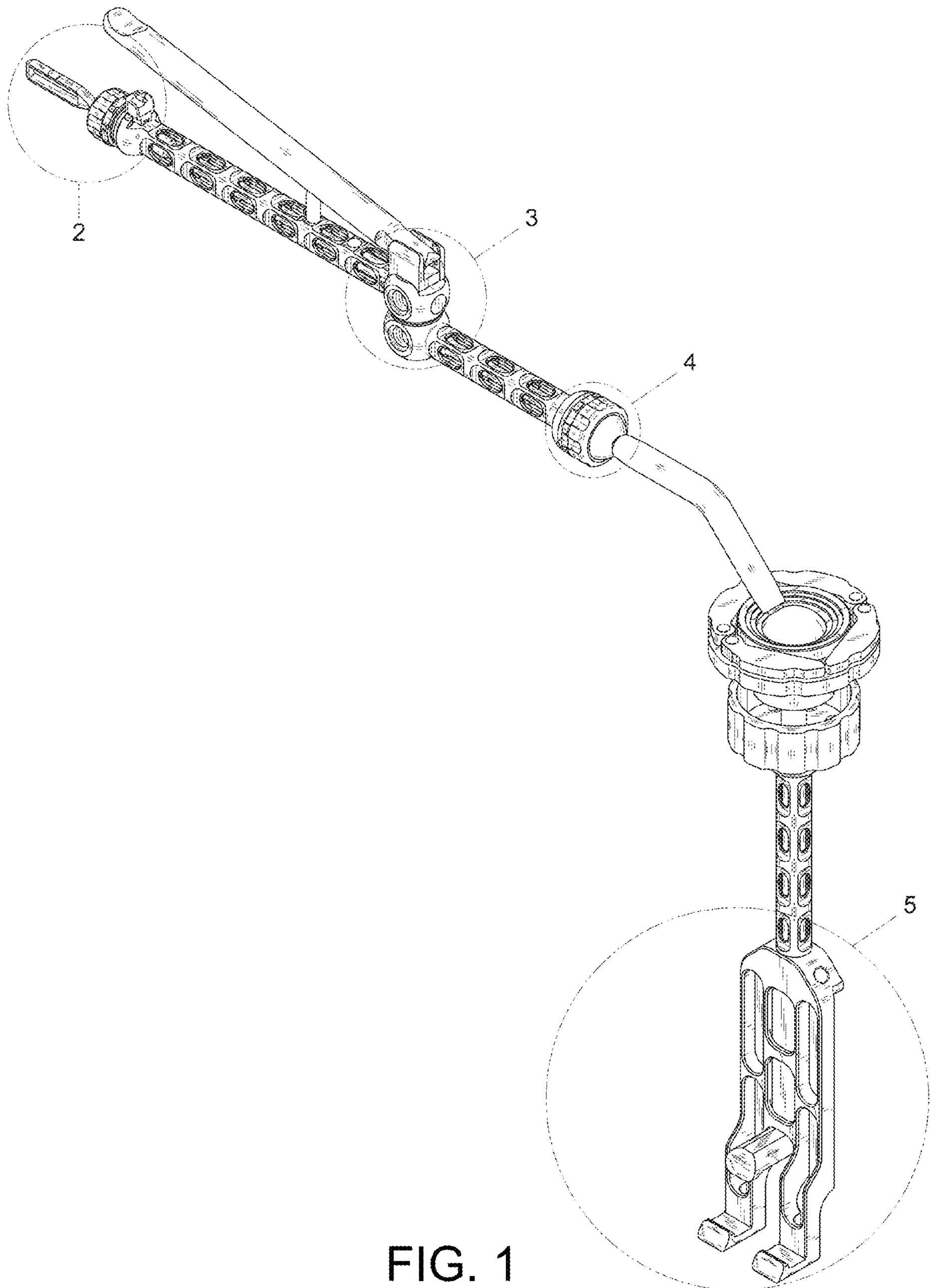

FIG. 1

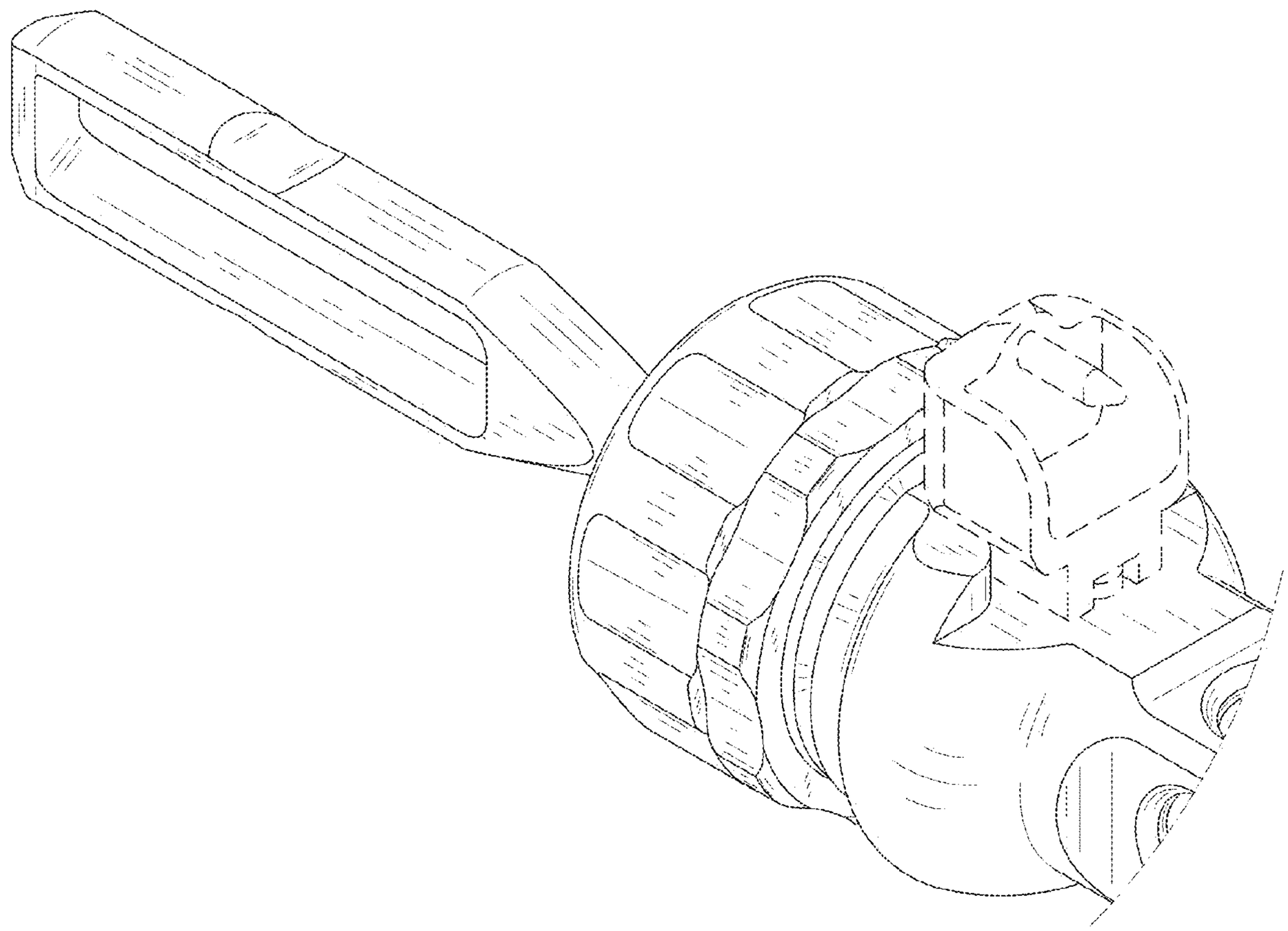

FIG. 2

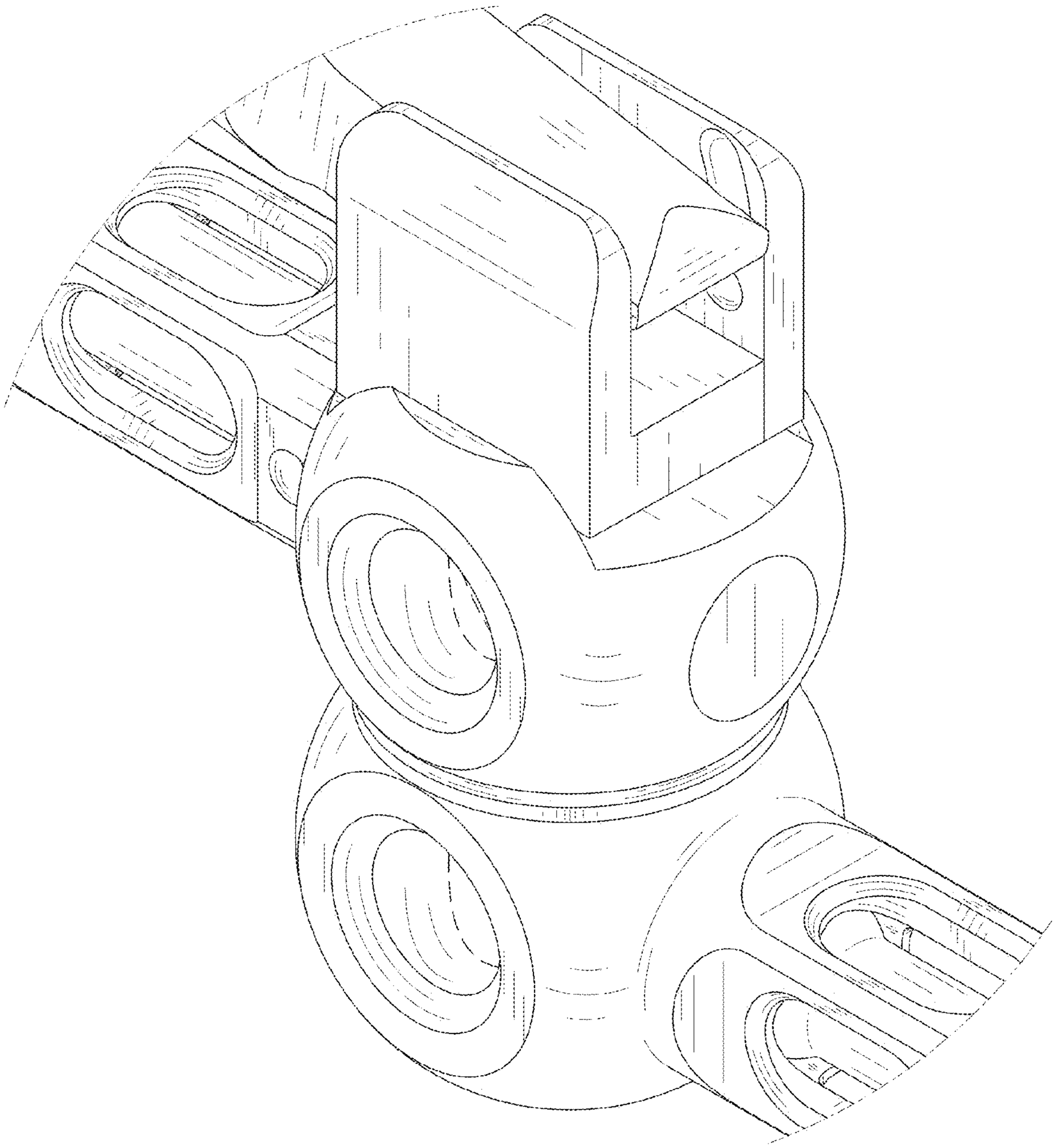

FIG. 3

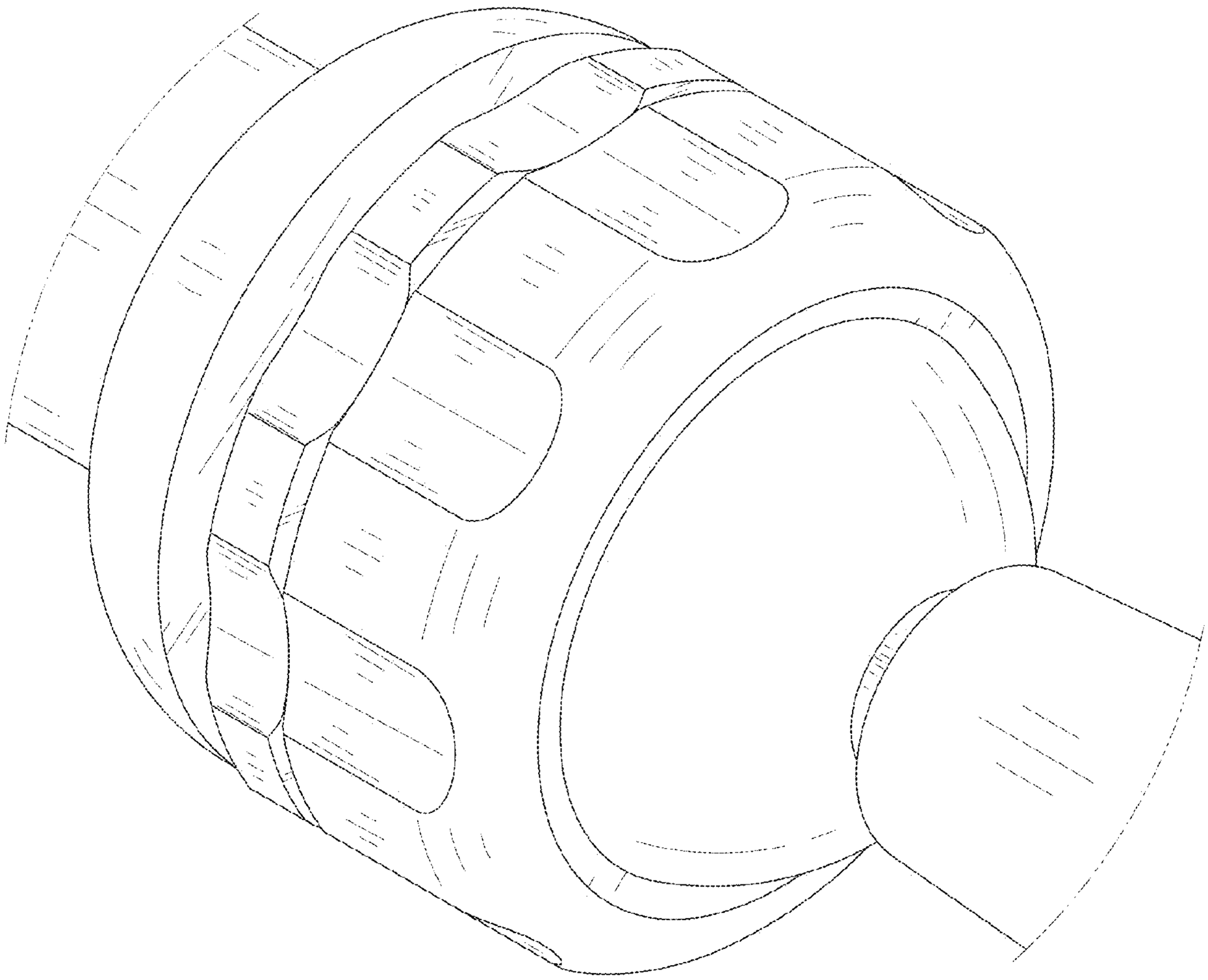

FIG. 4

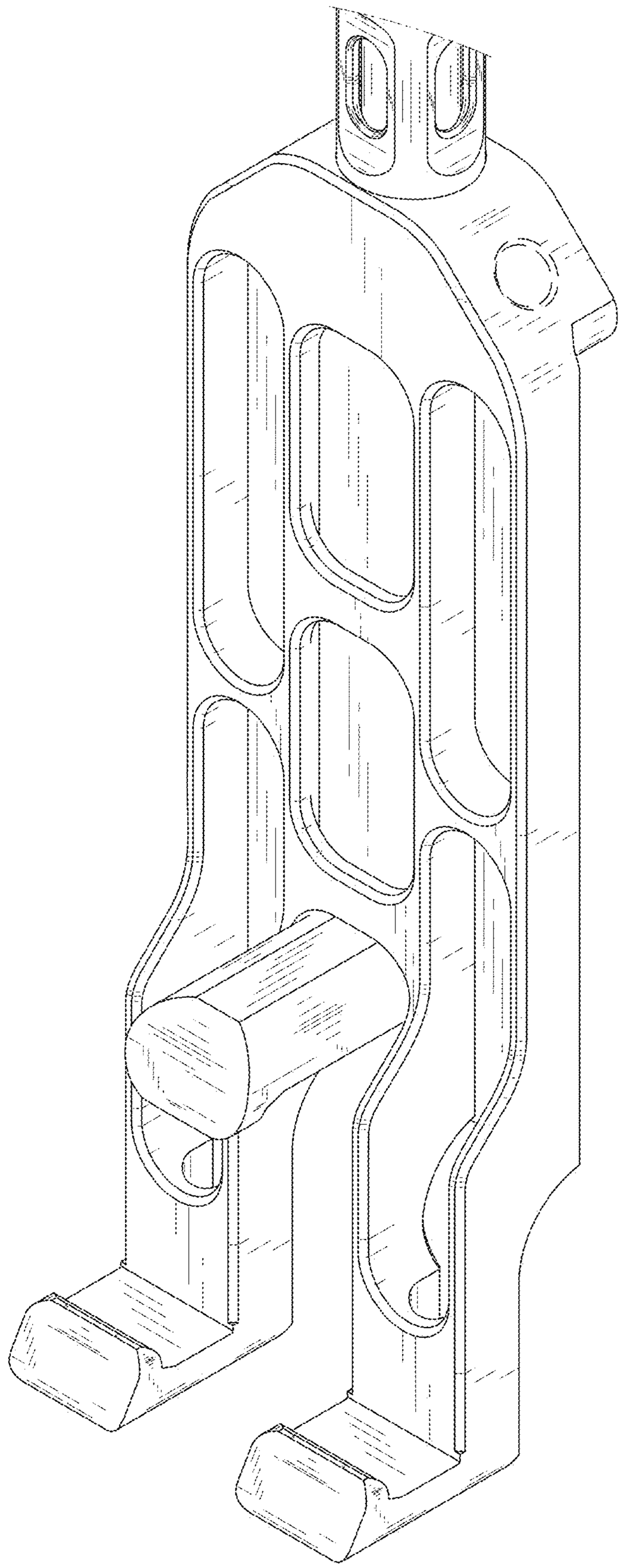

FIG. 5

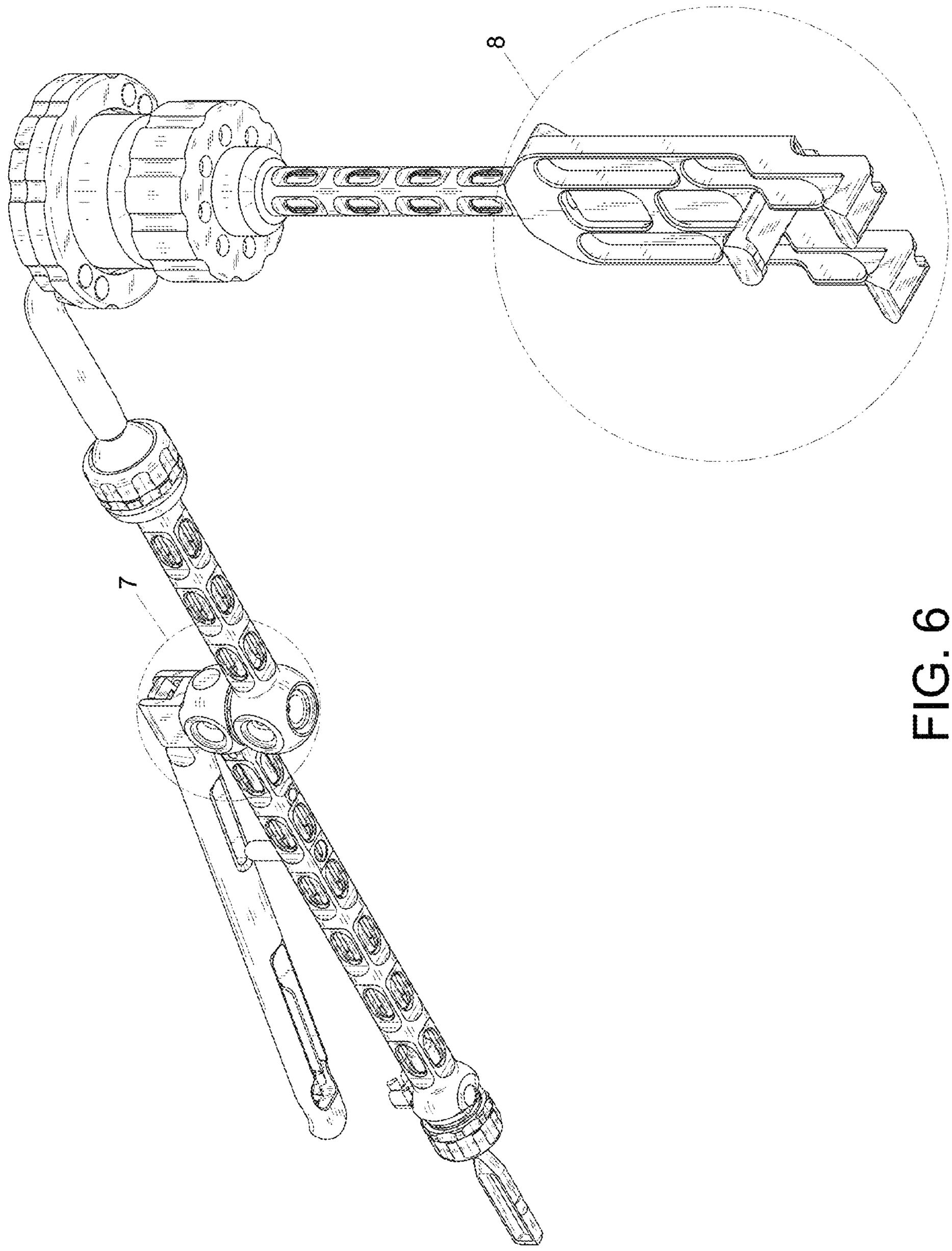

FIG. 6

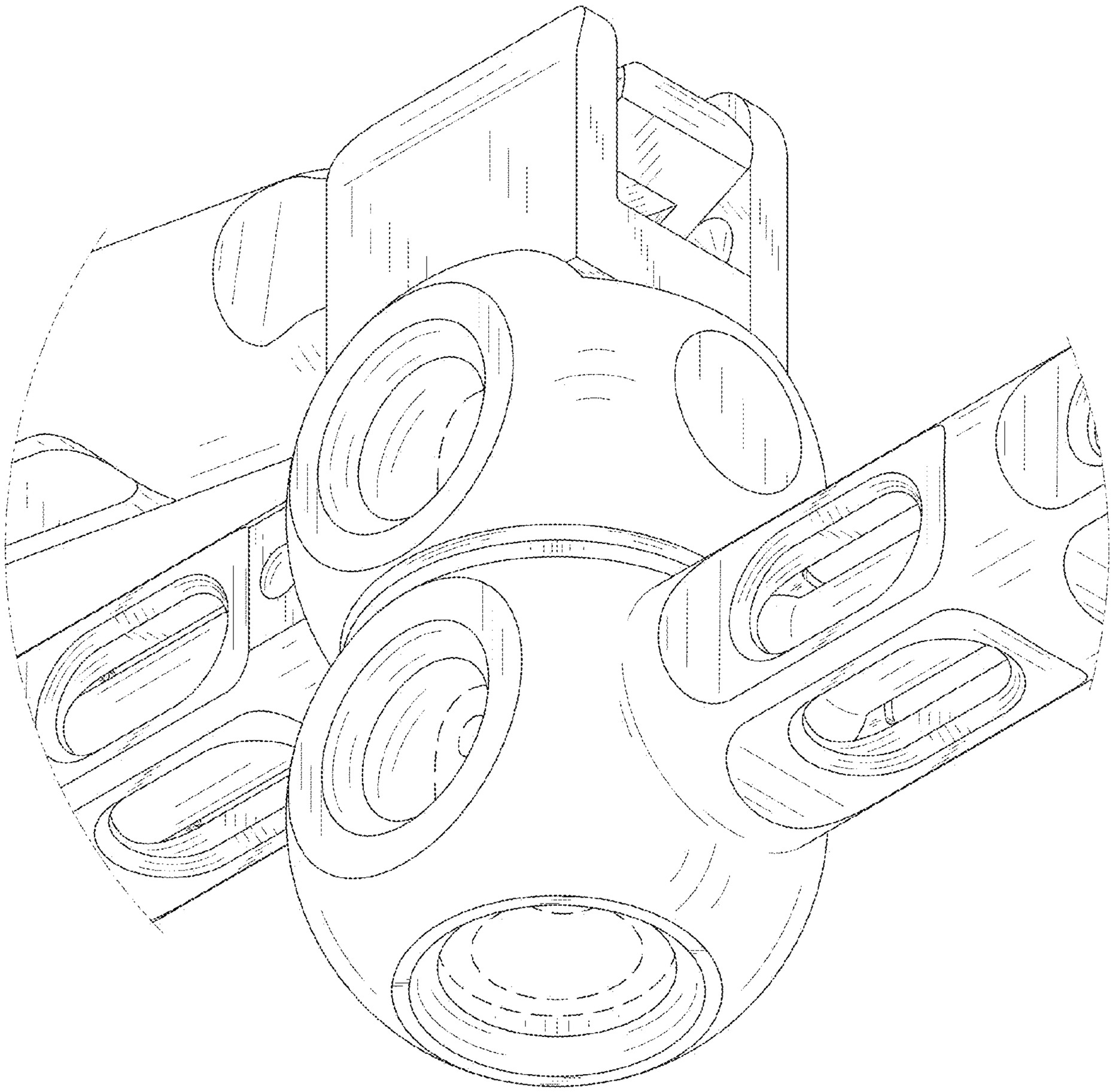

FIG. 7

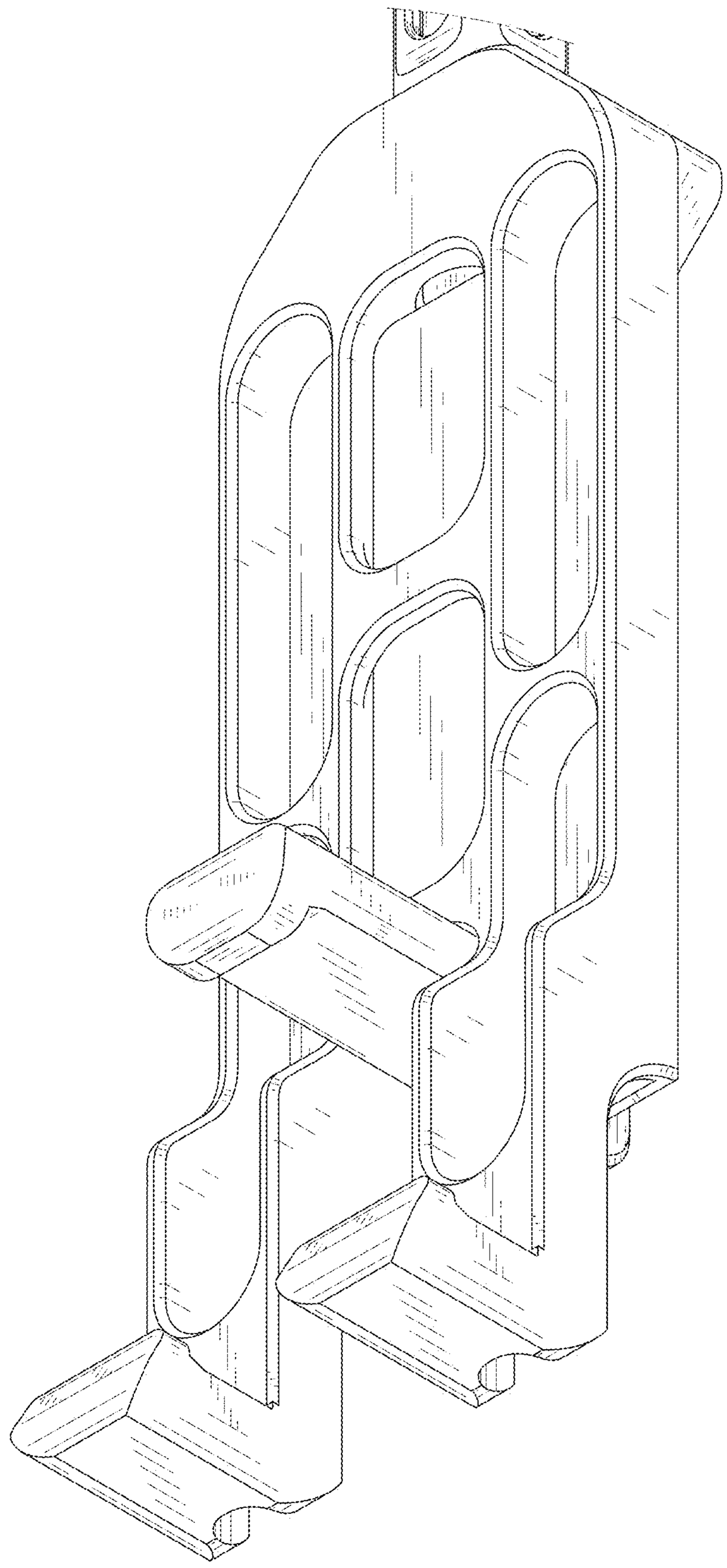

FIG. 8

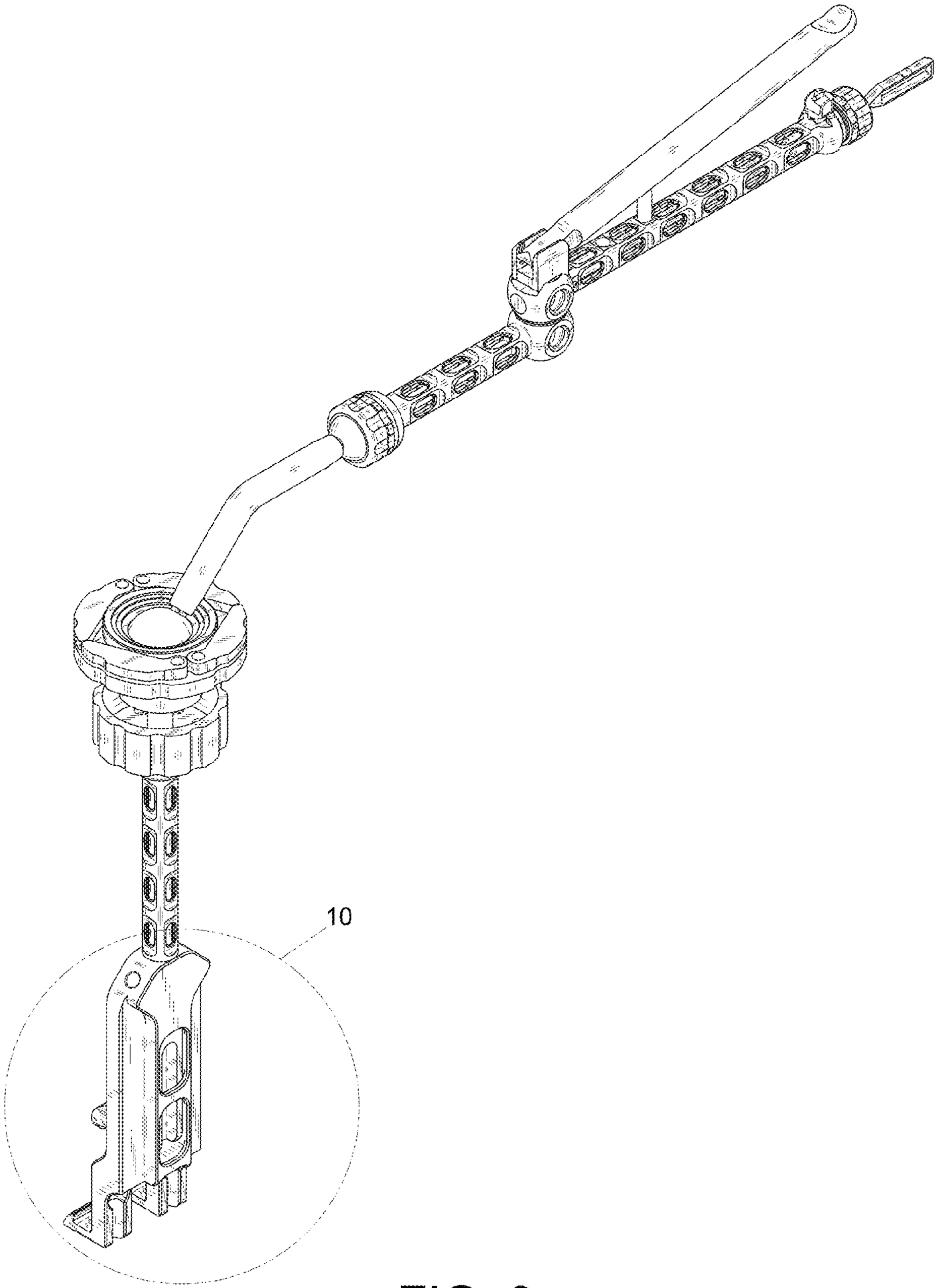

FIG. 9

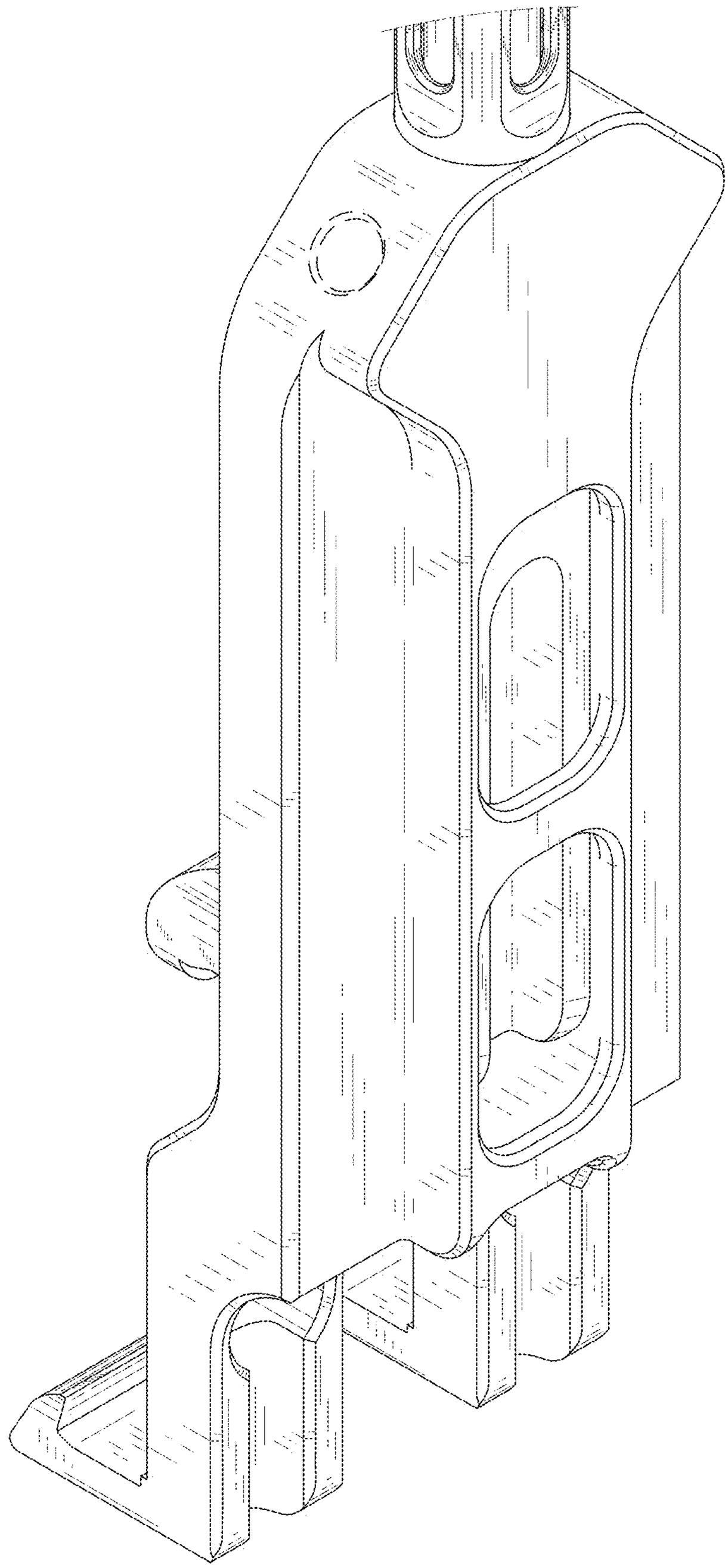

FIG. 10

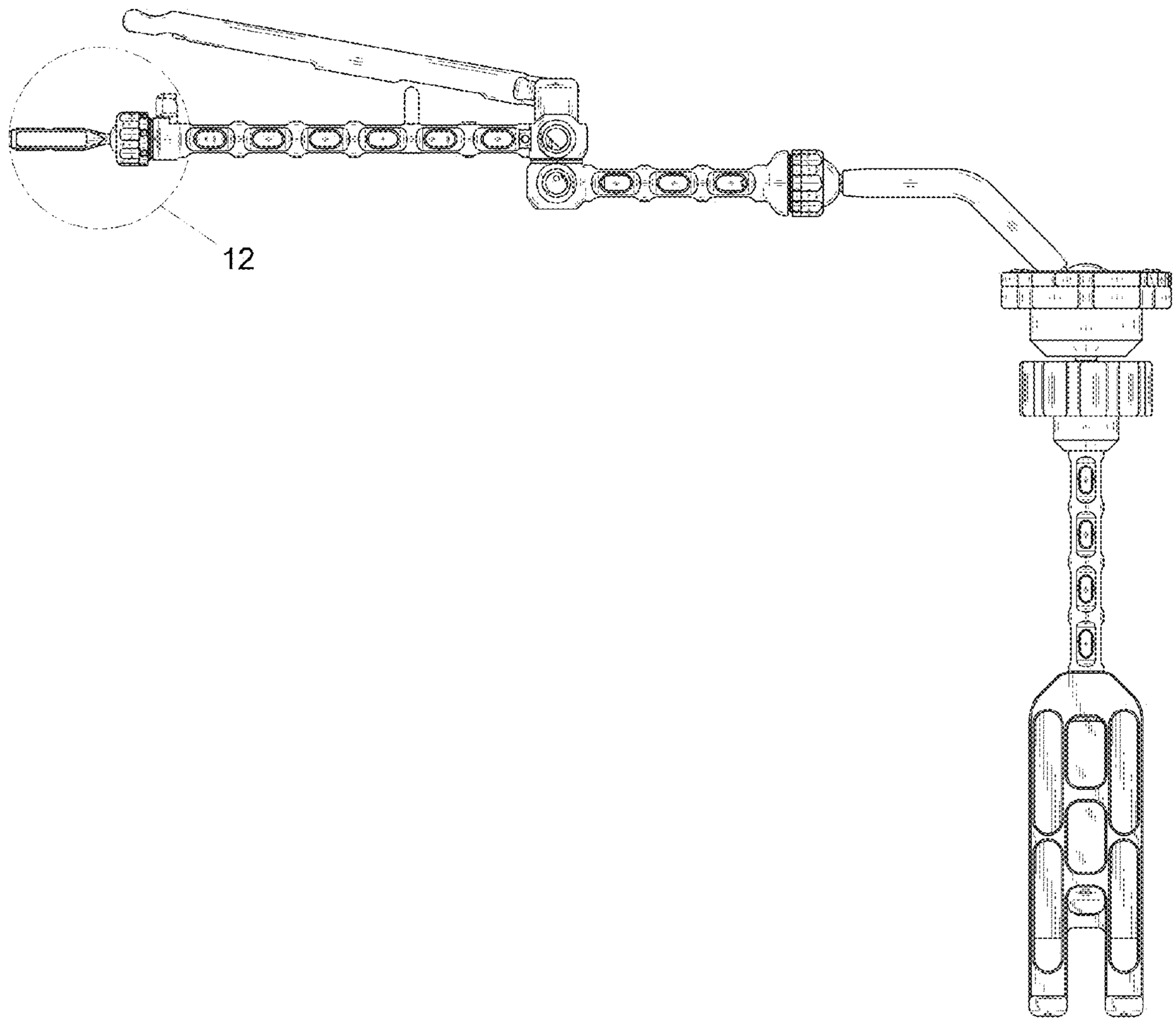

FIG. 11

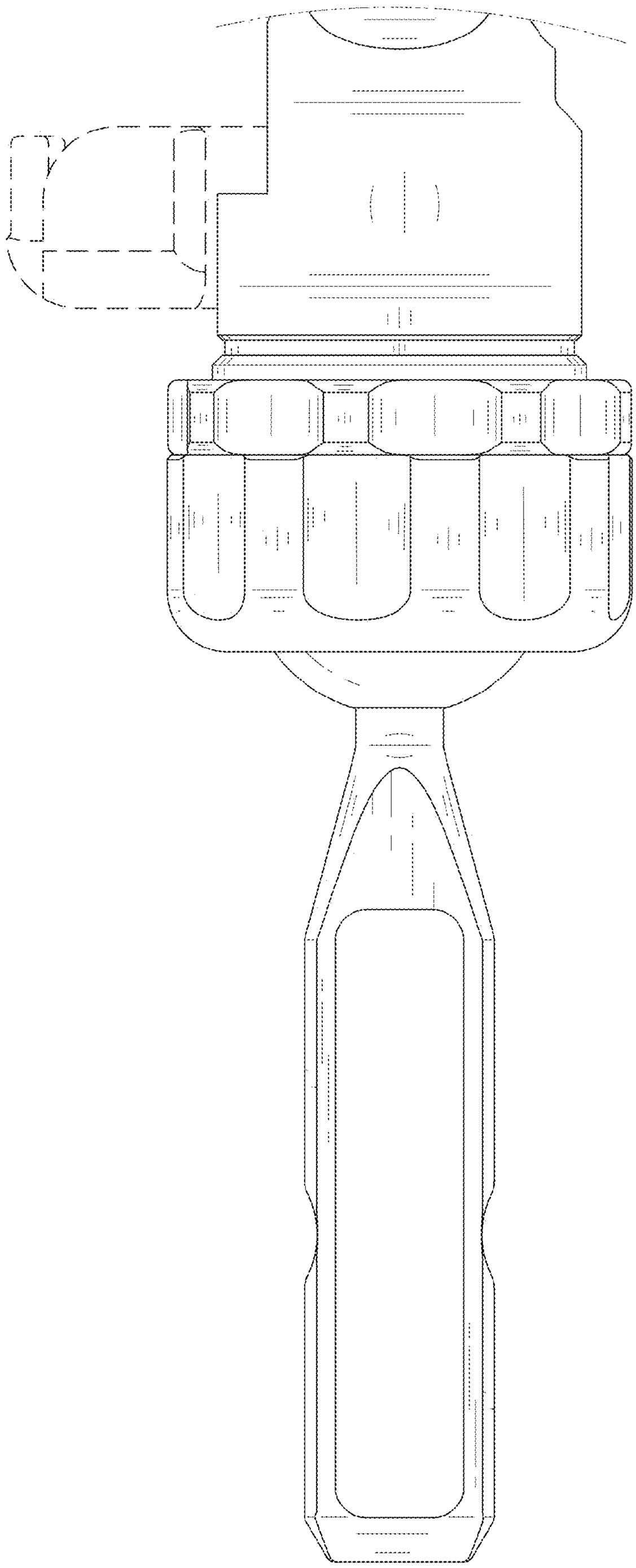

FIG. 12

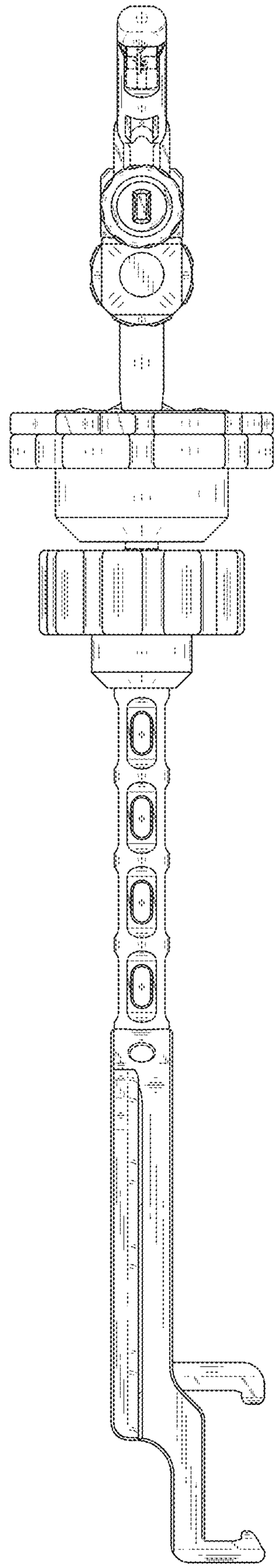

FIG. 13

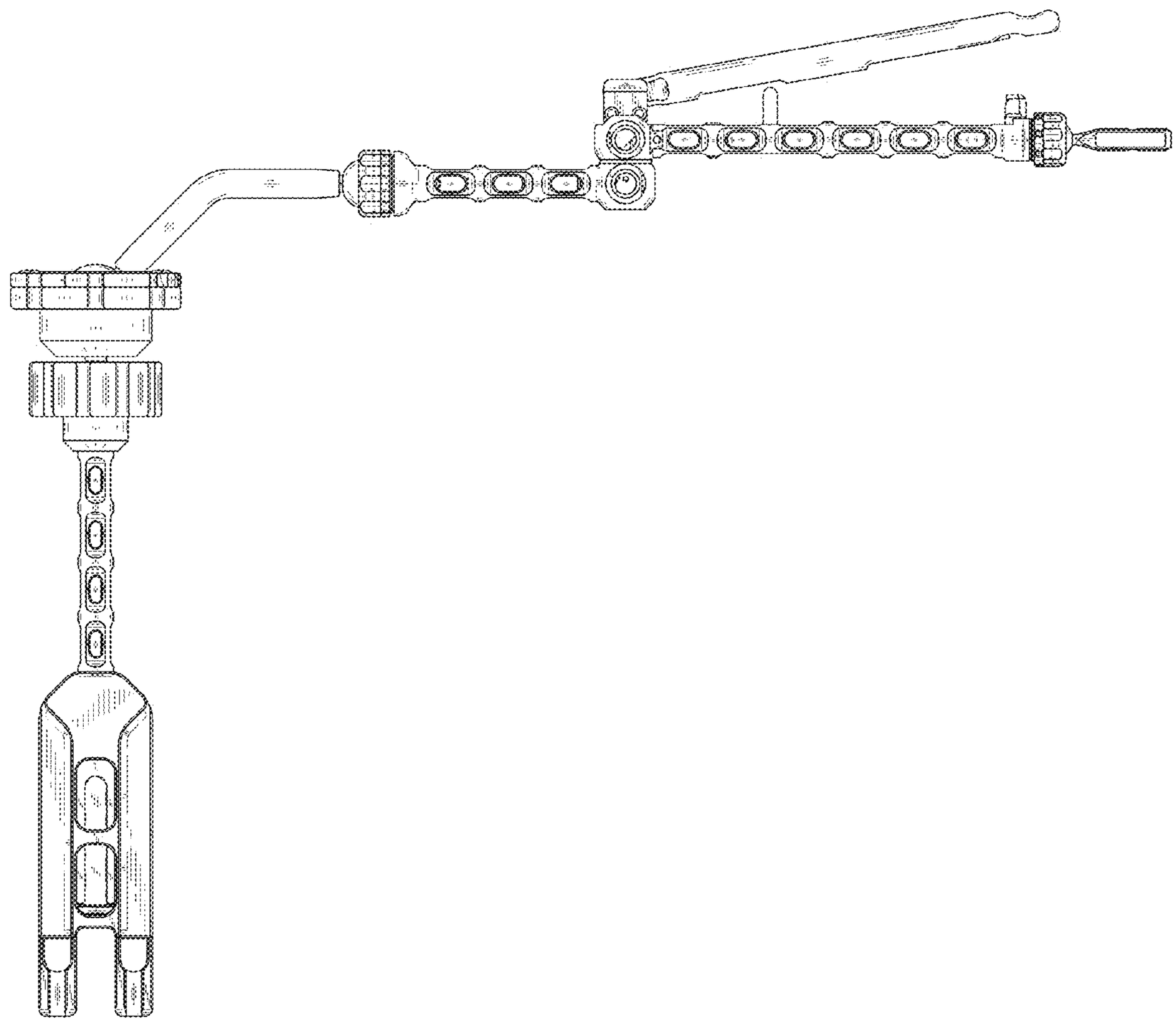

FIG. 14

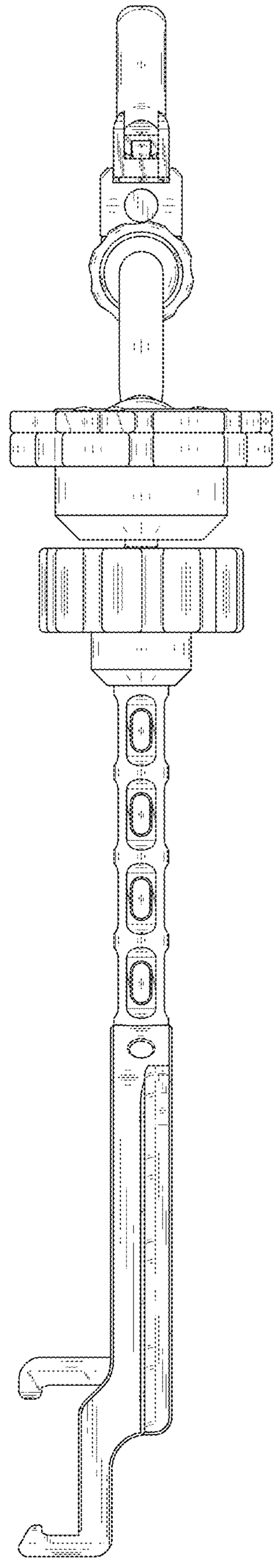

FIG. 15

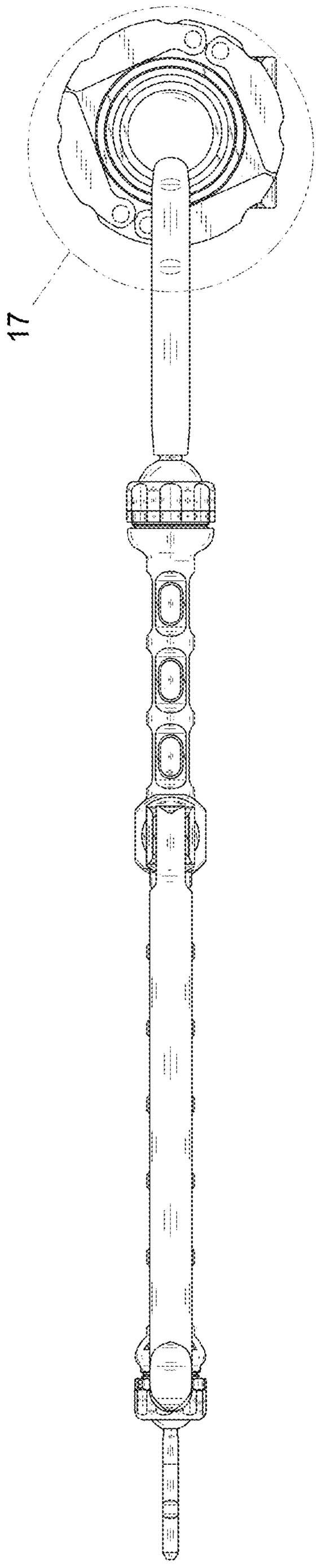

FIG. 16

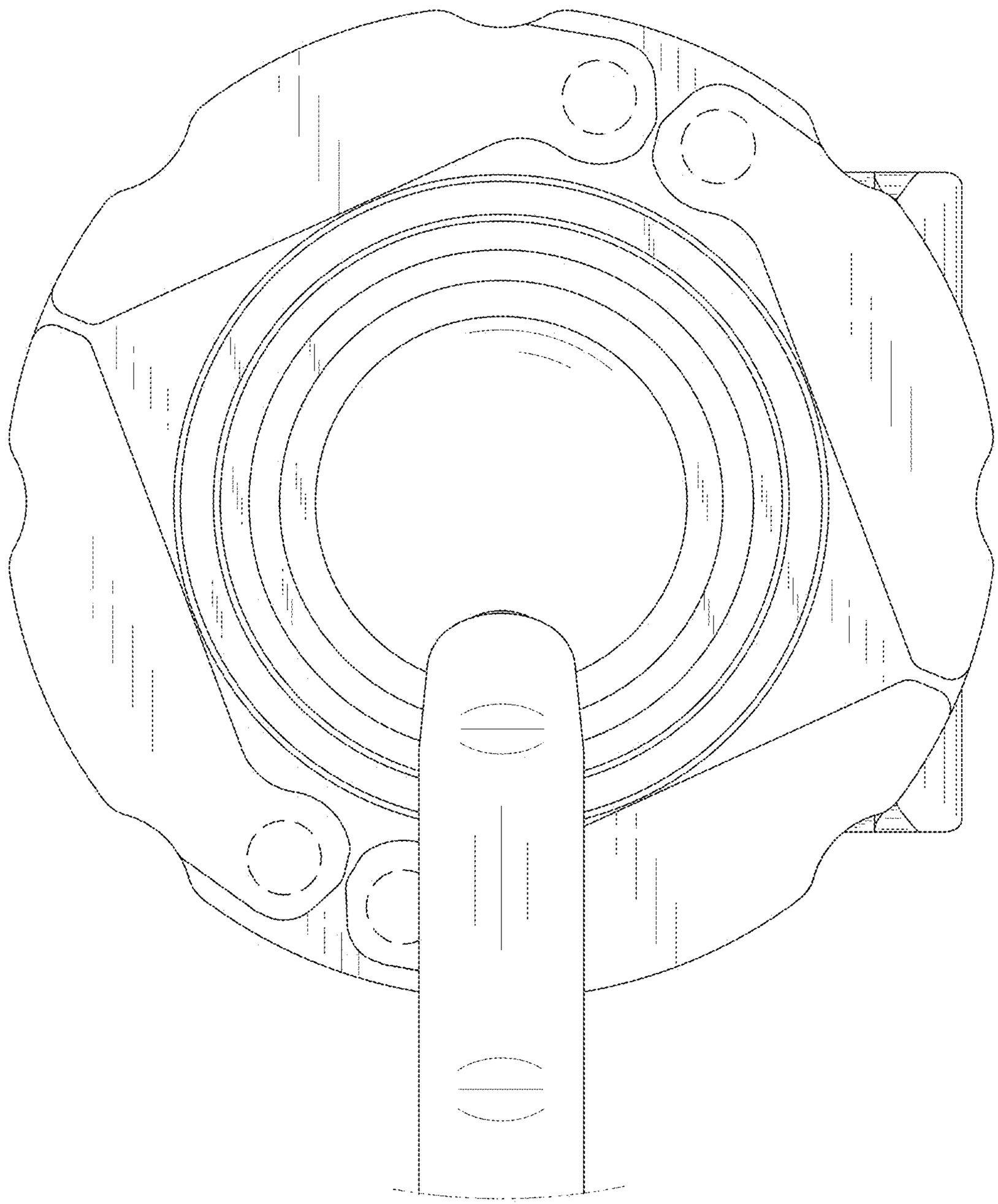

FIG. 17

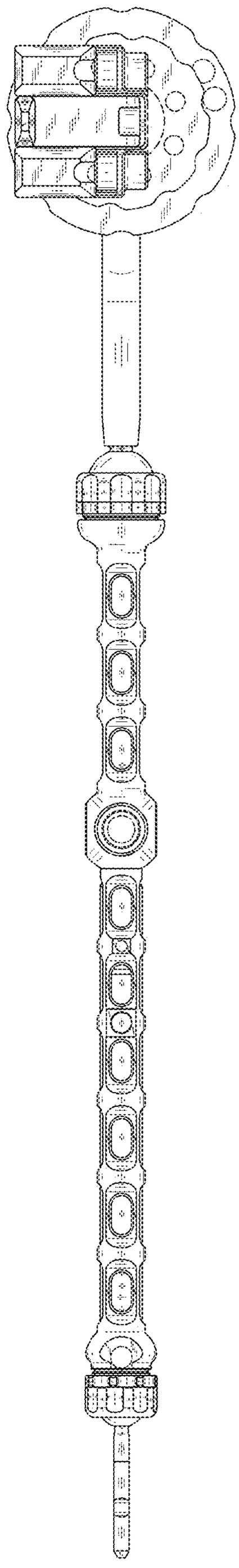

FIG. 18