US00D949132S

(12) United States Design Patent

Cong et al.

(10) Patent No.: US D949,132 S
(45) Date of Patent: ** Apr. 19, 2022

(54) **PLANAR ANTENNA**

(71) Applicant: **Galvani Bioelectronics Limited**, Hertfordshire (GB)

(72) Inventors: **Peng Cong**, Burlingame, CA (US); **Damiano Patron**, South San Francisco, CA (US); **Stephen O'Driscoll**, South San Francisco, CA (US)

(73) Assignee: **Galvani Bioelectronics Limited**, Hertfordshire (GB)

(**) Term: **15 Years**

(21) Appl. No.: **29/788,078**

(22) Filed: **Mar. 9, 2021**

Related U.S. Application Data

(62) Division of application No. 29/664,370, filed on Sep. 24, 2018, now Pat. No. Des. 916,688.

(51) **LOC (13) Cl.** **14-03**

(52) **U.S. Cl.**
USPC **D14/230**

(58) **Field of Classification Search**
USPC D14/230
CPC .. H01Q 1/12; H01Q 9/28; H01Q 1/40; H01Q 1/38; H01Q 9/16
See application file for complete search history.

(56) **References Cited**

U.S. PATENT DOCUMENTS

D515,075	S	*	2/2006	Kusanagi	D14/230
7,782,260	B2	*	8/2010	Tsai	H01Q 1/38 343/700 MS
8,264,418	B2	*	9/2012	Huang	H01Q 9/065 343/793
8,471,769	B2	*	6/2013	Wolf	H01Q 9/285 343/700 MS
D709,483	S	*	7/2014	Forster	D14/230
D791,745	S	*	7/2017	Gosalia	D14/230
D826,910	S	*	8/2018	Zhao	D14/230
D828,341	S	*	9/2018	Chang	D14/230
D838,261	S	*	1/2019	He	D14/230
D850,426	S	*	6/2019	He	D14/230
D856,983	S	*	8/2019	Zheng	D14/230
D859,375	S	*	9/2019	Gosalia	D14/230
D864,926	S	*	10/2019	Chen	D14/230
2008/0042905	A1	*	2/2008	Moon	H01Q 5/25 343/700 MS
2010/0060526	A1	*	3/2010	Cheng	H01Q 9/285 343/700 MS
2011/0074637	A1	*	3/2011	Sotoma	H01Q 9/0421 343/700 MS

(Continued)

FOREIGN PATENT DOCUMENTS

CN	305510107	*	9/2018
CN	306647593	*	6/2021

Primary Examiner — John R Yeh
(74) *Attorney, Agent, or Firm* — Patterson Thuente Pederson, P.A.

(57) **CLAIM**

The ornamental design for planar antenna, as shown and described.

DESCRIPTION

FIG. **1** is a perspective view of a planar antenna showing the claimed design;
FIG. **2** is a top view thereof;
FIG. **3** is a bottom view thereof;
FIG. **4** is a right side view thereof;
FIG. **5** is a left side view thereof;
FIG. **6** is a front view thereof; and,
FIG. **7** is a rear view thereof.
The broken lines illustrate environment and portions of the antenna that form no part of the claimed design.

1 Claim, 5 Drawing Sheets

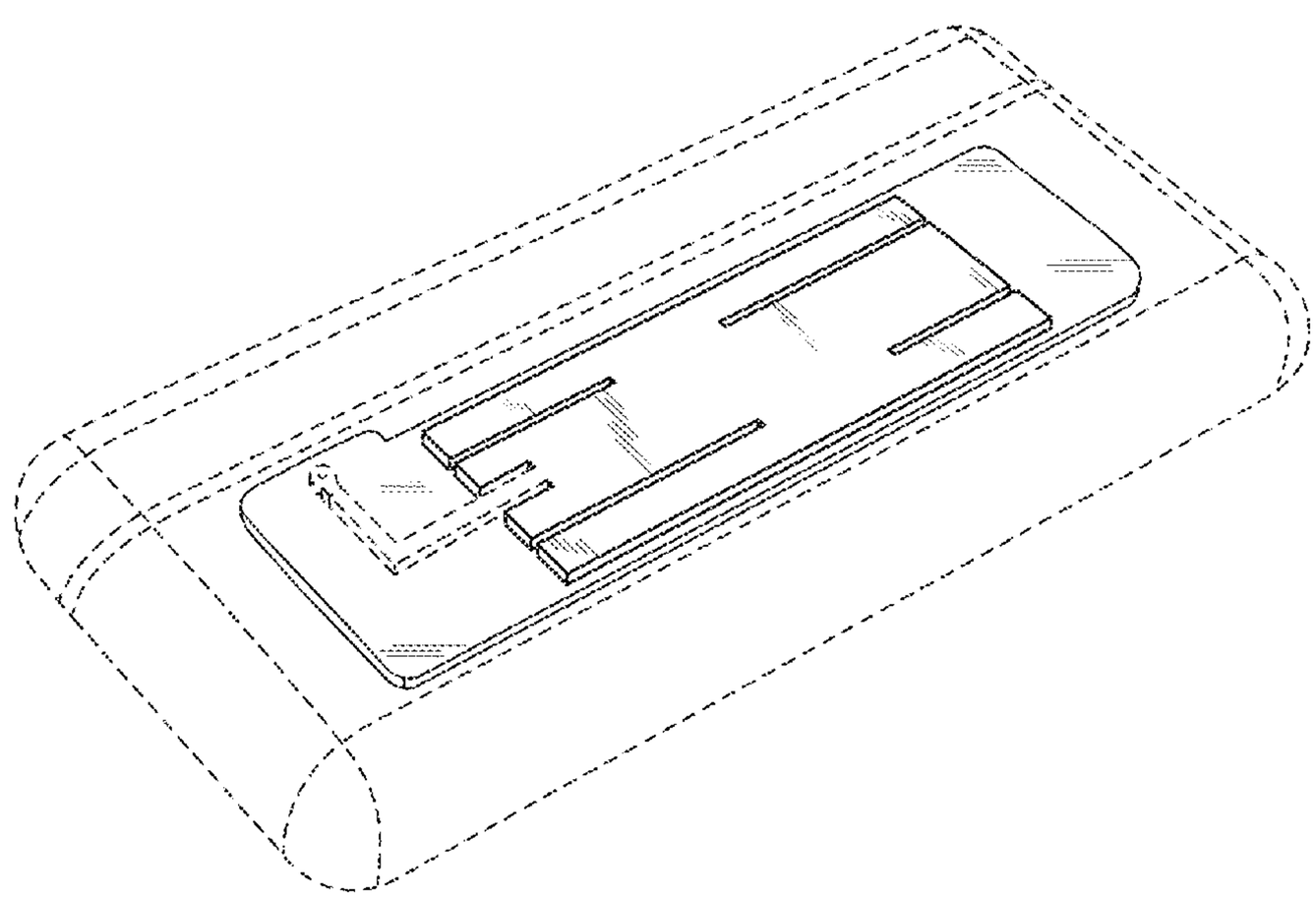

(56) **References Cited**

U.S. PATENT DOCUMENTS

2013/0120196	A1*	5/2013	Chiang	H01Q 1/38 343/700 MS
2018/0151956	A1*	5/2018	Ban	H01Q 1/38
2018/0248256	A1*	8/2018	Xiao	H01Q 19/108
2020/0400815	A1*	12/2020	Wintermantel	H01Q 21/068
2021/0036399	A1*	2/2021	Zhu	H01Q 1/50
2021/0083358	A1*	3/2021	Shao	H01Q 1/1221

* cited by examiner

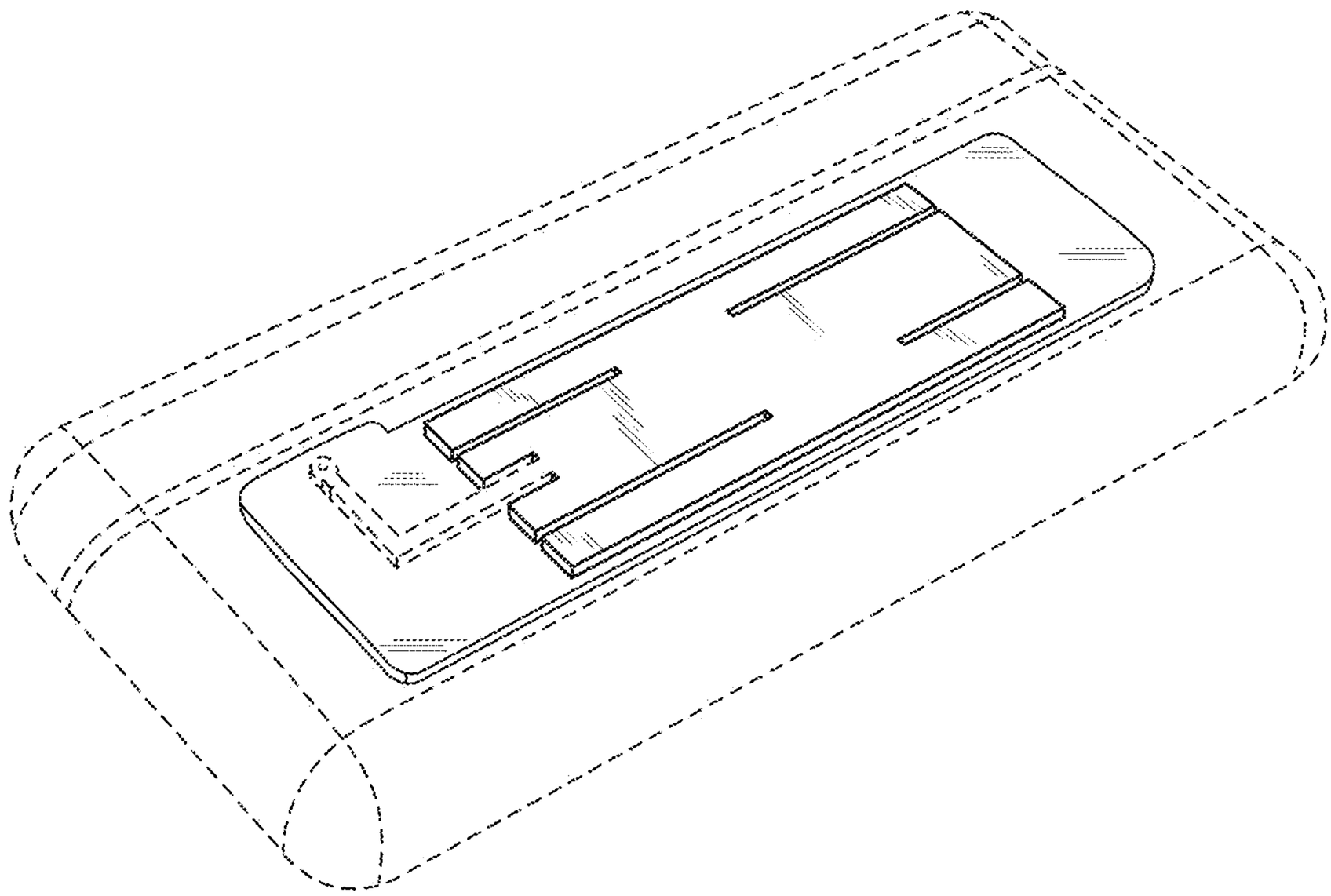

FIG. 1

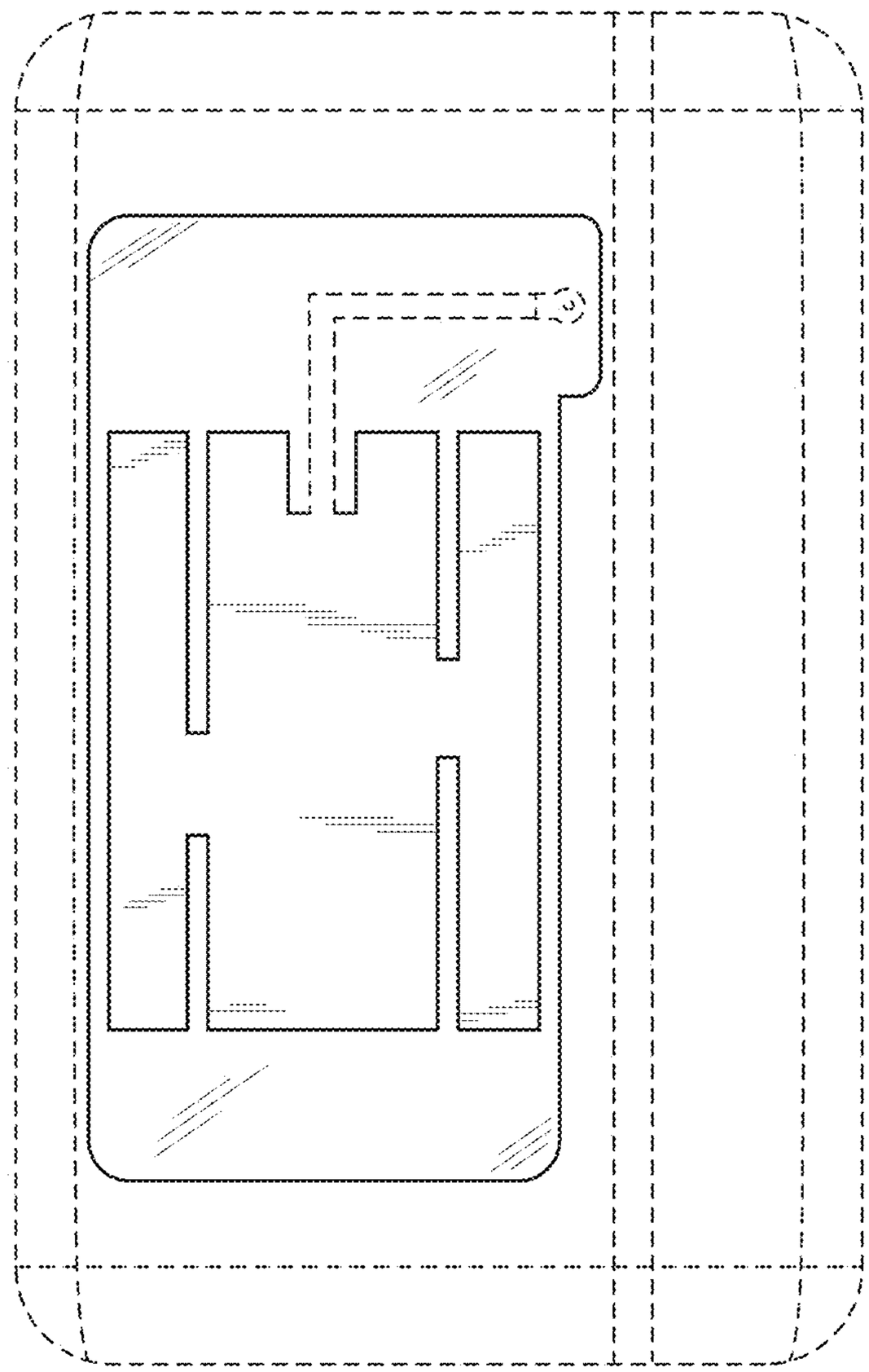

FIG. 2

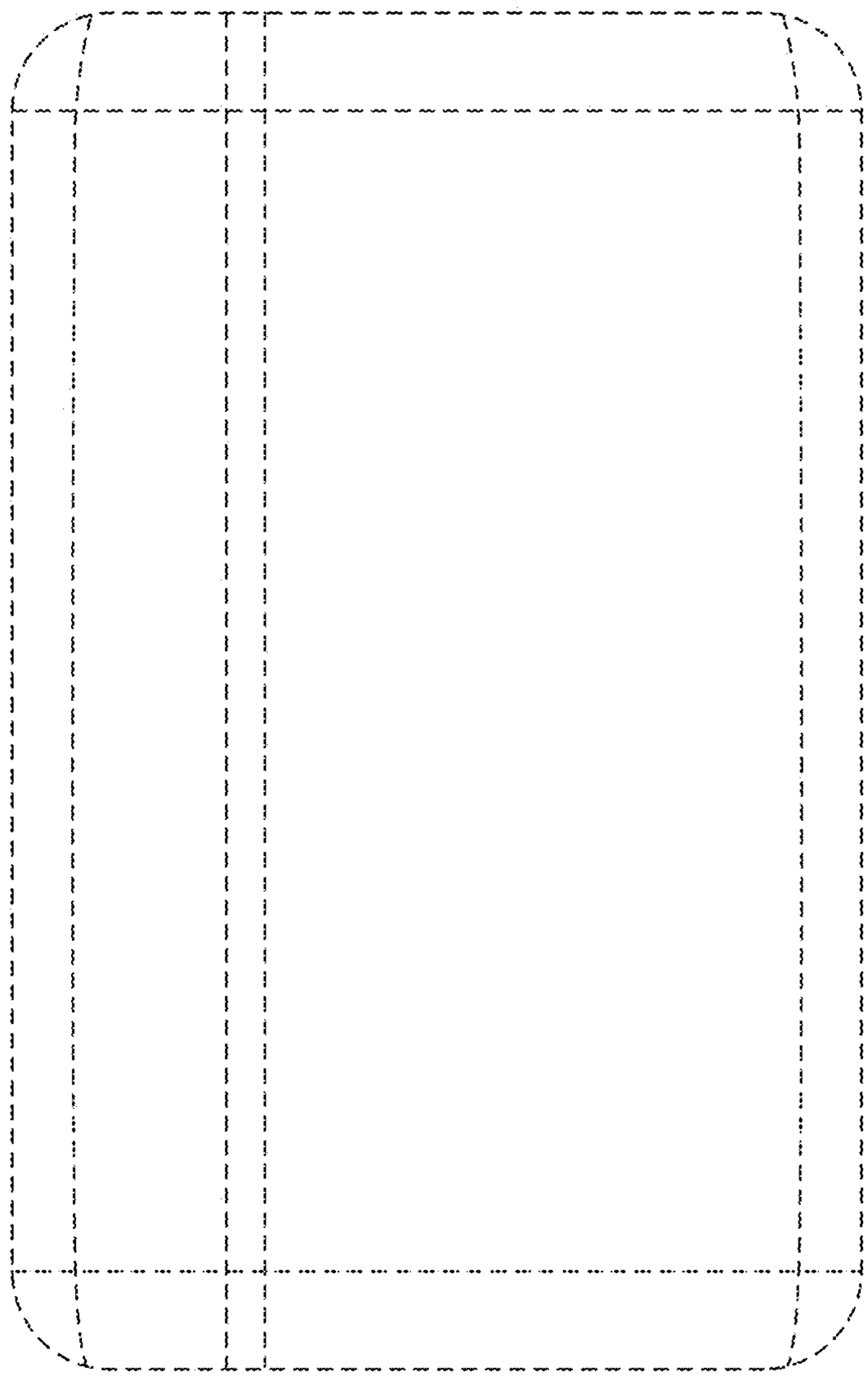

FIG. 3

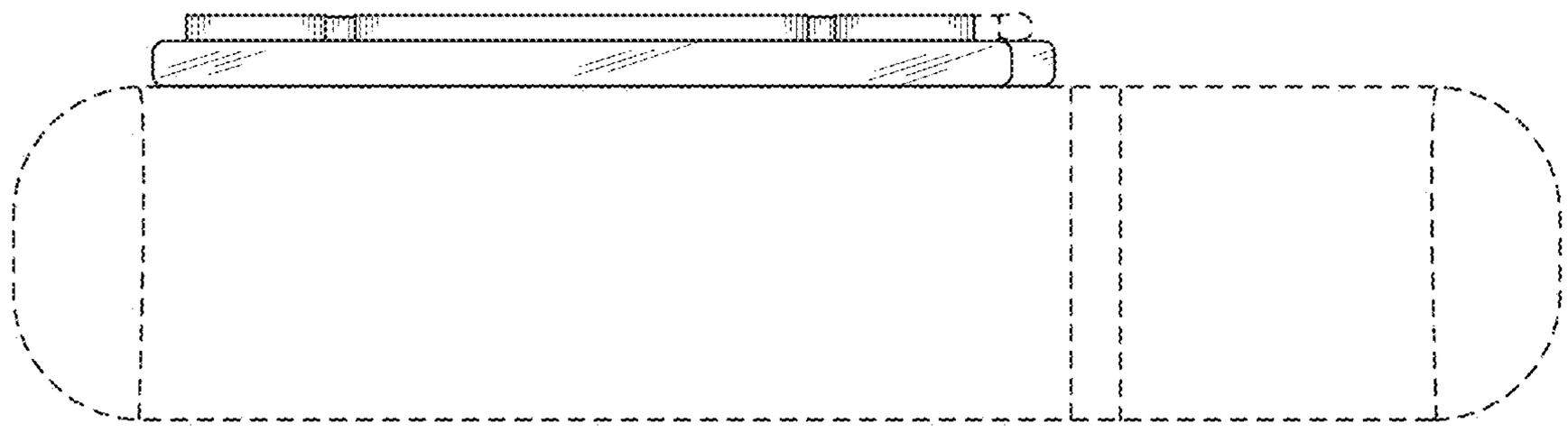

FIG. 4

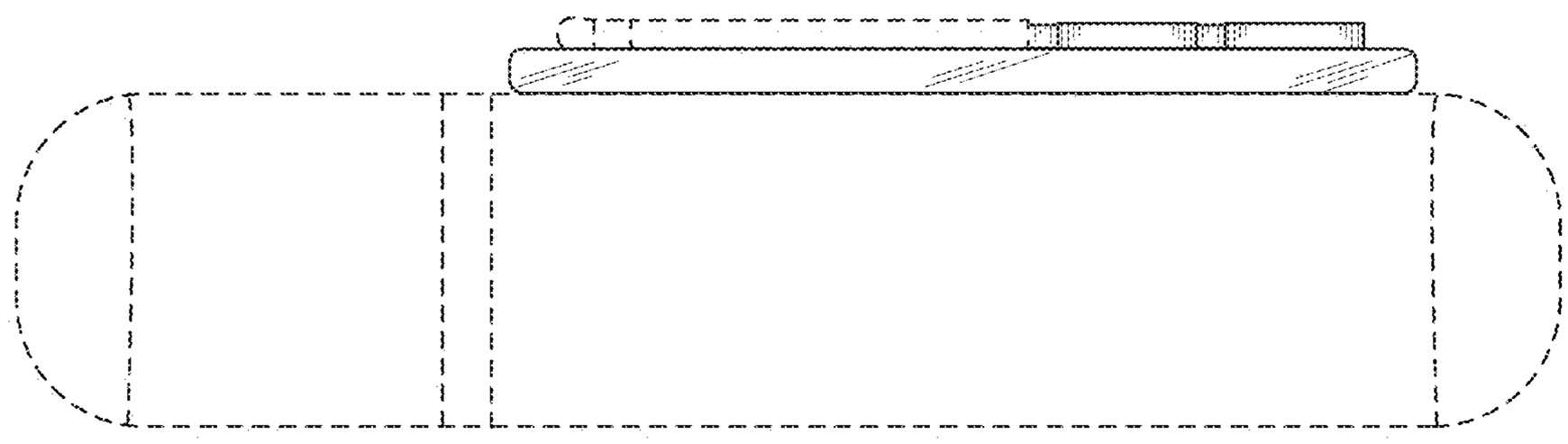

FIG. 5

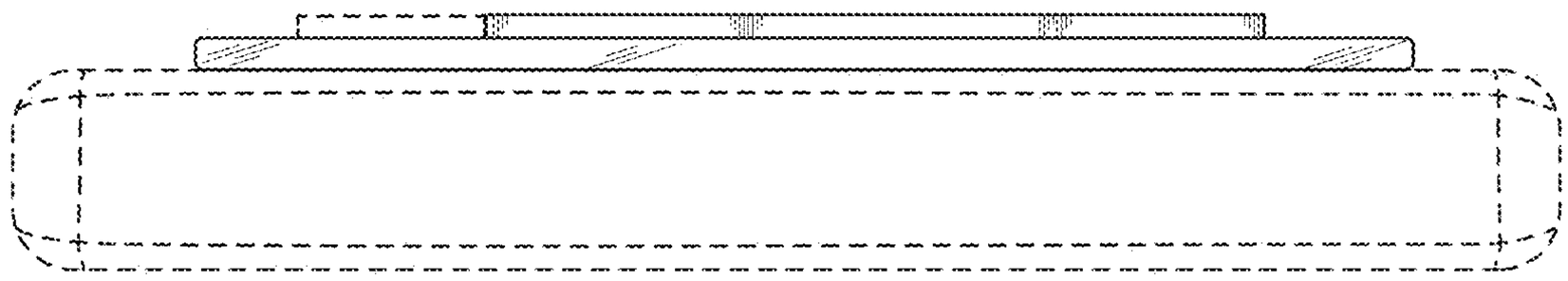

FIG. 6

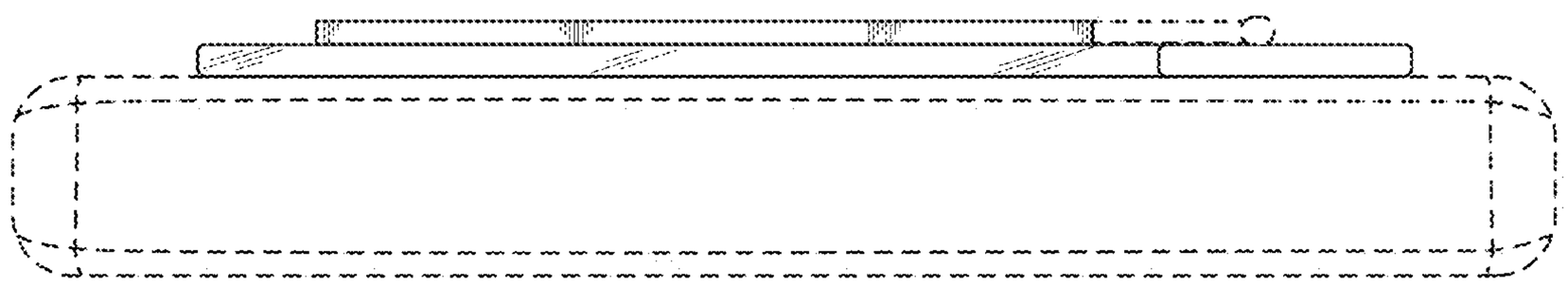

FIG. 7