US00D947979S

(12) United States Design Patent

Cabahug et al.

(10) Patent No.: US D947,979 S
(45) Date of Patent: ** Apr. 5, 2022

(54) **ELECTRICAL CONTACT STRIP FOR A POWERED RAIL**

(71) Applicant: **T-Worx Holdings, LLC**, Sterling, VA (US)

(72) Inventors: **Eric F. Cabahug**, Fairfax, VA (US); **Tyler J. Miller**, Dickerson, MD (US); **Tho N. Ngyuen**, Ashburn, VA (US); **Benjamin F. Feldman**, Reston, VA (US)

(73) Assignee: **T-Worx Holdings, LLC**, Sterling, VA (US)

(**) Term: **15 Years**

(21) Appl. No.: **29/709,037**

(22) Filed: **Oct. 10, 2019**

(51) **LOC (13) Cl.** **22-01**

(52) **U.S. Cl.**
USPC **D22/108**

(58) **Field of Classification Search**
USPC D22/100, 103, 108, 109, 110, 199; D21/572, 573, 575
CPC F41A 21/325; F41C 23/04; F41C 23/06; F41C 23/08; F41C 23/10; F41C 23/12; F41C 23/14; F41C 23/16; F41C 23/18; F41C 23/20; F41C 23/22; F41C 7/02; F41C 7/04; F41C 7/06; F41C 7/11; F41C 7/12; F41C 27/00; F41C 27/06
See application file for complete search history.

(56) **References Cited**

U.S. PATENT DOCUMENTS

3,212,051 A * 10/1965 Clewes H01R 9/2408 439/717
6,925,744 B2 * 8/2005 Kincel F41C 23/22 42/71.01
(Continued)

FOREIGN PATENT DOCUMENTS

IL 64932 * 5/2021
IL 66838 * 5/2021
(Continued)

OTHER PUBLICATIONS

Eric B. "The T-Worx Intelligent Rail Platform . . . " TheFirearmBlog.com posted: Feb. 14, 2019 [visited: Aug. 18, 2021] URL: https://www.thefirearmblog.com/blog/2019/02/14/the-t-worx-intelligent-rail-platform-approved-after-u-s-army-tests-some-thoughts/ (Year: 2019).*
(Continued)

Primary Examiner — Barbara Fox
Assistant Examiner — Jessie Anne E Touart
(74) *Attorney, Agent, or Firm* — Merchant & Gould P.C.

(57) **CLAIM**

The ornamental design for an electrical contact strip for a powered rail, as shown and described.

DESCRIPTION

FIG. **1** is an isometric view of the electrical contact strip for a powered rail shown on a firearm;
FIG. **2** is a right isometric view thereof separate from the firearm;
FIG. **3** is a left isometric view thereof;
FIG. **4** is a right side view thereof;
FIG. **5** is a left side view thereof;
FIG. **6** is a top view thereof;
FIG. **7** is a bottom view thereof;
FIG. **8** is a front view of thereof; and,
FIG. **9** is a rear view of thereof.
The evenly spaced dashed line showing of a firearm represents an exemplary environment and forms no part of the claimed design.

1 Claim, 5 Drawing Sheets

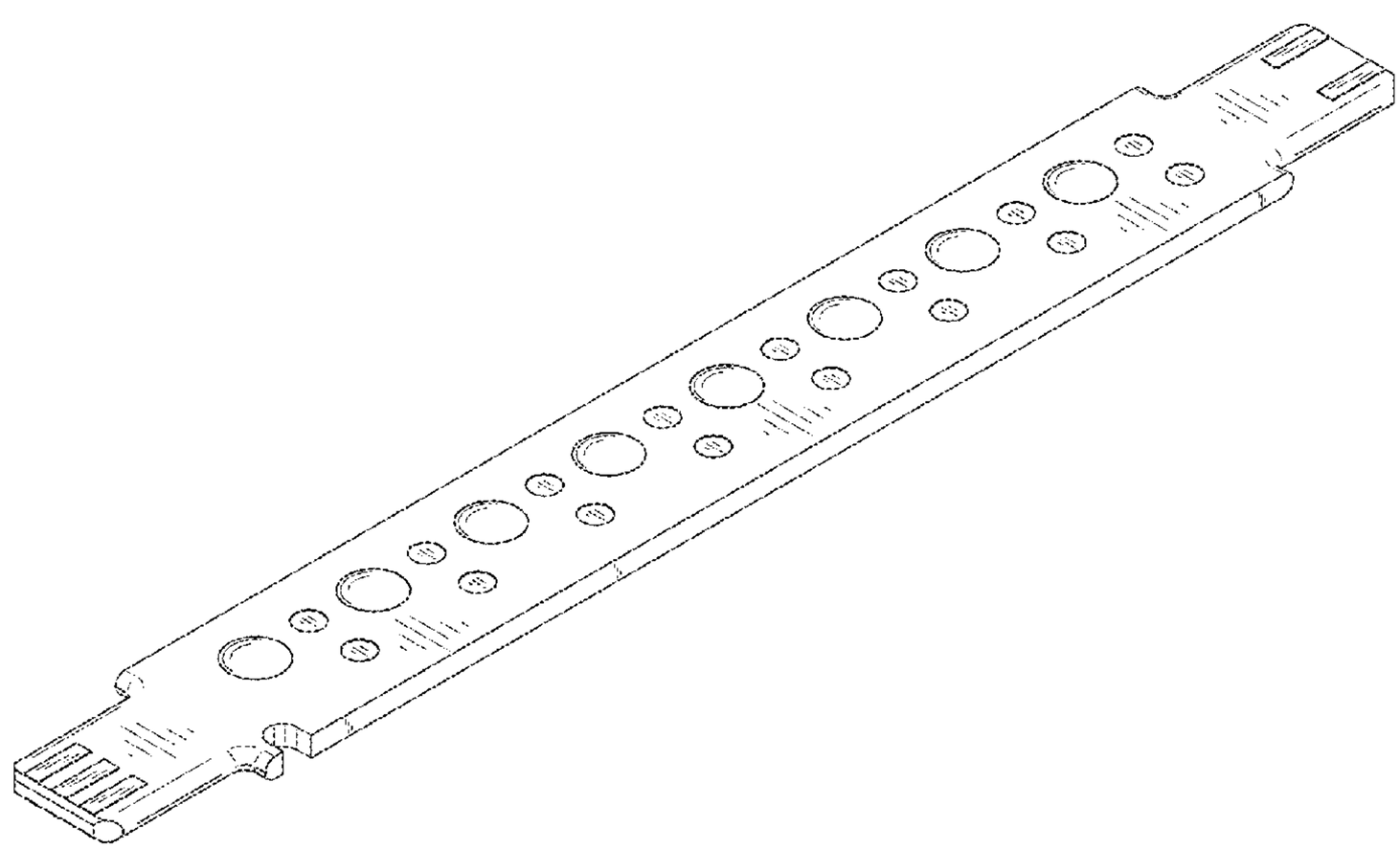

(56) **References Cited**

U.S. PATENT DOCUMENTS

8,146,282	B2 *	4/2012	Cabahug	F41C 27/00 42/85
8,151,505	B2 *	4/2012	Thompson	F41G 11/003 42/84
8,322,064	B2 *	12/2012	Cabahug	F41C 27/00 42/85
8,397,418	B2 *	3/2013	Cabahug	F41C 23/22 42/85
8,443,539	B2 *	5/2013	Cabahug	F41C 27/00 42/85
8,448,368	B2 *	5/2013	Cabahug	F41G 11/003 42/85
8,490,313	B2 *	7/2013	Frascati	F41G 11/003 42/90
8,516,731	B2 *	8/2013	Cabahug	F41G 11/003 42/84
D707,782	S *	6/2014	Burnham	D22/108
9,285,185	B2 *	3/2016	Cabahug	F41C 27/00
9,506,708	B2 *	11/2016	Peterson	F41C 23/04
10,458,754	B2 *	10/2019	Miller	F41C 23/22
10,976,131	B1 *	4/2021	Cabahug	F41C 23/22
2016/0298926	A1 *	10/2016	Jen	F41C 27/00
2020/0124383	A1 *	4/2020	Miller	F41G 11/003

FOREIGN PATENT DOCUMENTS

IL	66839	*	5/2021
IL	66840	*	5/2021
IL	66841	*	5/2021

OTHER PUBLICATIONS

Mayfield, Mandy and Connie Lee "Intelligent-Rail' Software Destined for Next-Gen Squad Weapon" nationaldefensemagazine.org posted: Jul. 17, 2019 [site visited Aug. 18, 2021] URL: https://www.nationaldefensemagazine.org/articles/2019/7/17/intelligent-rail-software-destined-for-next-gen-squad-weapon (Year: 2019).*

* cited by examiner

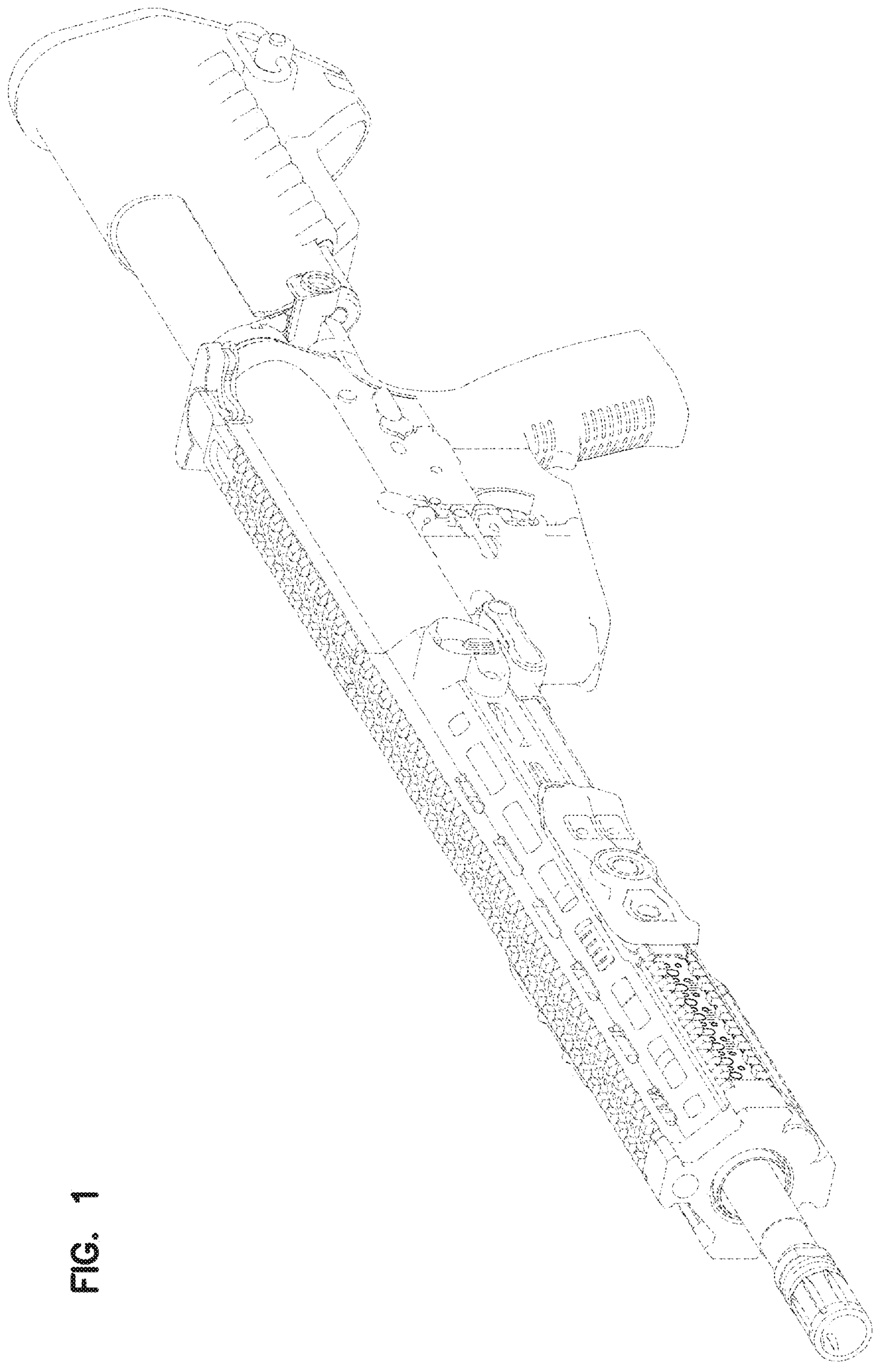

FIG. 1

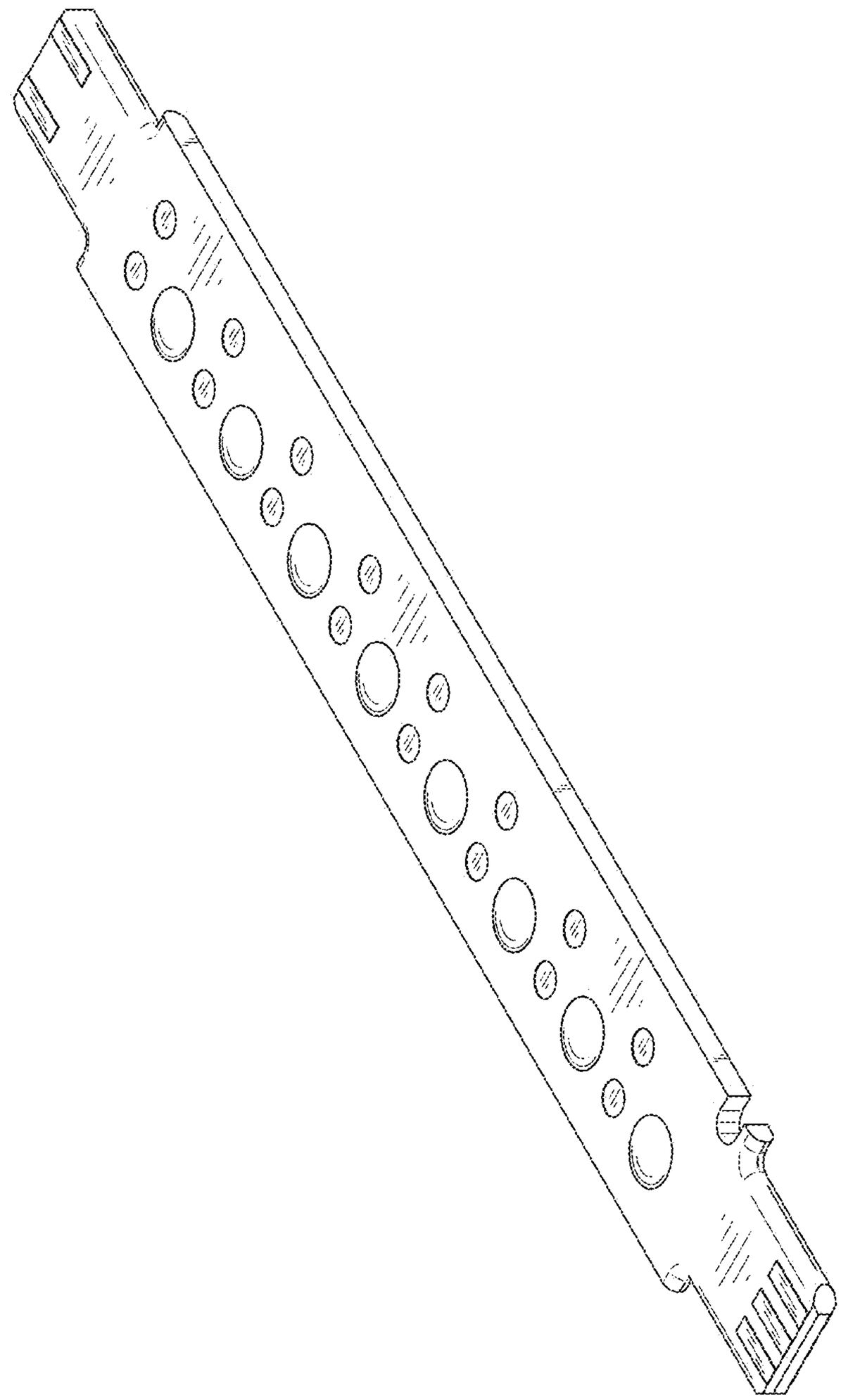

FIG. 2

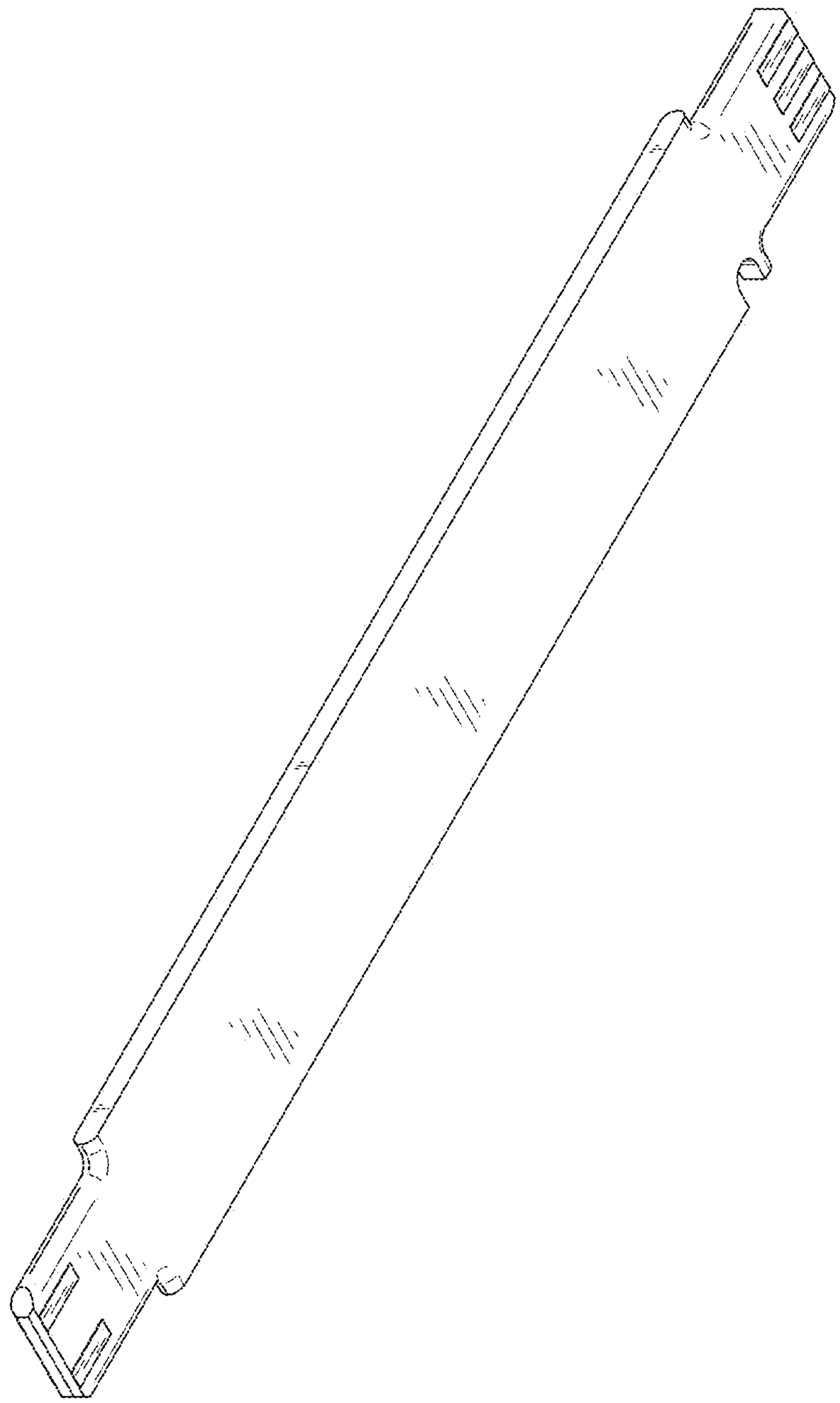

FIG. 3

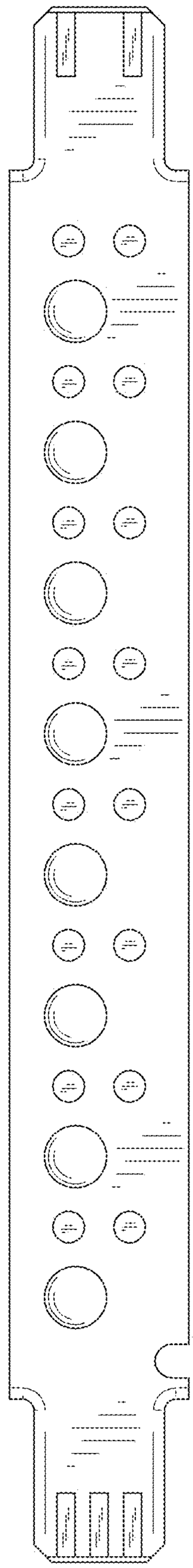

FIG. 4

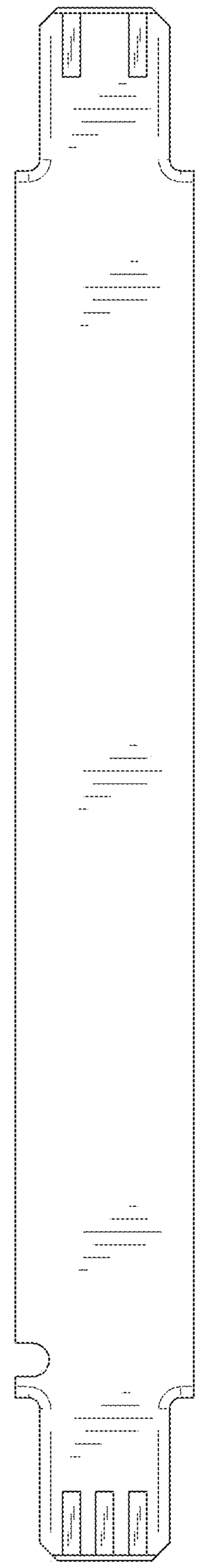

FIG. 5

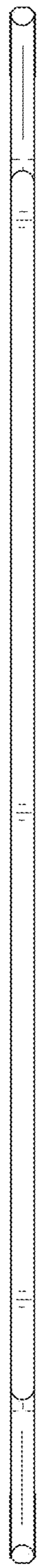

FIG. 6

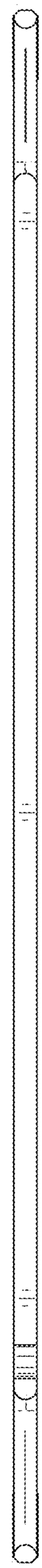

FIG. 7

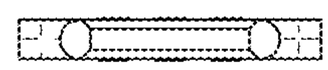

FIG. 8

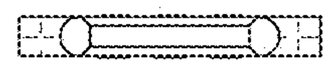

FIG. 9