US00D947714S

(12) United States Design Patent
Bae

(10) Patent No.: US D947,714 S
(45) Date of Patent: ** Apr. 5, 2022

(54) **FLOWERPOT**

(71) Applicant: **Moon Ok Bae**, Seoul (KR)

(72) Inventor: **Moon Ok Bae**, Seoul (KR)

(**) Term: **15 Years**

(21) Appl. No.: **29/731,574**

(22) Filed: **Apr. 16, 2020**

(30) **Foreign Application Priority Data**

Oct. 31, 2019 (KR) 30-2019-0051784

(51) **LOC (13) Cl.** **11-02**

(52) **U.S. Cl.**
USPC **D11/152**

(58) **Field of Classification Search**
USPC D11/143–156, 164; D6/403–405, D6/556–558; D7/507, 509, 523, 584, 587
CPC . A01G 9/02; A01G 9/021; A01G 9/04; A01G 27/003; A01G 31/02; A01G 31/06
See application file for complete search history.

(56) **References Cited**

U.S. PATENT DOCUMENTS

2,675,954 A * 4/1954 Vogel B65D 81/3869 220/592.17
D241,462 S * 9/1976 Criscitbello D11/152
5,044,119 A * 9/1991 Hougard A47G 7/08 47/75
5,174,061 A * 12/1992 Dambricourt A47G 7/08 47/72
D407,043 S * 3/1999 Kojima D11/164
5,983,566 A * 11/1999 Enderlein A01G 9/02 47/66.7
D444,672 S * 7/2001 Miura D7/507
D444,735 S * 7/2001 Ratnayake D11/153
D461,432 S * 8/2002 Carlson D11/152
6,594,953 B2 * 7/2003 Weder A01G 9/026 47/75
D485,784 S * 1/2004 Fan D11/143
6,705,046 B2 * 3/2004 Weder A47G 7/085 206/423
D531,081 S * 10/2006 Fan D11/143
D572,168 S * 7/2008 Kurtz D11/152
8,268,417 B2 * 9/2012 Helou, Jr. B65D 25/14 428/34.2
D669,814 S * 10/2012 Plucinski D11/152
8,911,843 B2 * 12/2014 Dellinger B65D 65/466 428/36.4
D746,641 S * 1/2016 Panone D7/602
9,301,630 B2 * 4/2016 Guo B65D 25/34
D781,932 S * 3/2017 Yoshikawa D15/80
9,951,248 B2 * 4/2018 Samet C09D 5/00
D827,486 S * 9/2018 Quinlan D11/143
D848,266 S * 5/2019 Yi D9/500
D852,086 S * 6/2019 Crosby D11/143
D853,271 S * 7/2019 Crosby D11/143
D869,951 S * 12/2019 Yi D9/500
D879,658 S * 3/2020 Ockenfeld D11/152
(Continued)

Primary Examiner — Elizabeth A. Albert
(74) *Attorney, Agent, or Firm* — Lex IP Meister, PLLC

(57) **CLAIM**

The ornamental design for a flowerpot, as shown and described.

DESCRIPTION

FIG. **1** is a perspective view of a flowerpot showing our new design;
FIG. **2** is a front elevational view thereof;
FIG. **3** is a rear elevational view thereof;
FIG. **4** is a left side elevational view thereof;
FIG. **5** is a right side elevational view thereof;
FIG. **6** is a top plan view thereof;
FIG. **7** is a bottom plan view thereof; and,
FIG. **8** is a cross-sectional view that is taken along a line VIII-VIII of FIG. **6**.

1 Claim, 8 Drawing Sheets

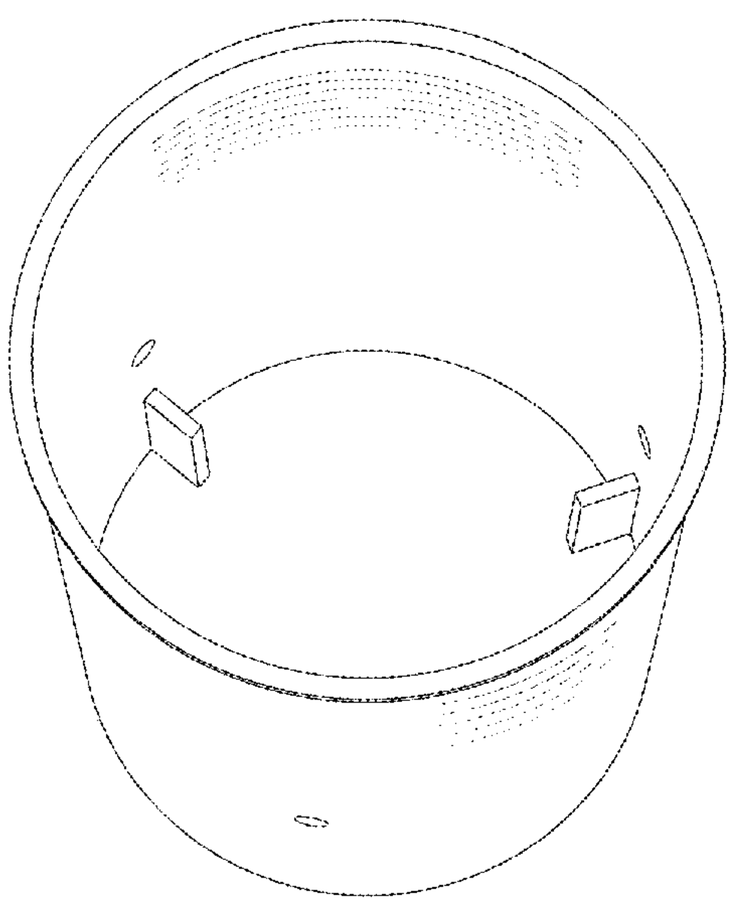

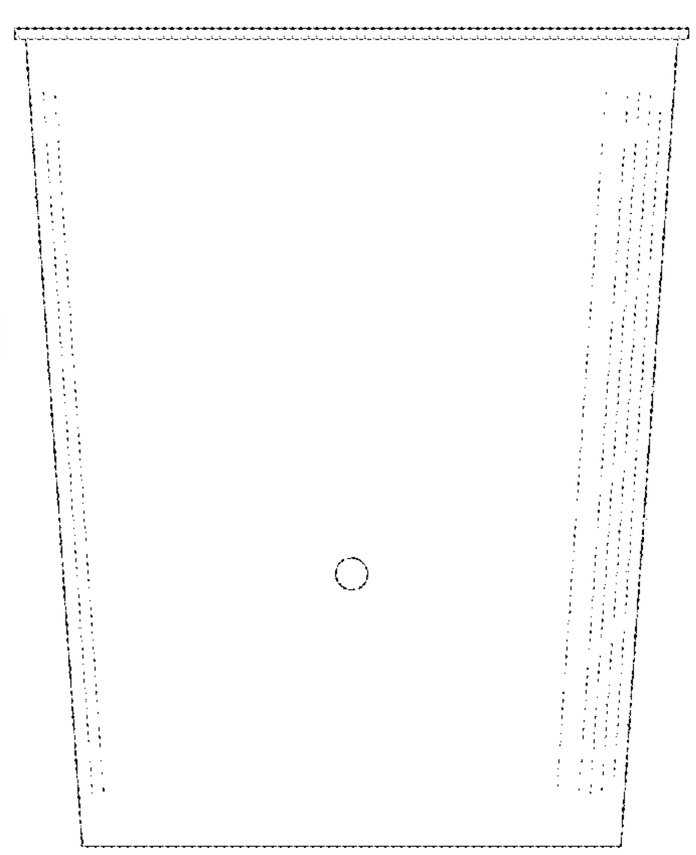

(56) **References Cited**

U.S. PATENT DOCUMENTS

2012/0097602	A1*	4/2012	Tedford	B65D 65/466 210/500.1
2013/0098916	A1*	4/2013	Charles	B65D 71/70 220/507
2013/0209619	A1*	8/2013	Mahlich	B65D 1/26 426/115
2018/0237655	A1*	8/2018	Samet	A01G 9/021
2018/0352753	A1*	12/2018	Thompson	A01G 9/006
2020/0077606	A1*	3/2020	Hung	A01G 9/02

* cited by examiner

FIG. 1

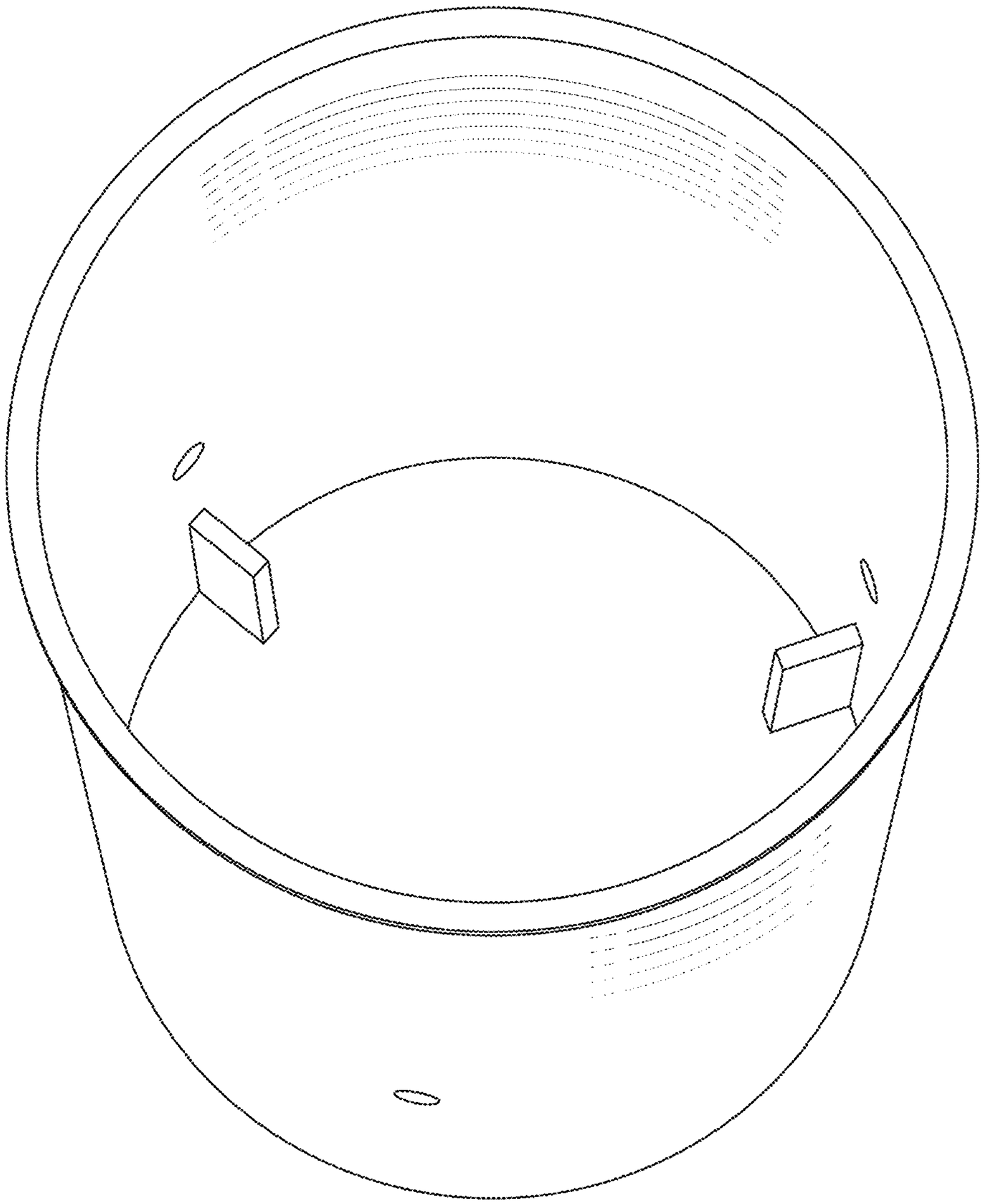

FIG. 2

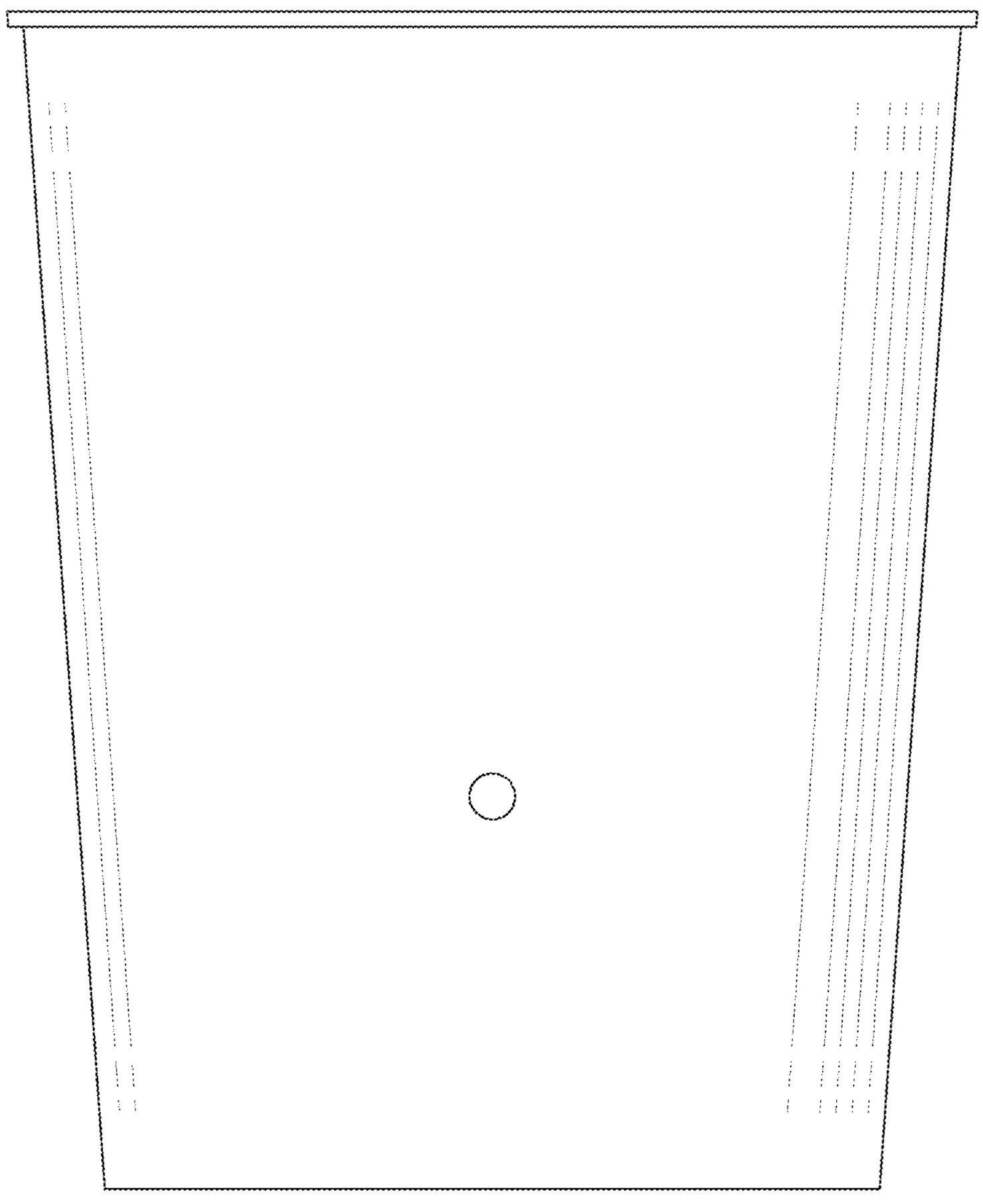

FIG. 3

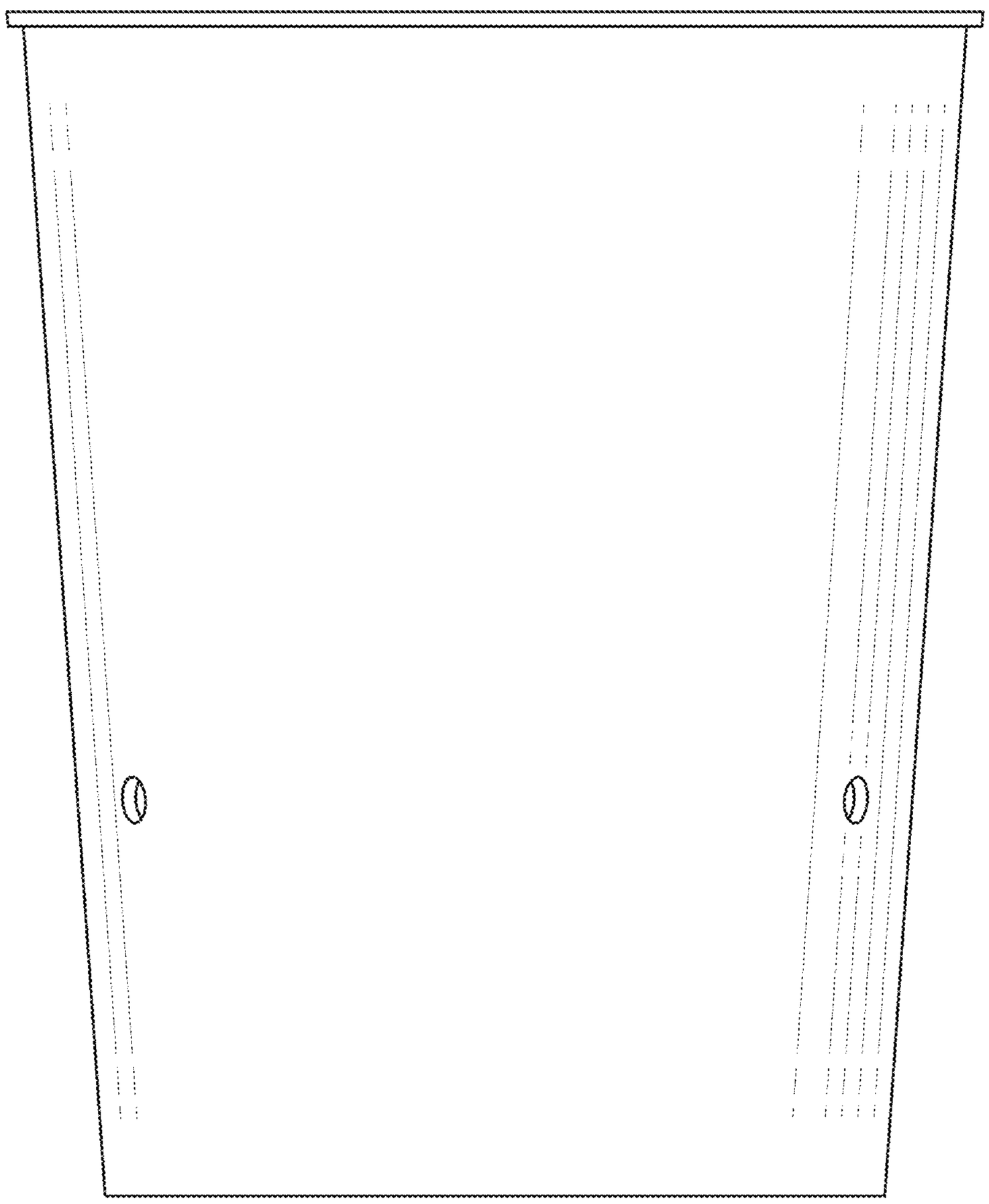

FIG. 4

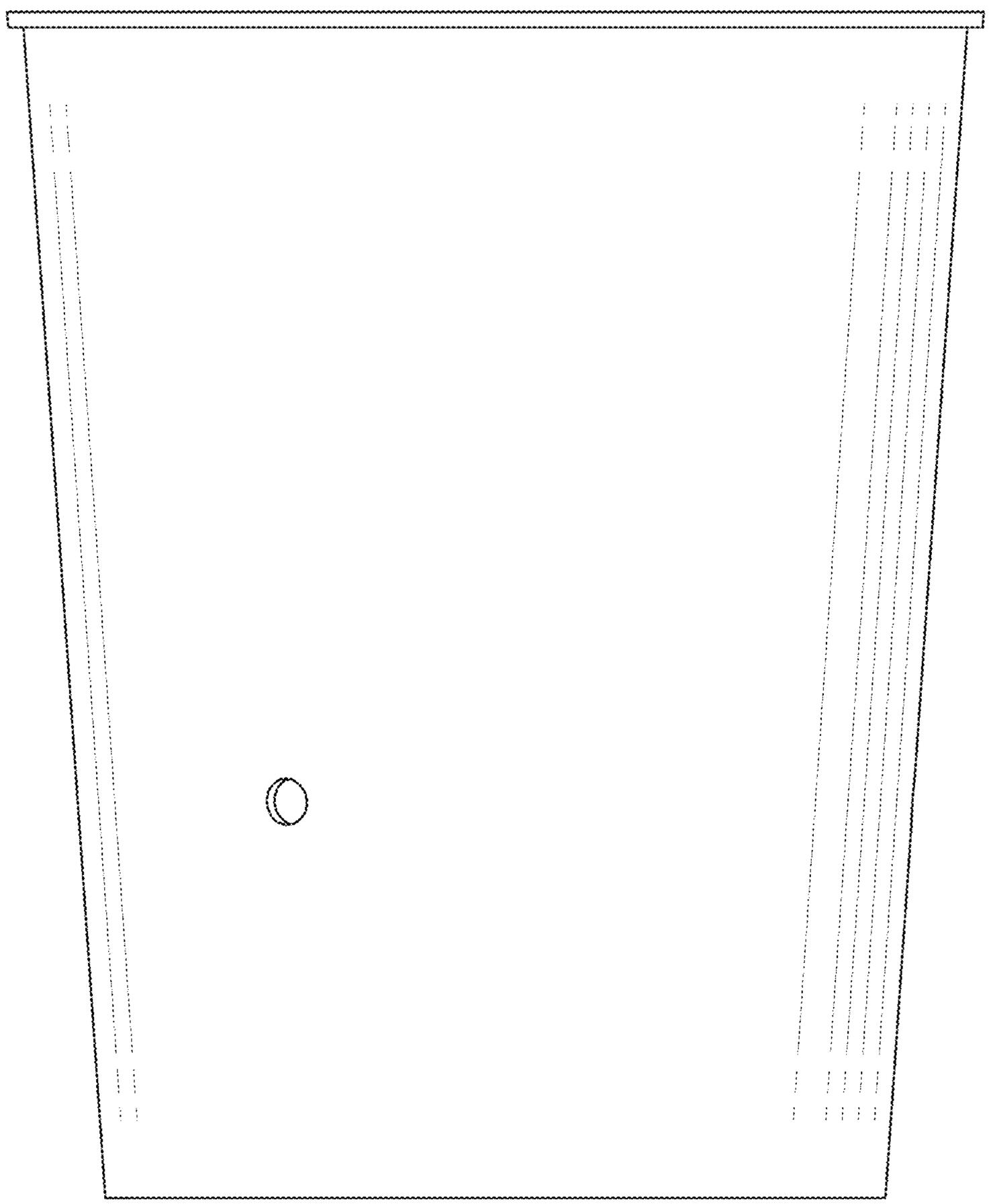

FIG. 5

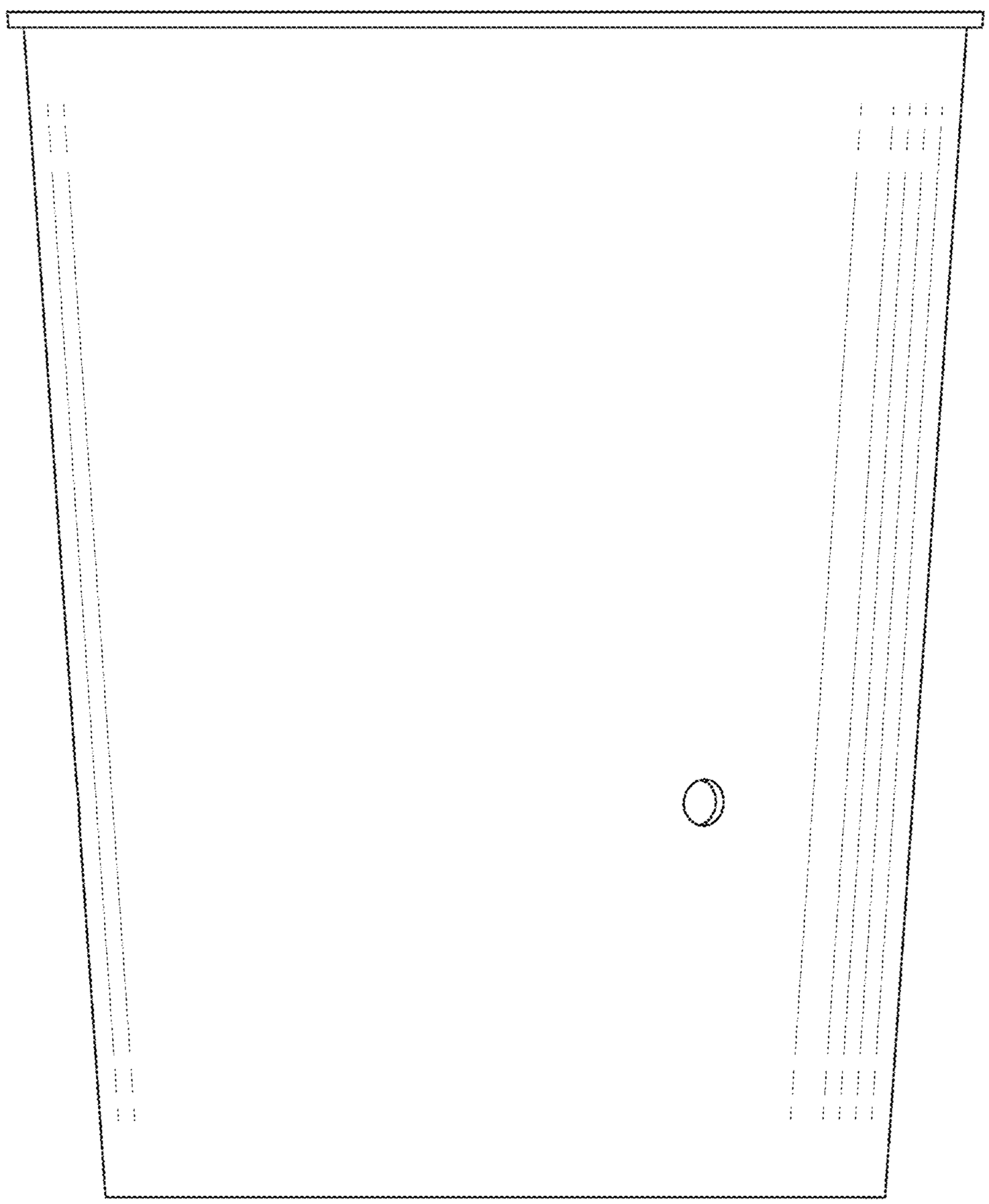

FIG. 6

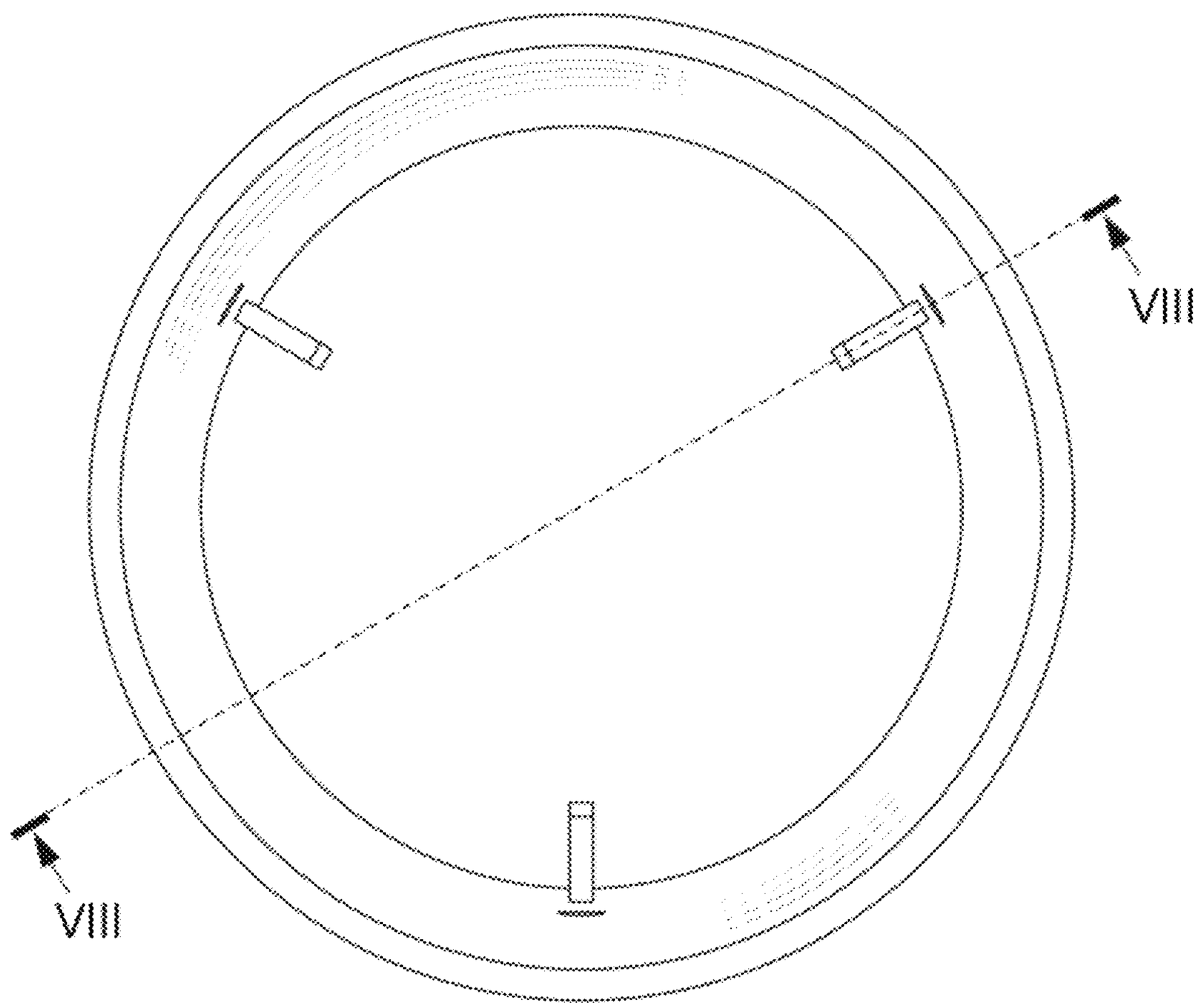

FIG. 7

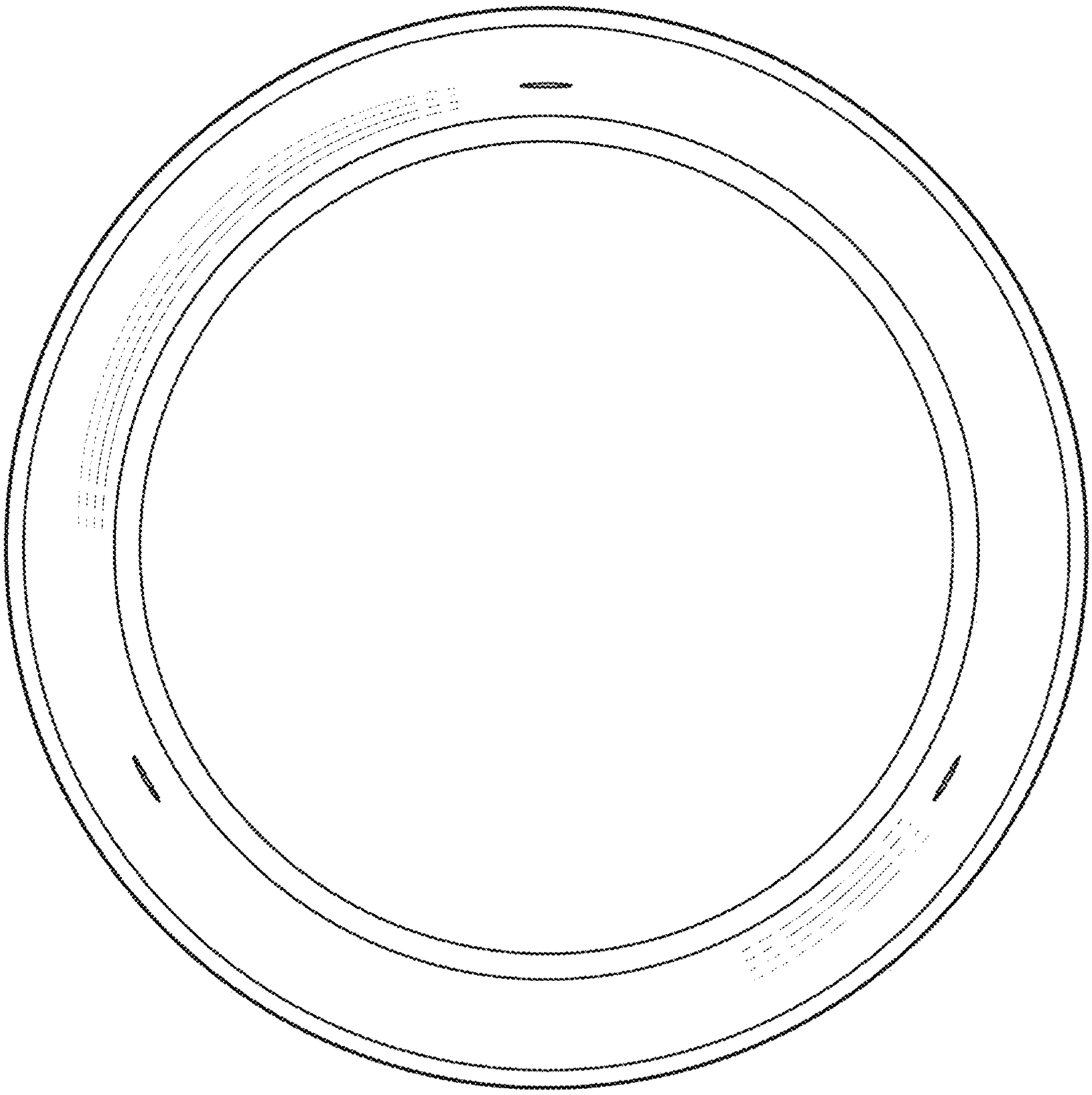
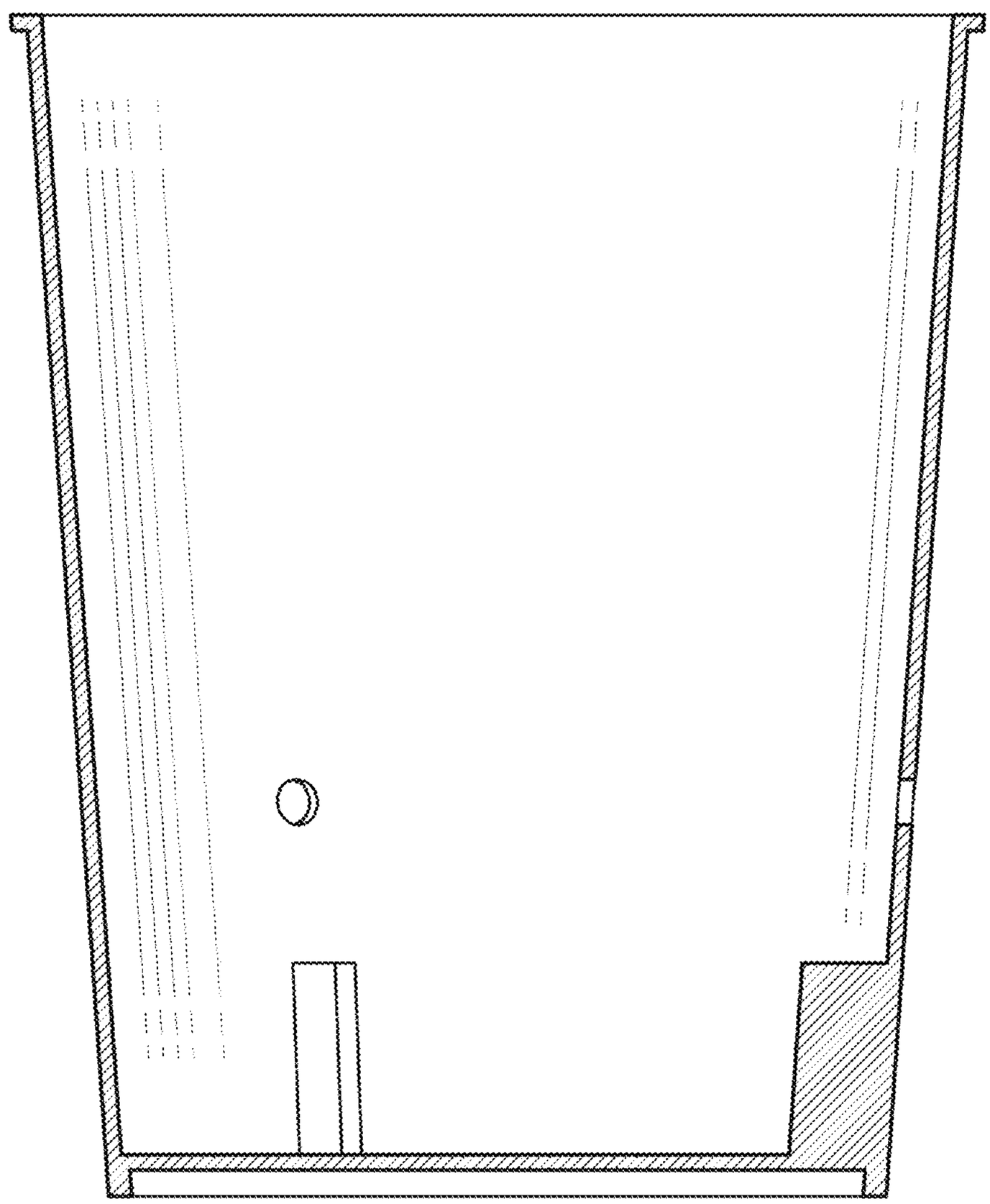
FIG. 8