US00D946805S

(12) United States Design Patent

Wu

(10) Patent No.: US D946,805 S
(45) Date of Patent: ** Mar. 22, 2022

(54) **SOLAR LIGHT**

(71) Applicant: **Beier Wu**, Zhejiang Province (CN)

(72) Inventor: **Beier Wu**, Zhejiang Province (CN)

(**) Term: **15 Years**

(21) Appl. No.: **29/776,372**

(22) Filed: **Mar. 30, 2021**

(51) **LOC (13) Cl.** **26-05**

(52) **U.S. Cl.**
USPC **D26/67**

(58) **Field of Classification Search**
USPC D26/40, 41, 67–70, 85
CPC F21S 8/03; F21S 8/033; F21S 8/036; F21S 8/081; F21S 9/037; F21W 2111/02; F21W 2111/023; F21W 2131/109
See application file for complete search history.

(56) **References Cited**

U.S. PATENT DOCUMENTS

D445,937	S	*	7/2001	Sanoner	D26/68
D465,296	S	*	11/2002	DiPasquale	D26/67
D553,284	S	*	10/2007	Bucher	D26/67
D553,286	S	*	10/2007	Chung	D26/67
D563,585	S	*	3/2008	Lee	D26/67
D578,239	S	*	10/2008	Milicia	D26/68
D646,833	S	*	10/2011	Chen	D26/85
D663,063	S	*	7/2012	Yang	D26/67
D829,357	S	*	9/2018	Chen	D26/68
D851,315	S	*	6/2019	Chen	D26/67
D899,658	S		10/2020	Wang	
D931,511	S	*	9/2021	Yan	F21L 4/00 D26/40
11,118,762	B1	*	9/2021	Zhang	F21V 17/164
2007/0285023	A1	*	12/2007	Cooper	F21S 9/037 315/149

OTHER PUBLICATIONS

LED light flame Flickering Tiki Torch solar light, Model No. BTK025, available from alibaba.com. Visited Jan. 25, 2022. (Year: 2022).*

LED Solar Flame Light, available from beauxhomegoods.com. Visited Jan. 25, 2022. (Year: 2022).*

LED Solar 2 Pack Flame Dancing Torch Lights, SKU: GS-GFL-930. Available from ledglobalsupply.com as early as Feb. 5, 2021. (Year: 2021).*

* cited by examiner

Primary Examiner — Clare E Heflin

(57) **CLAIM**

The ornamental design for a solar light, as shown and described.

DESCRIPTION

FIG. **1** is a front and top perspective view of a solar light, showing my new design;
FIG. **2** is a rear and bottom perspective view thereof;
FIG. **3** is a front elevation view thereof;
FIG. **4** is a rear elevation view thereof;
FIG. **5** is a left side elevation view thereof;
FIG. **6** is a right side elevation view thereof;
FIG. **7** is a top plan view thereof;
FIG. **8** is a bottom plan view thereof; and,
FIG. **9** is an enlarged view of a portion labeled, 'FIG. **9**' in FIG. **1**.
The dash dot dash lines in FIGS. **1** and **9** are for the purpose of depicting the cut line of the enlarged view and form no part of the claim.

1 Claim, 9 Drawing Sheets

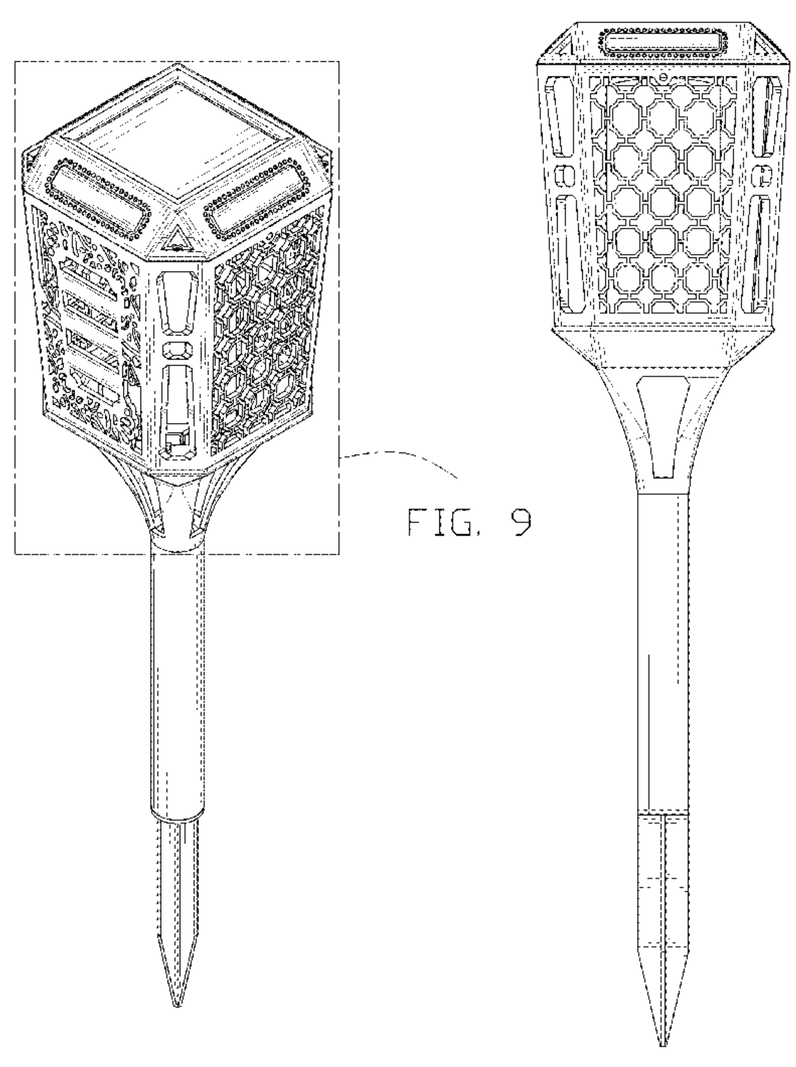

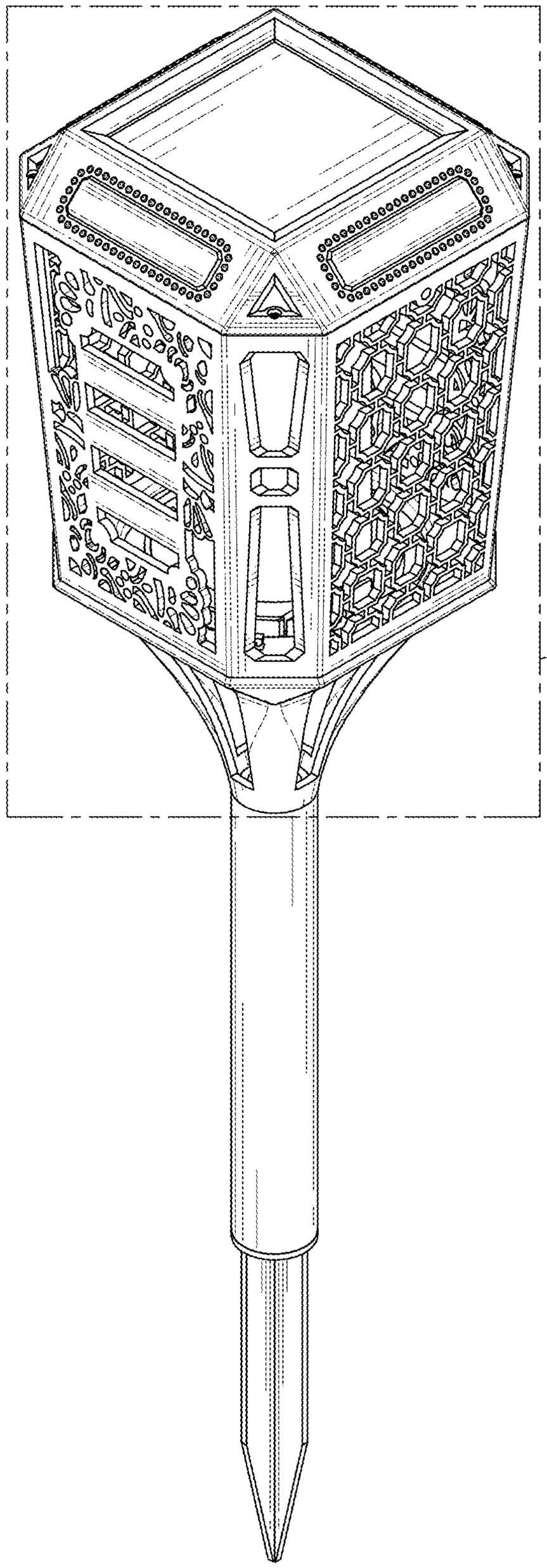

FIG. 9

FIG. 1

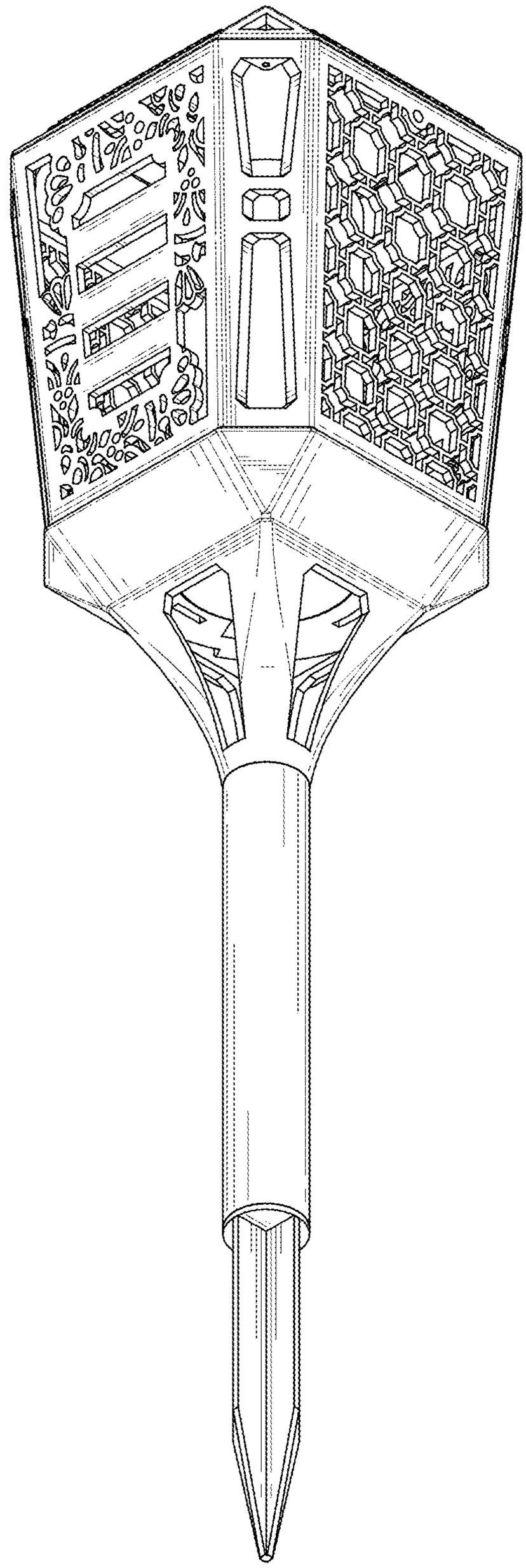

FIG. 2

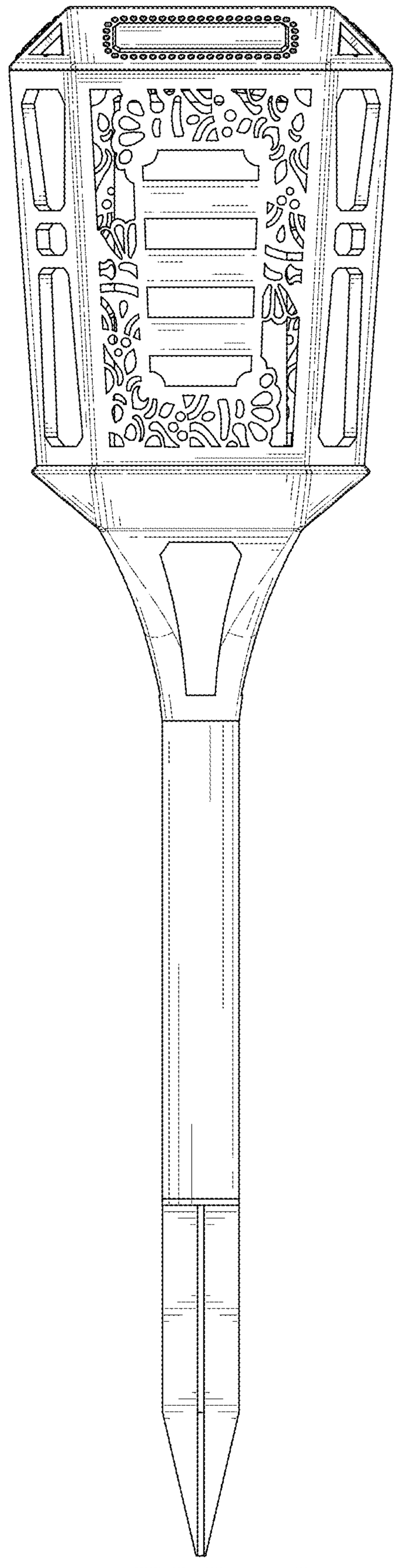

FIG. 3

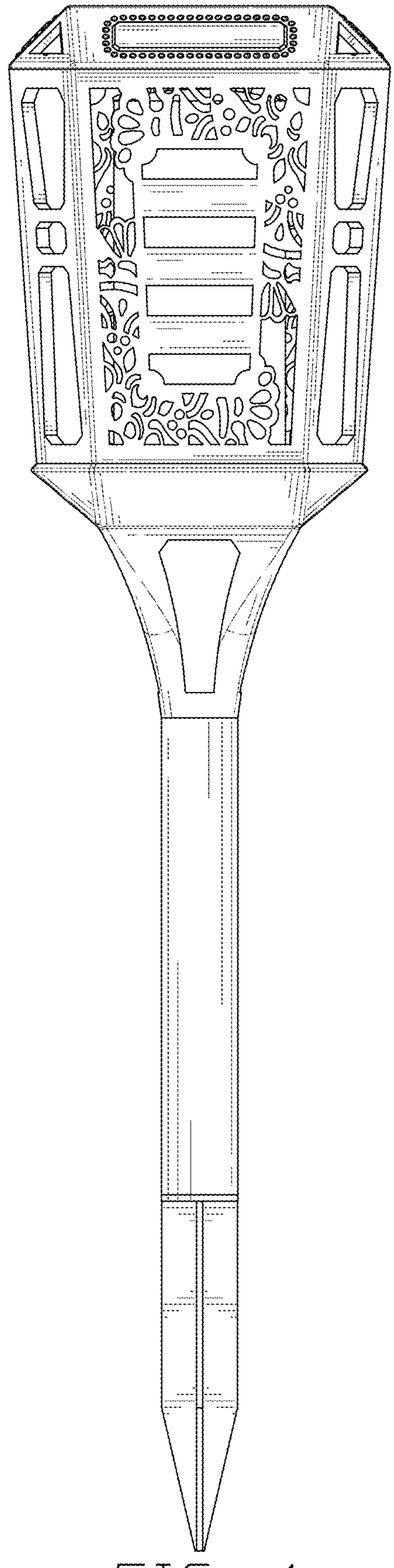

FIG. 4

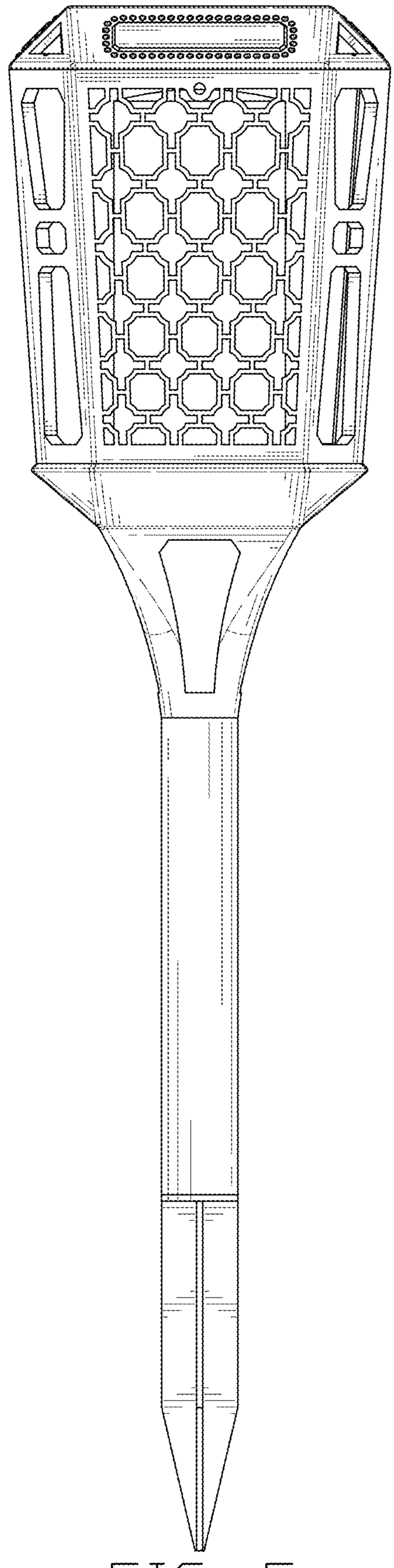

FIG. 5

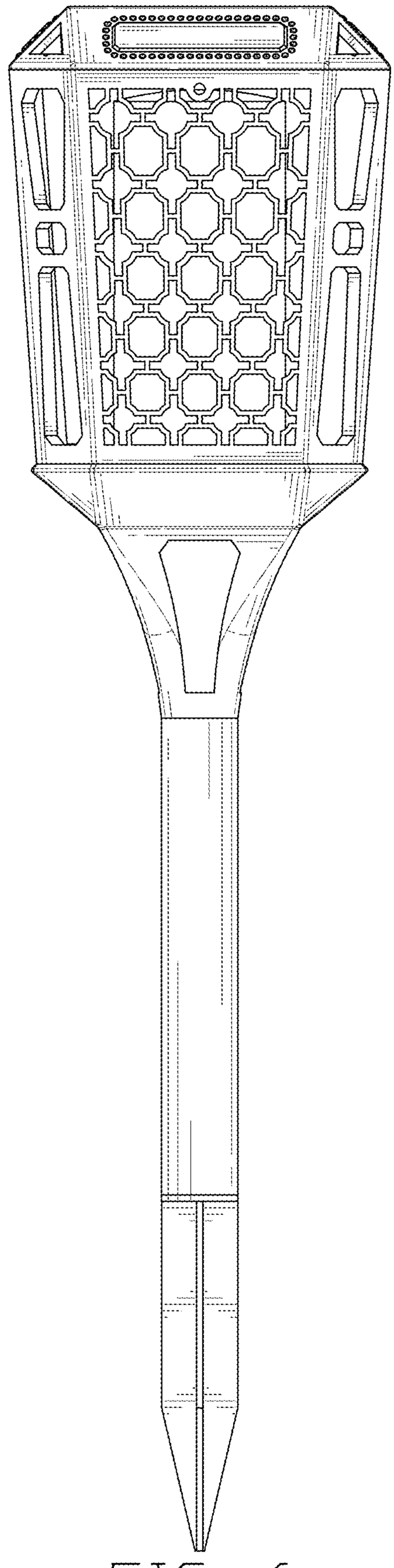

FIG. 6

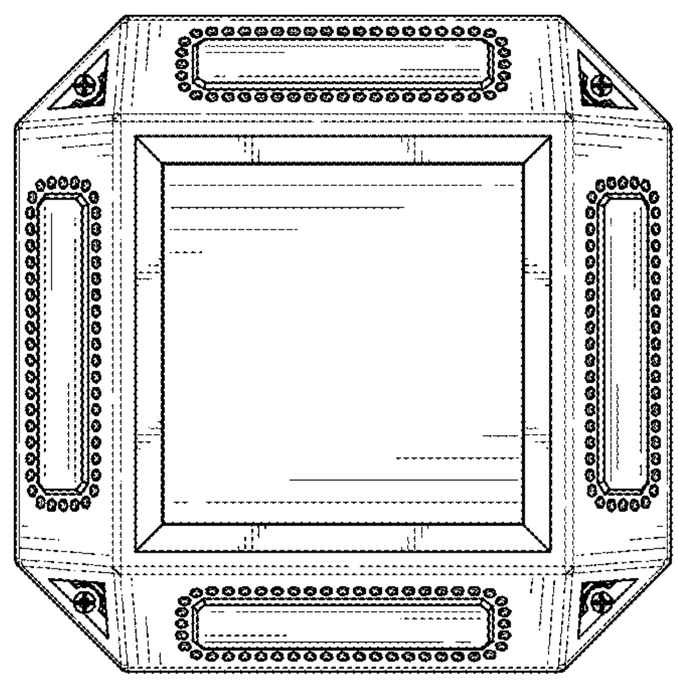

FIG. 7

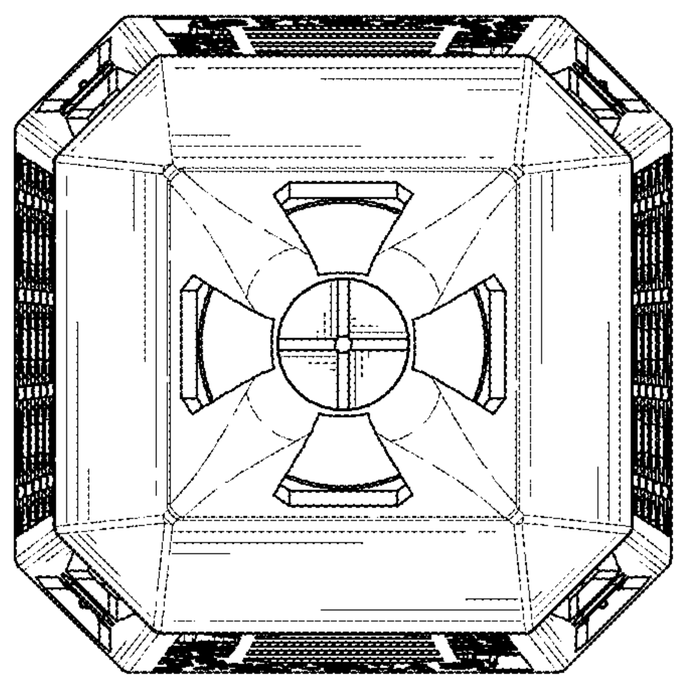

FIG. 8

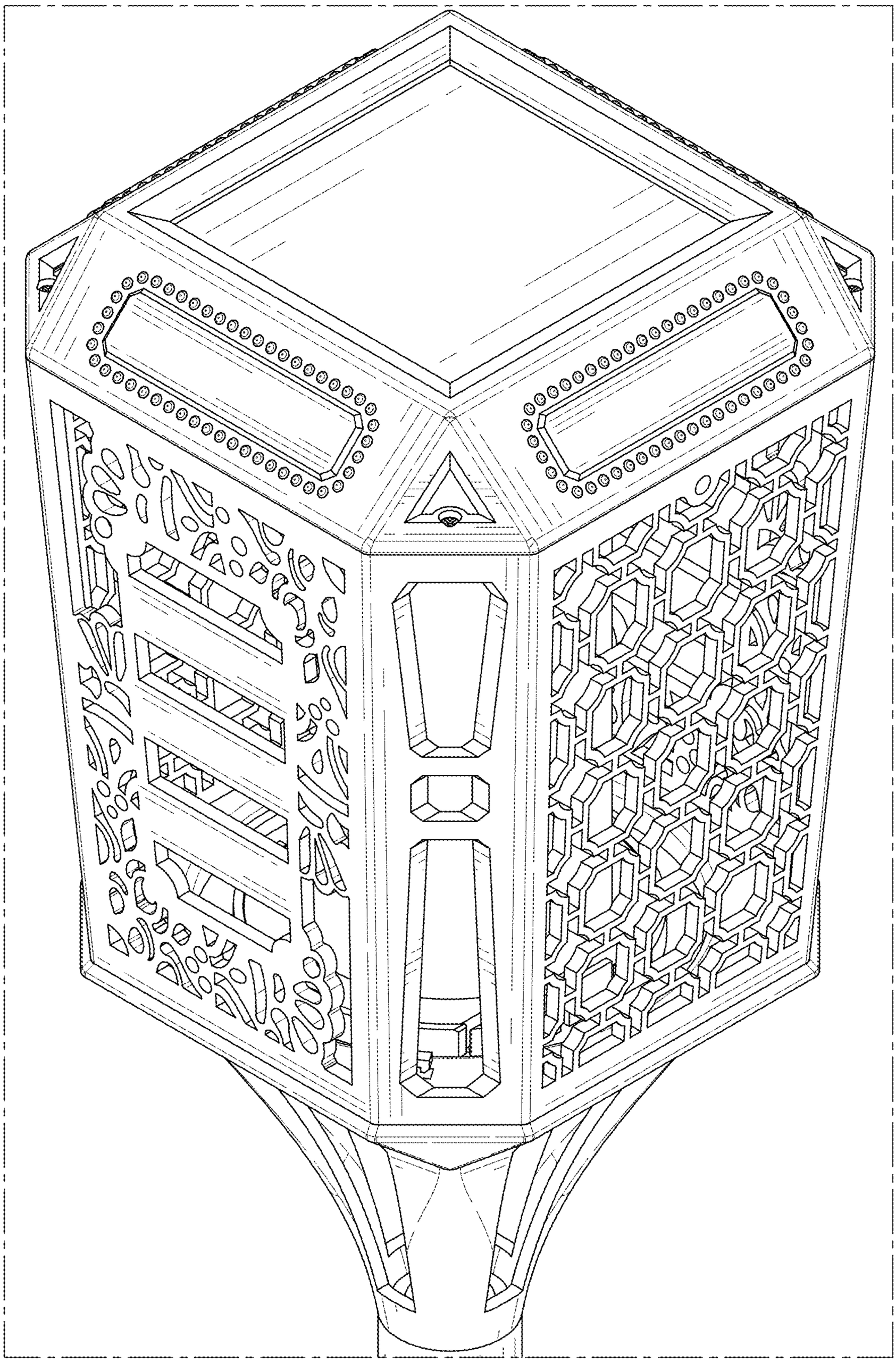

FIG. 9