US00D945981S

(12) United States Design Patent

Rois

(10) Patent No.: US D945,981 S
(45) Date of Patent: ** Mar. 15, 2022

(54) **AUDIO HEADPHONES**

(71) Applicant: **Stephen John Rois**, St. Louis, MO (US)

(72) Inventor: **Stephen John Rois**, St. Louis, MO (US)

(**) Term: **15 Years**

(21) Appl. No.: **29/807,530**

(22) Filed: **Sep. 13, 2021**

Related U.S. Application Data

(62) Division of application No. 29/721,807, filed on Jan. 23, 2020, now Pat. No. Des. 933,041.

(51) **LOC (13) Cl.** **14-01**

(52) **U.S. Cl.**
USPC **D14/205**

(58) **Field of Classification Search**
USPC D14/205, 206, 188, 192; D29/112; 2/209; 381/380, 381, 370, 371, 372; 455/90.3, 575.1, 569.1
CPC H04R 25/00; H04R 25/02; H04R 1/1066; H04R 1/1016; H04R 5/033; H04R 5/0335; H04R 1/10; H04R 1/105; H04R 1/008; H04R 1/1083; H04R 1/1091
See application file for complete search history.

(56) **References Cited**

U.S. PATENT DOCUMENTS

3,073,410	A *	1/1963	Gongoll	H04R 1/1008 2/209
3,141,221	A	7/1964	Faulls, Jr.	
3,220,505	A *	11/1965	Hargrave	H04M 1/05 181/129
D215,375	S	9/1969	Doggert	
D227,742	S	7/1973	Logsdon	

(Continued)

FOREIGN PATENT DOCUMENTS

EM	0080233450002	6/2020

OTHER PUBLICATIONS

U.S. Appl. No. 29/721,807, filed Jan. 23, 2020.

Primary Examiner — Paula Allen Greene
(74) *Attorney, Agent, or Firm* — Harness, Dickey & Pierce, P.L.C.; Anthony G. Fussner

(57) **CLAIM**

The ornamental designs for audio headphones, as shown and described.

DESCRIPTION

FIG. **1** is a front perspective view of audio headphones showing the new design;
FIG. **2** is a perspective view thereof;
FIG. **3** is a perspective view thereof;
FIG. **4** is a perspective view thereof;
FIG. **5** is a front view thereof;
FIG. **6** is a back view thereof;
FIG. **7** is a right side view thereof;
FIG. **8** is a left side view thereof;
FIG. **9** is a top view thereof;
FIG. **10** is a bottom view thereof;
FIG. **11** is a perspective view of a second embodiment of audio headphones showing the new design;
FIG. **12** is a perspective view thereof;
FIG. **13** is a perspective view thereof;
FIG. **14** is a perspective view thereof;
FIG. **15** is a left side view thereof;
FIG. **16** is a right side view thereof;
FIG. **17** is a front elevational view thereof;
FIG. **18** is a rear elevational view thereof;
FIG. **19** is a side elevational view thereof; and,
FIG. **20** is a side elevational view thereof.
The broken lines depict portions of the audio headphones that form no part of the claimed design.

1 Claim, 15 Drawing Sheets

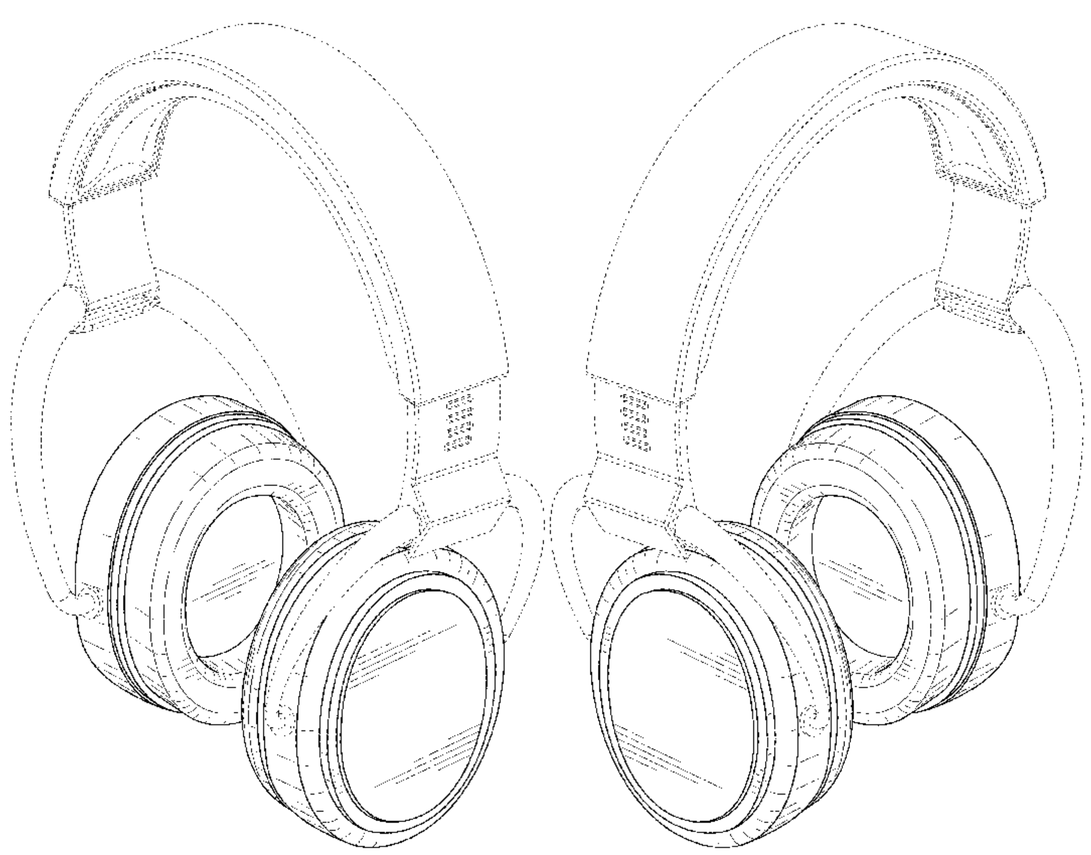

(56) **References Cited**

U.S. PATENT DOCUMENTS

4,133,053 A * 1/1979 Lundin H04R 1/1058 2/209
4,385,209 A 5/1983 Greason
4,523,661 A * 6/1985 Scalzo A42B 3/166 181/129
D300,528 S 4/1989 Drane
4,856,118 A * 8/1989 Sapiejewski A61F 11/14 2/209
4,905,322 A * 3/1990 Aileo A42B 3/166 181/129
5,018,599 A 5/1991 Dohi
5,020,163 A * 6/1991 Aileo A42B 3/166 181/129
5,068,923 A * 12/1991 Sjoqvist A61F 11/14 2/209
5,144,678 A * 9/1992 Lenz H04R 1/1041 381/371
5,500,958 A * 3/1996 Falco A61F 11/14 2/209
D374,658 S * 10/1996 Bever D13/171
D375,584 S * 11/1996 Westerdal D29/112
5,666,702 A 9/1997 Ming-Chieh
D385,665 S * 10/1997 Westerdal D29/112
5,812,680 A 9/1998 Glendon
D407,985 S 4/1999 Pimentel
5,996,123 A * 12/1999 Leight A61F 11/14 2/209
D463,784 S * 10/2002 Taylor D14/206
D464,469 S 10/2002 Dix
D465,616 S * 11/2002 Nilsson A61F 11/14 D29/112
6,856,690 B1 * 2/2005 Skulley H04R 1/1008 381/367
D505,411 S * 5/2005 Sakai D14/192
D512,417 S 12/2005 Hirakawa
D541,485 S * 4/2007 Birgersson D29/112
D544,650 S * 6/2007 Westerdal D29/112
D549,217 S 8/2007 Viduya
7,356,362 B2 4/2008 Chang et al.
7,388,960 B2 6/2008 Kuo
D573,581 S * 7/2008 Gondo D14/205
D581,394 S 11/2008 Lee
D588,098 S 3/2009 Kurihara
D603,370 S 11/2009 Suzuki
D605,629 S 12/2009 Suwalski
D616,419 S 5/2010 Suwalski
7,853,034 B1 12/2010 Gresko
D634,732 S 3/2011 Kondo
D639,775 S 6/2011 Horibe
D639,776 S * 6/2011 Arimoto D14/205
D642,554 S 8/2011 Schaal
D648,706 S 11/2011 Gresko et al.
D649,956 S 12/2011 Gresko et al.
D651,764 S 1/2012 Gresko et al.
D657,776 S 4/2012 Lee
8,358,799 B1 * 1/2013 Gresko H04R 1/1091 381/371
8,767,996 B1 7/2014 Lin
D713,384 S * 9/2014 McNamara D14/223
D734,297 S 7/2015 Sasaki
D735,419 S * 7/2015 Rose D29/112
D737,799 S * 9/2015 Carr D14/205
D739,842 S 9/2015 Birger
D741,550 S 10/2015 Edwardsson
9,167,340 B2 10/2015 Rois et al.
D768,110 S 10/2016 Suzuki
9,490,593 B2 11/2016 Rois
D776,081 S * 1/2017 Willman D14/205
D793,646 S 8/2017 Bacallao
D794,603 S * 8/2017 Riggs D14/205
D795,218 S 8/2017 Ohmachi
D814,457 S * 4/2018 Willis D14/344
D815,065 S * 4/2018 Willis D14/223
D821,353 S 6/2018 Ohmachi
10,187,716 B1 1/2019 England
D846,526 S * 4/2019 Spencer D14/205
D859,353 S 9/2019 Wagner
D859,354 S * 9/2019 Xia D14/205
D881,475 S * 4/2020 Xu D29/112
D902,496 S 11/2020 Bui
D909,991 S * 2/2021 Nakayama D14/205
D925,489 S * 7/2021 Brunner D14/205
D933,041 S * 10/2021 Rois D14/205
2005/0220318 A1 * 10/2005 Han H04R 1/1008 381/371
2007/0041604 A1 2/2007 Yang
2012/0140973 A1 6/2012 Olodort
2014/0112519 A1 4/2014 Chen
2014/0205129 A1 7/2014 Blair
2017/0230746 A1 8/2017 Silvestri
2019/0373353 A1 12/2019 Yuen
2020/0030151 A1 1/2020 Hemberg

* cited by examiner

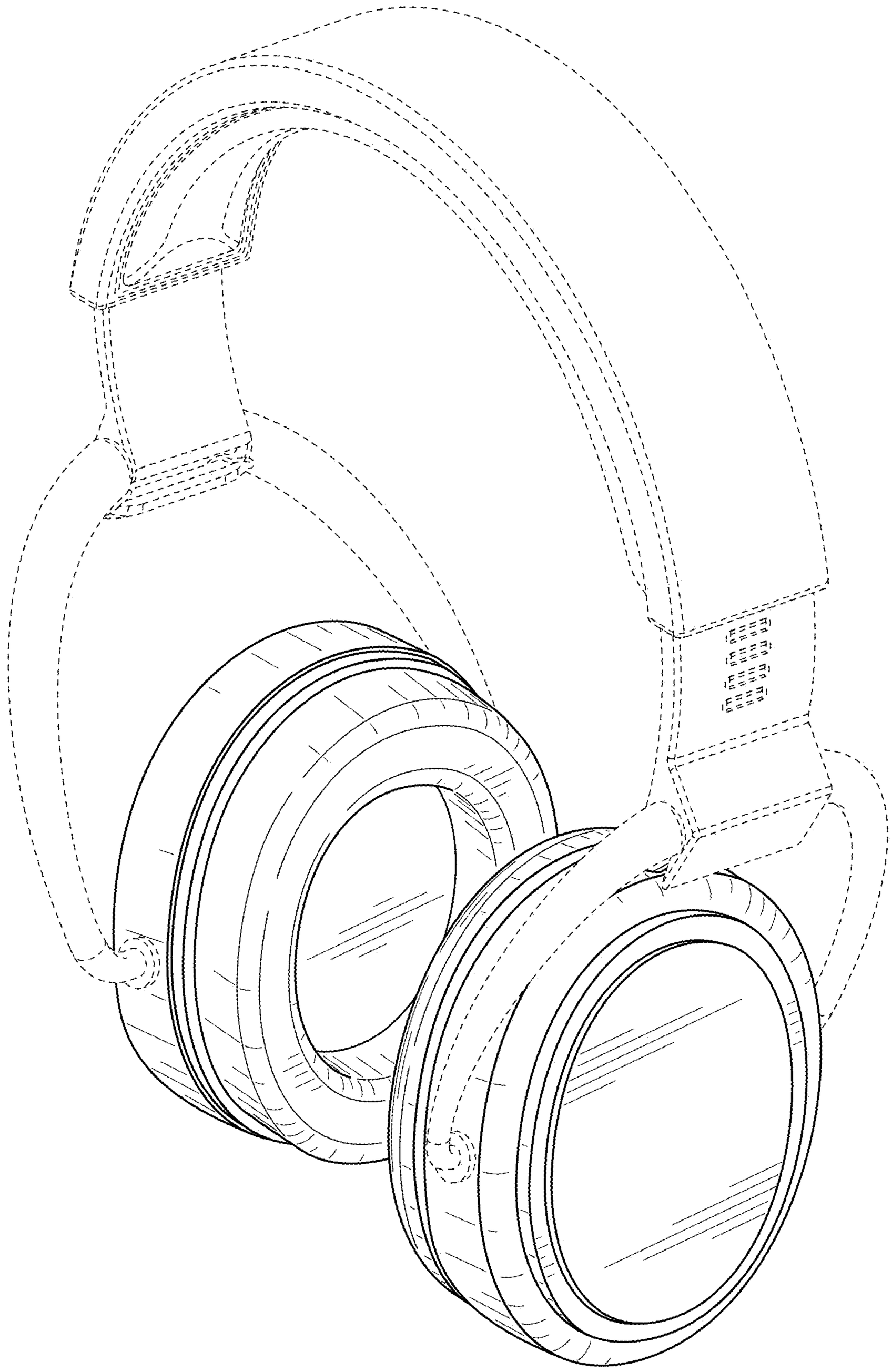

FIG. 1

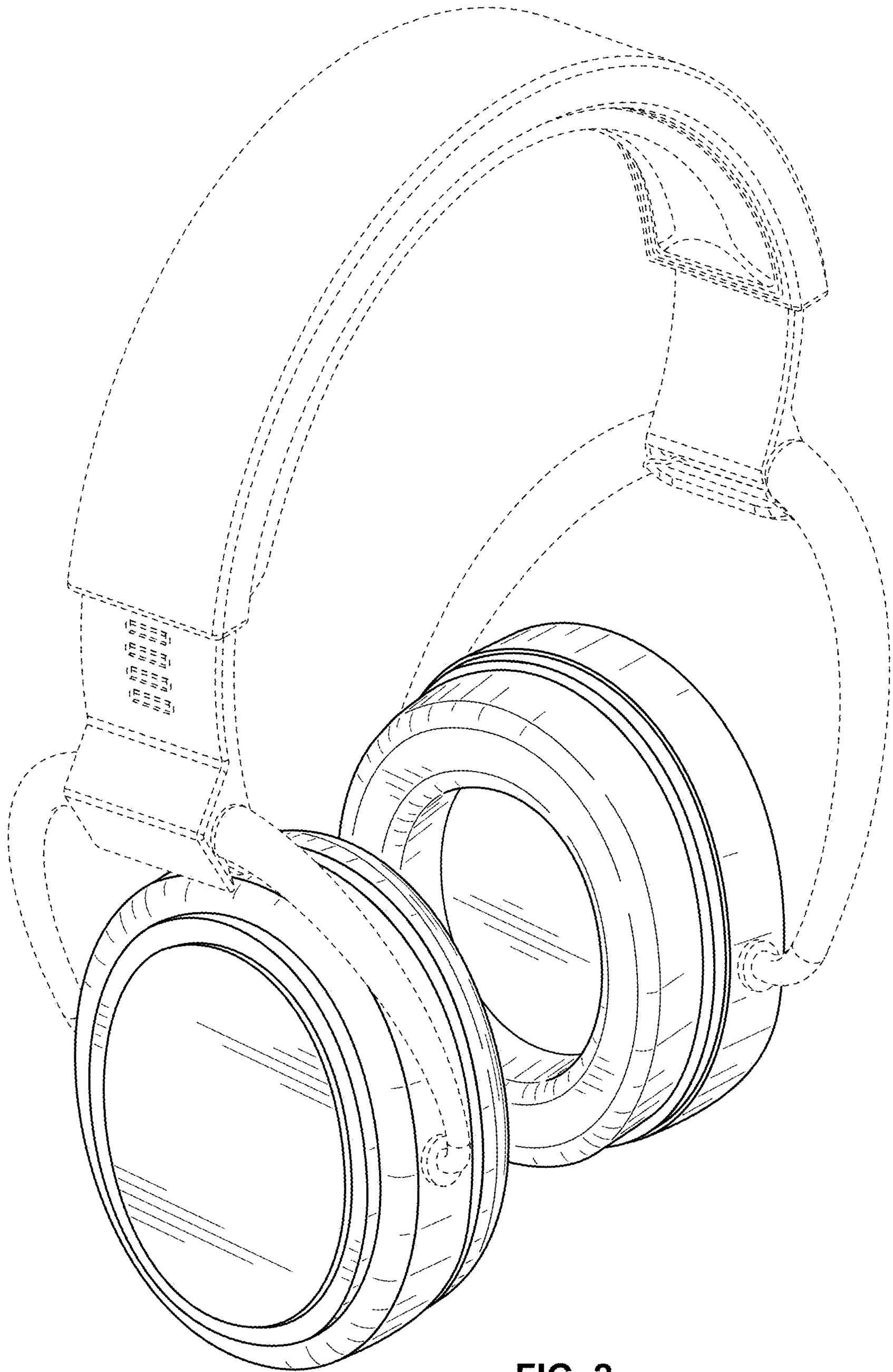

FIG. 2

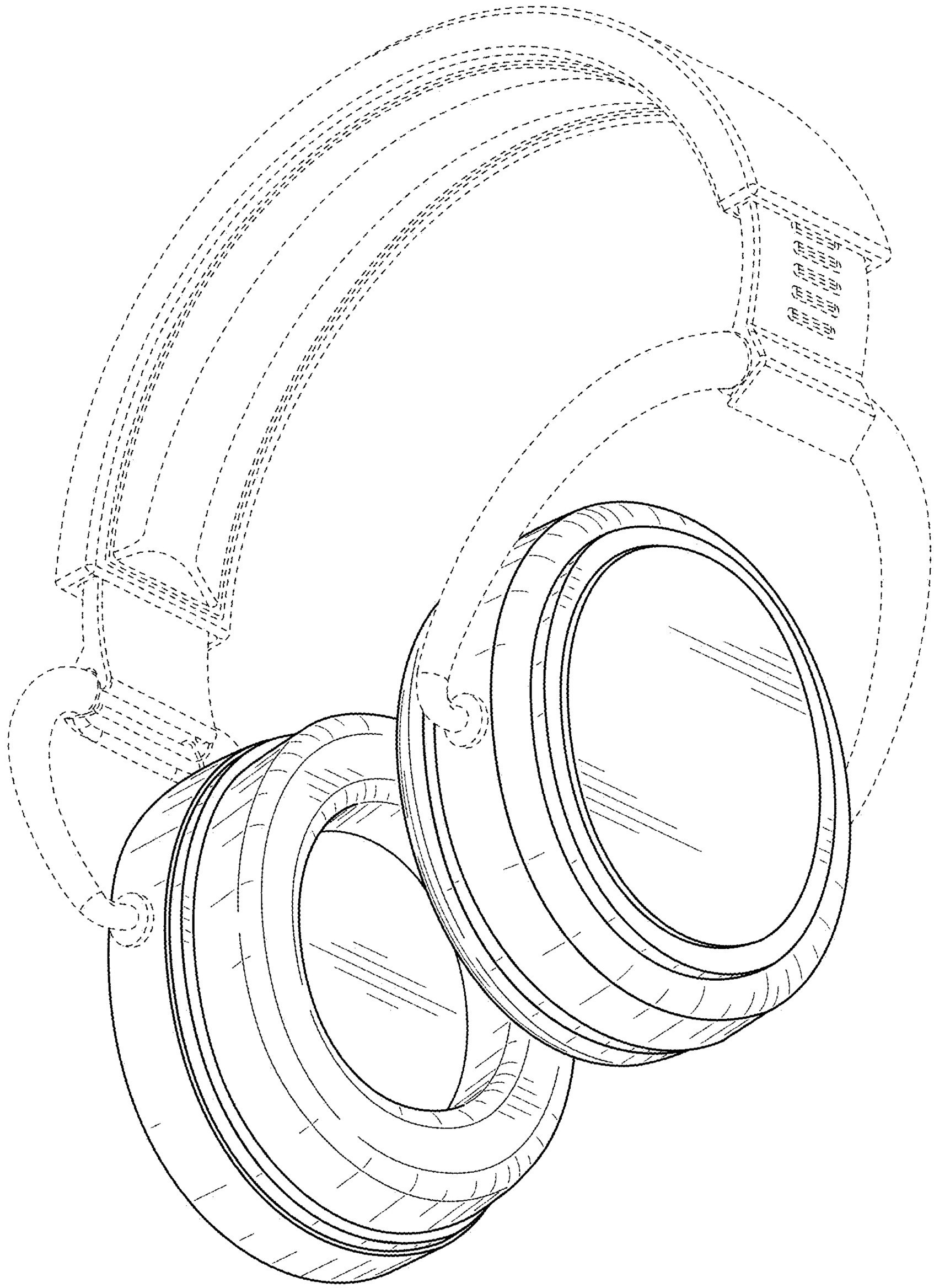

FIG. 3

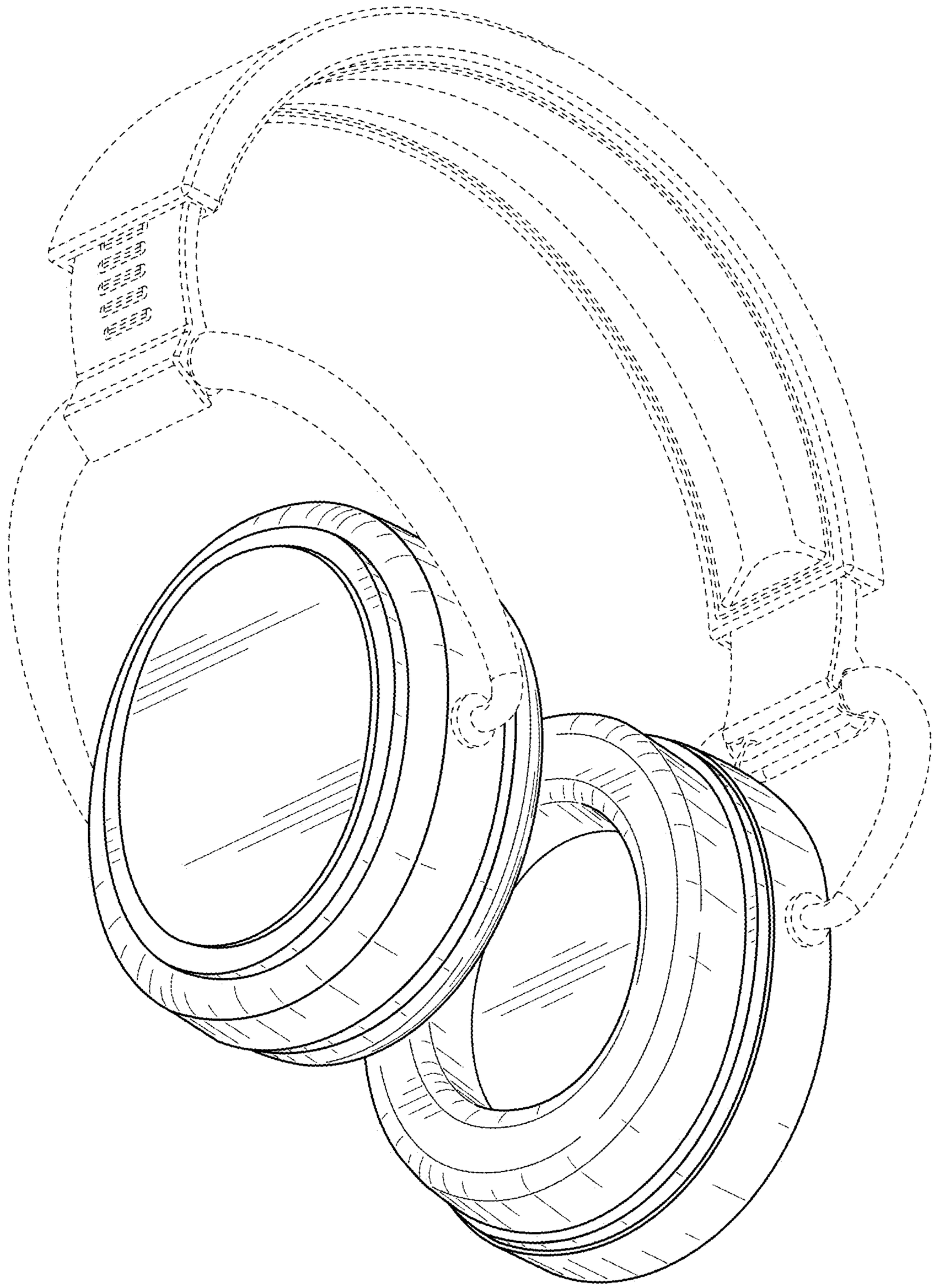

FIG. 4

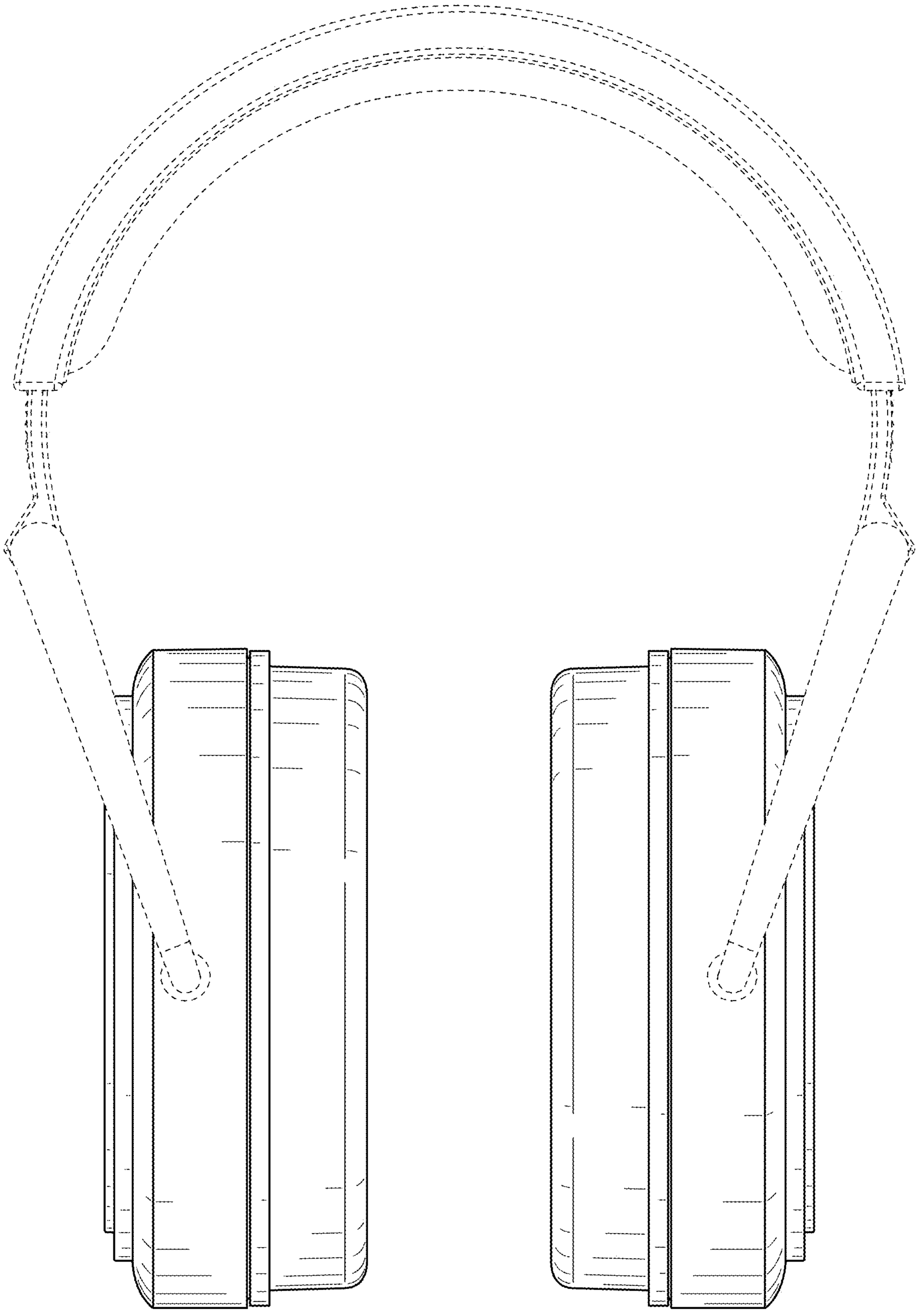

FIG. 5

FIG. 6

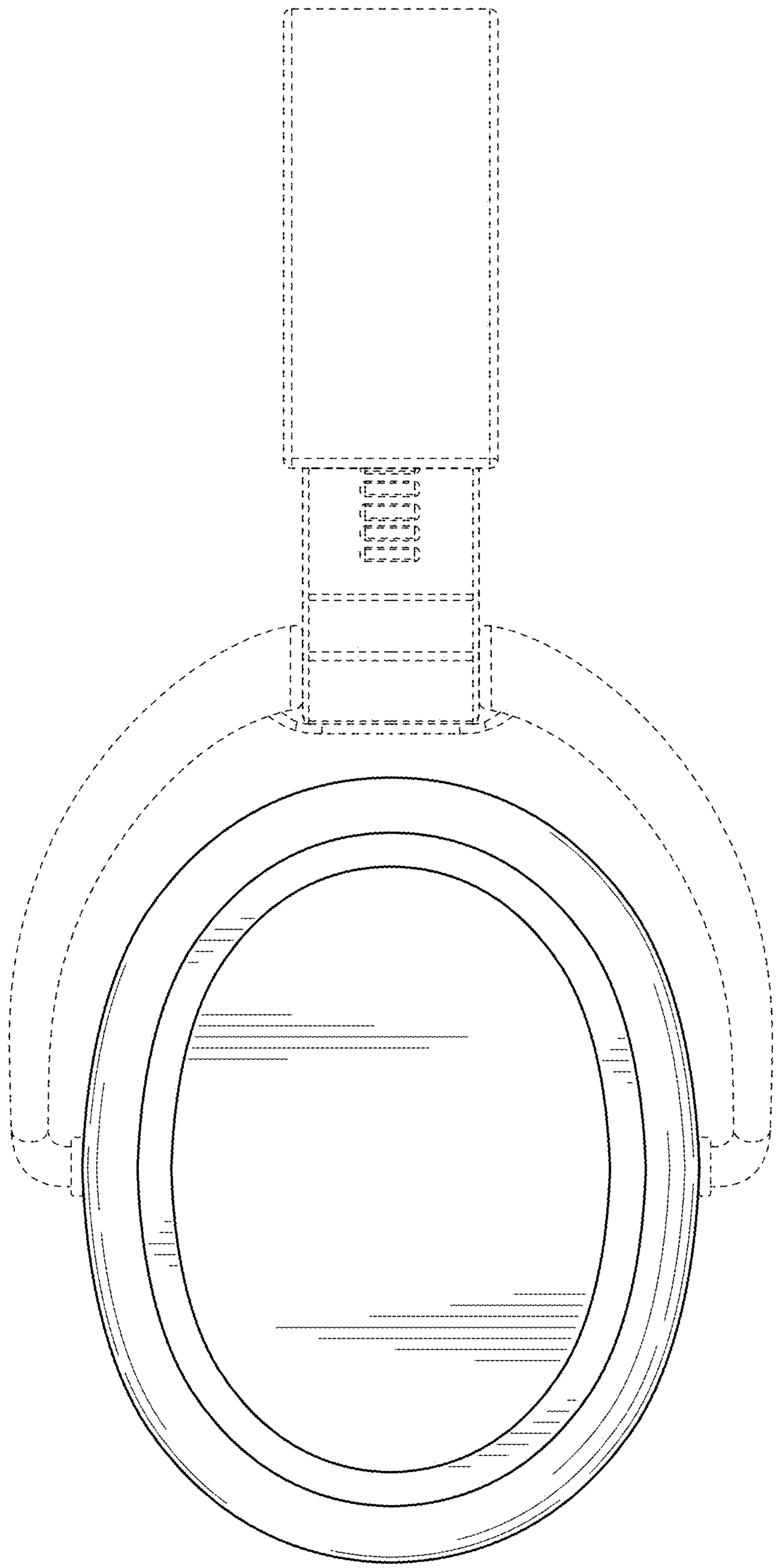

FIG. 7

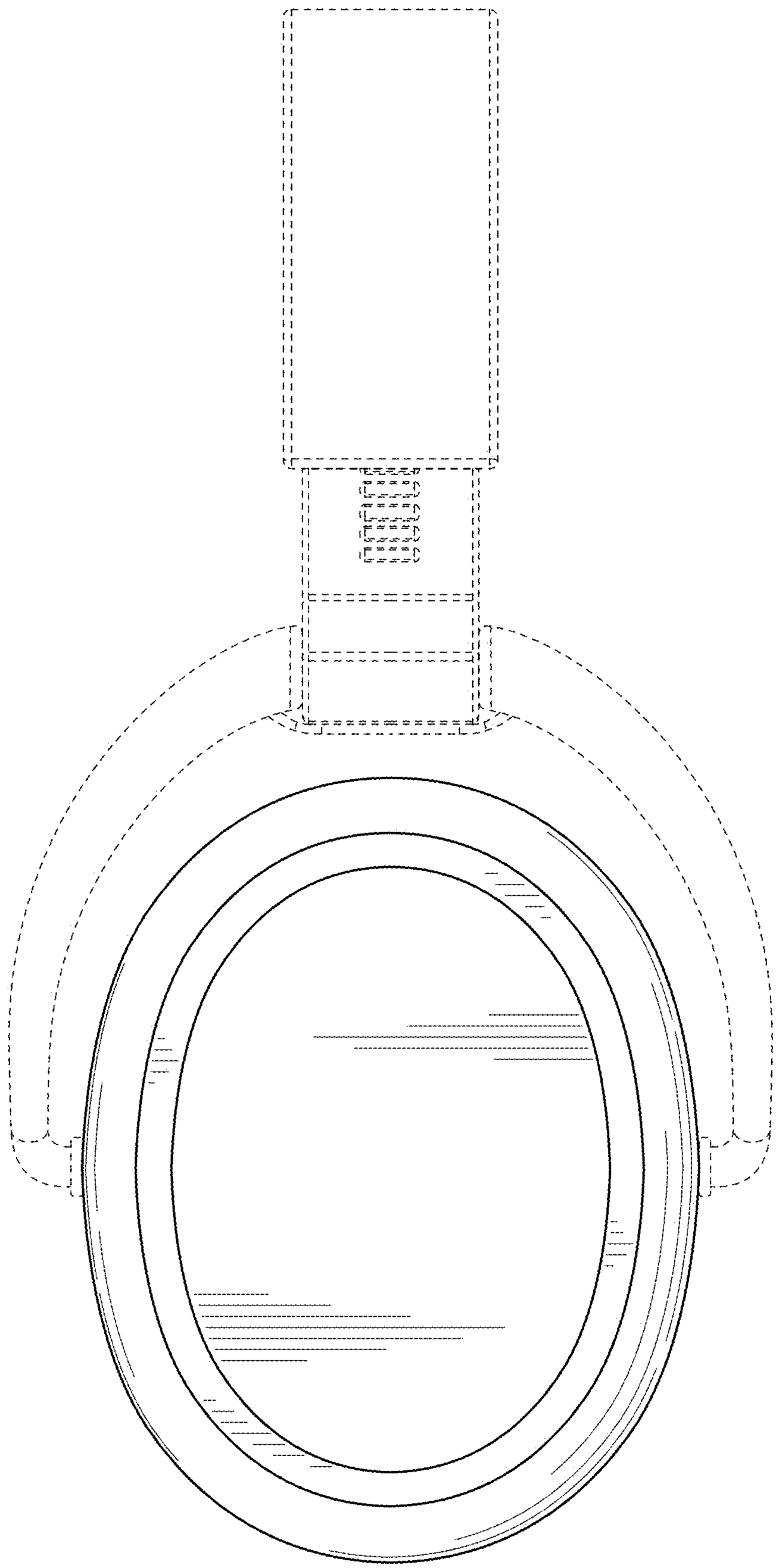

FIG. 8

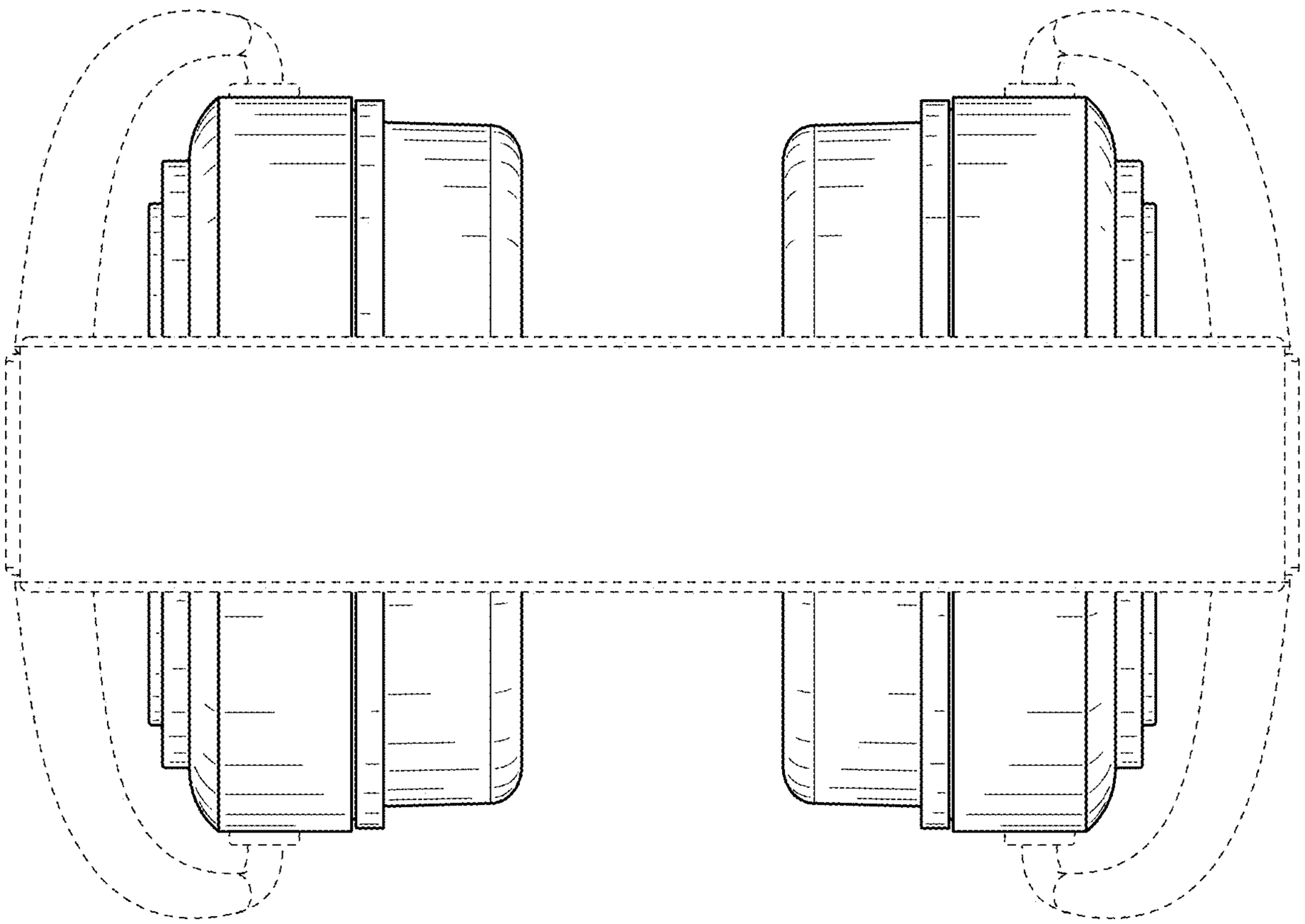

FIG. 9

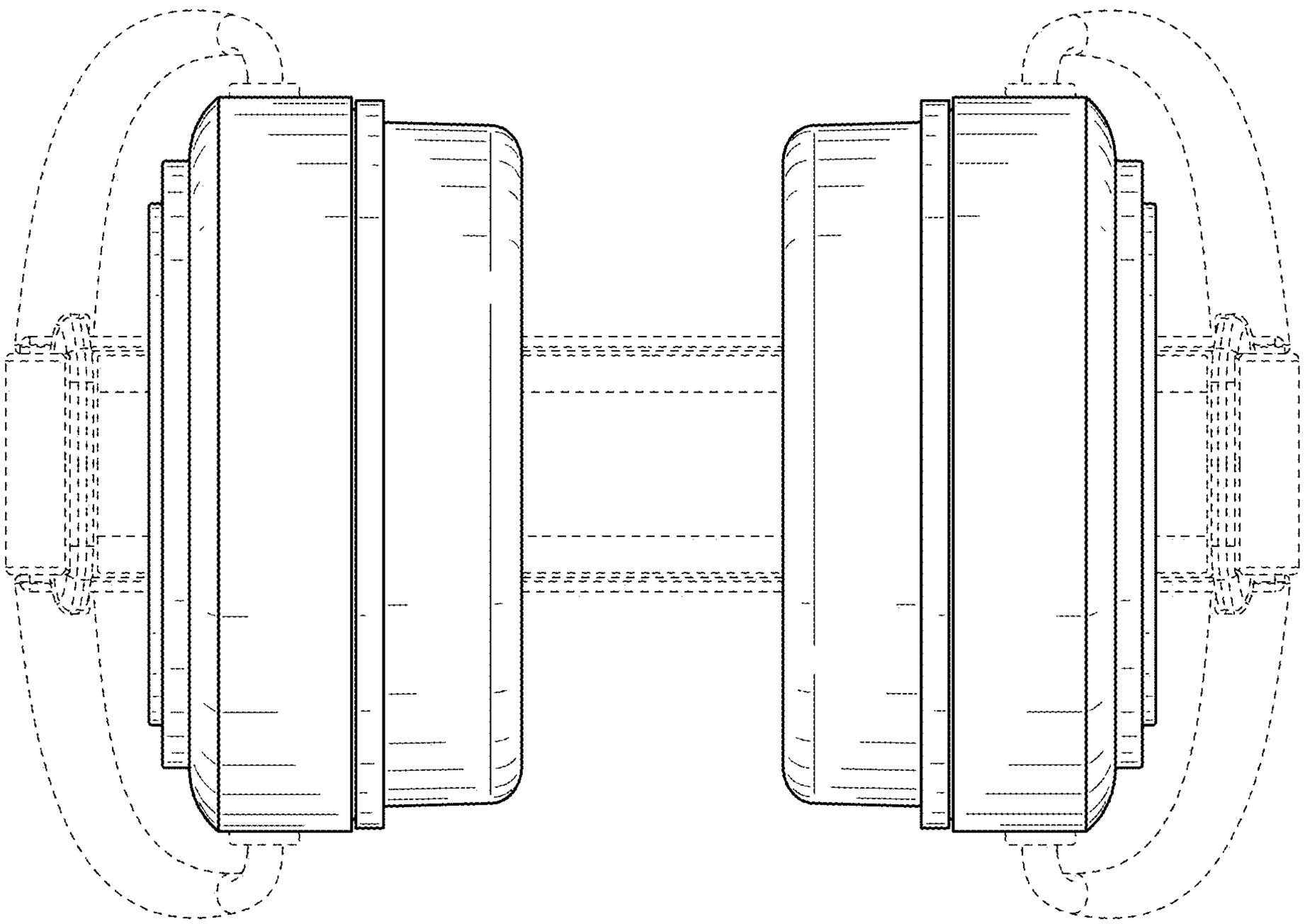

FIG. 10

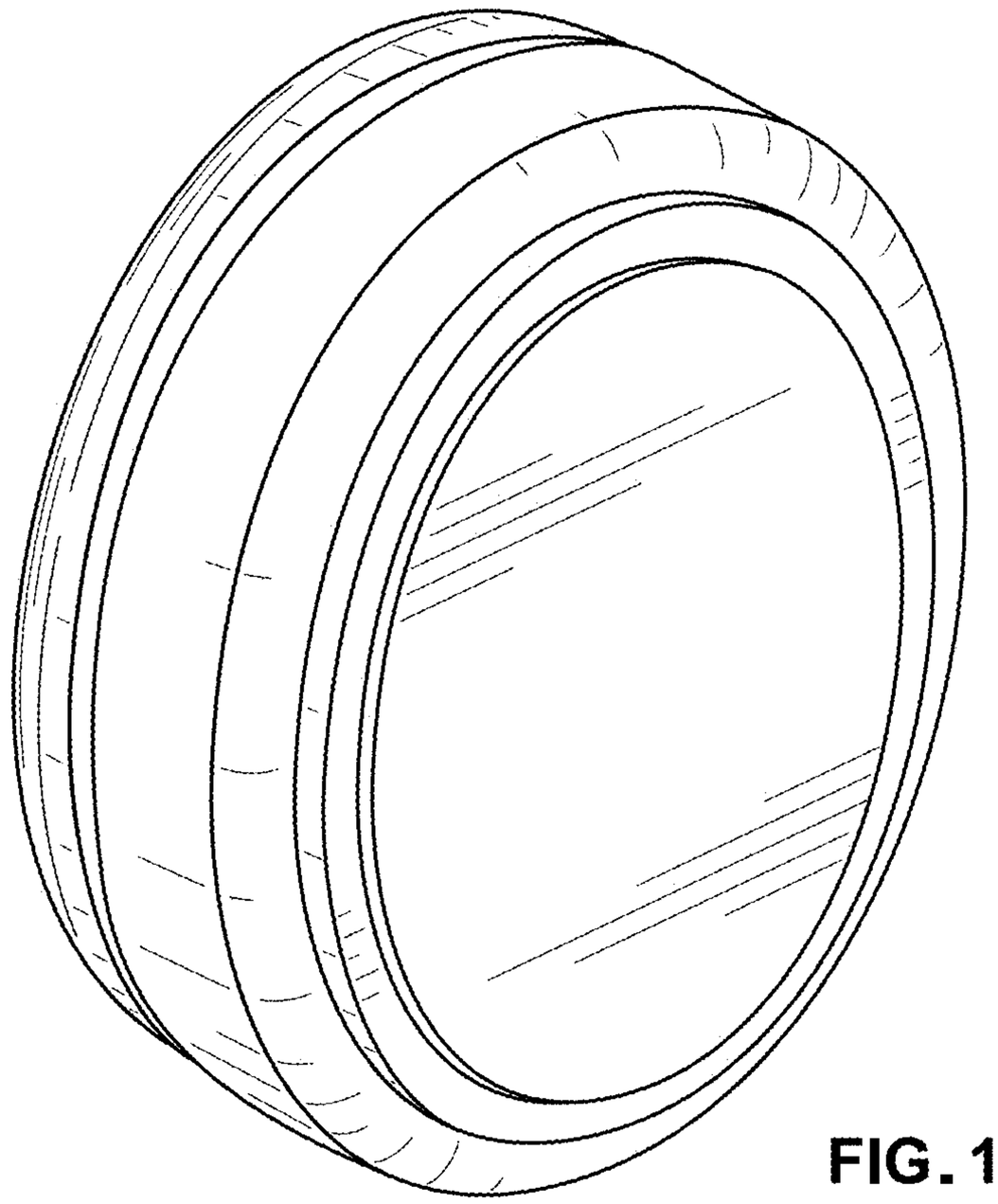

FIG. 11

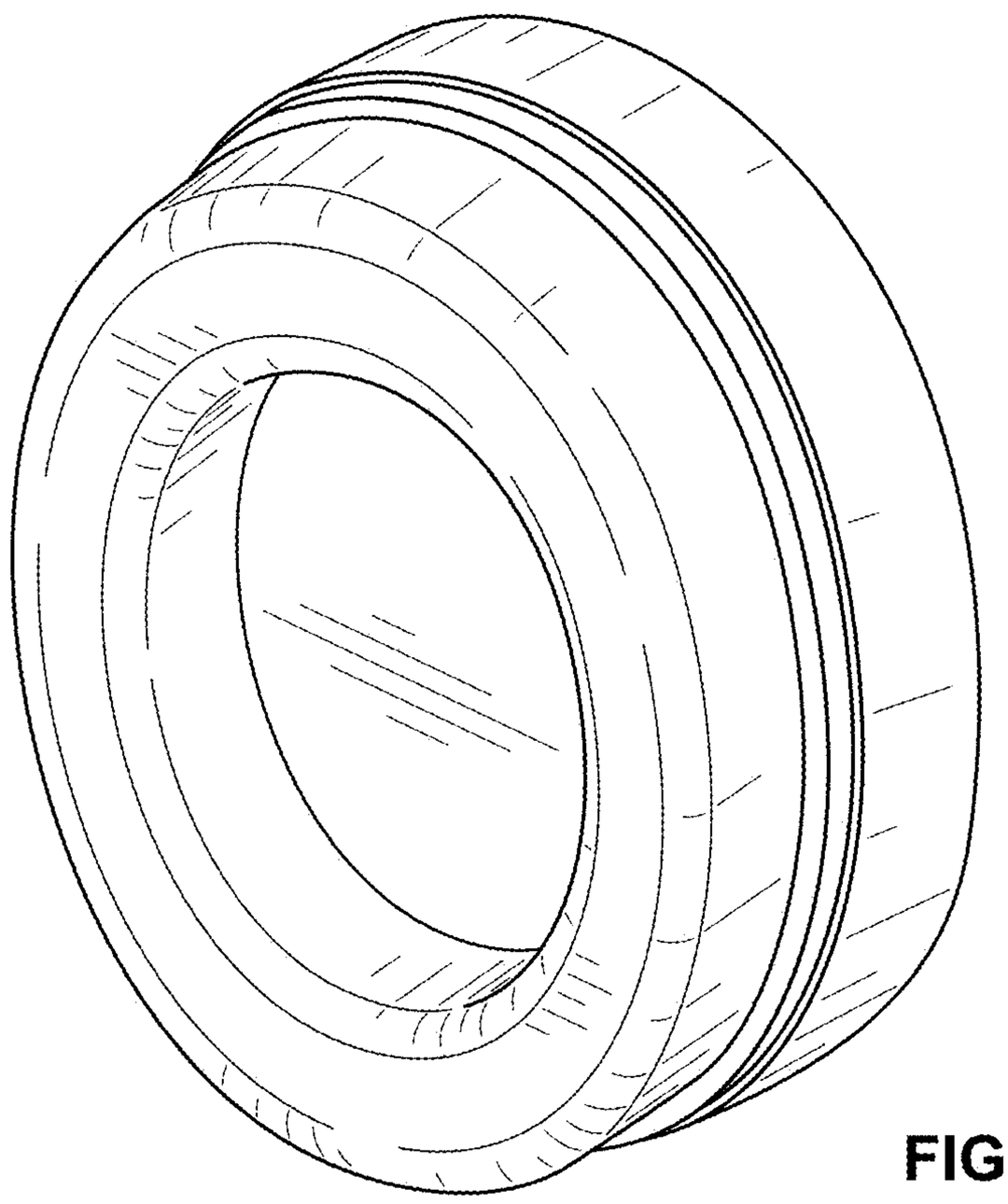

FIG. 12

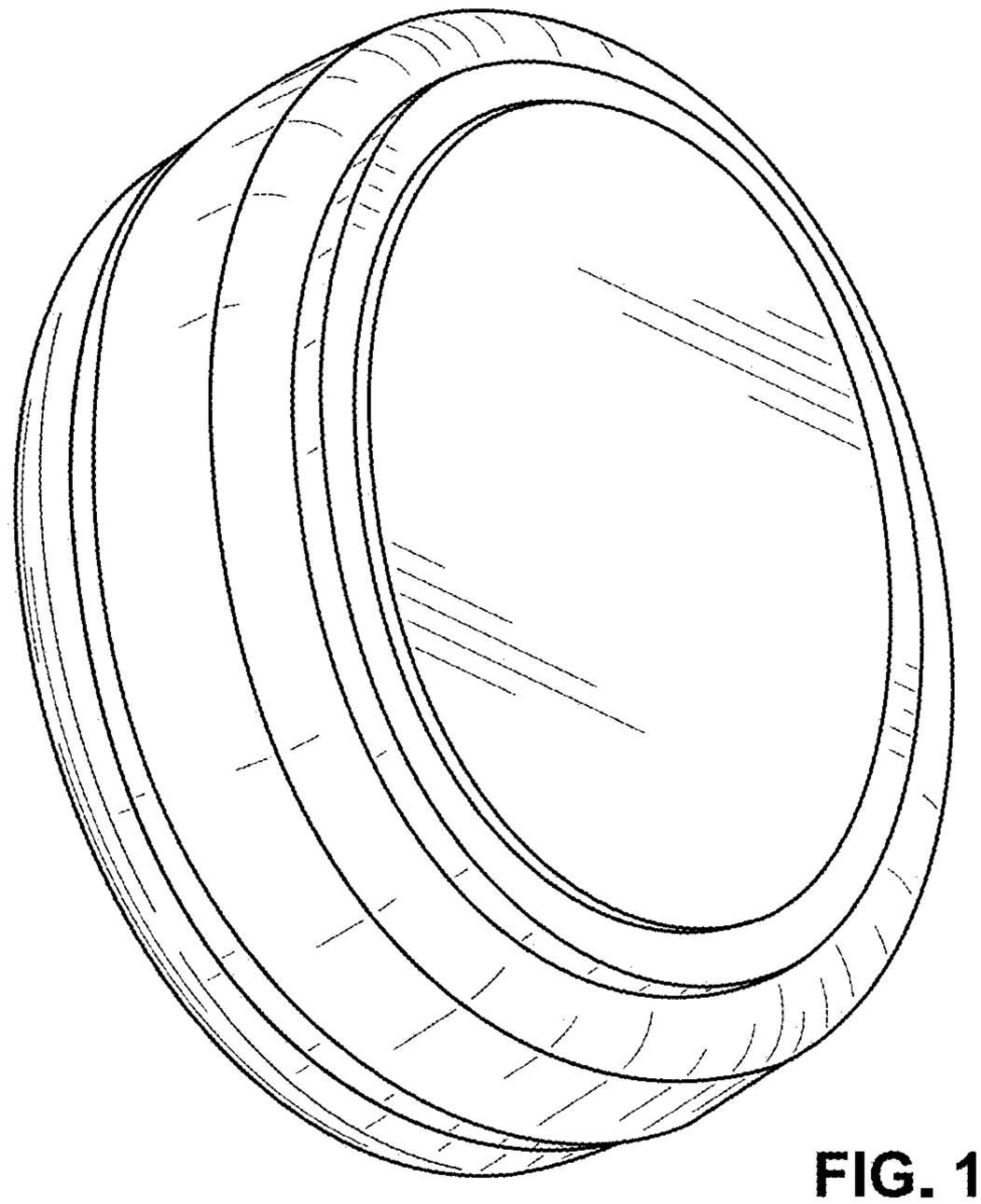

FIG. 13

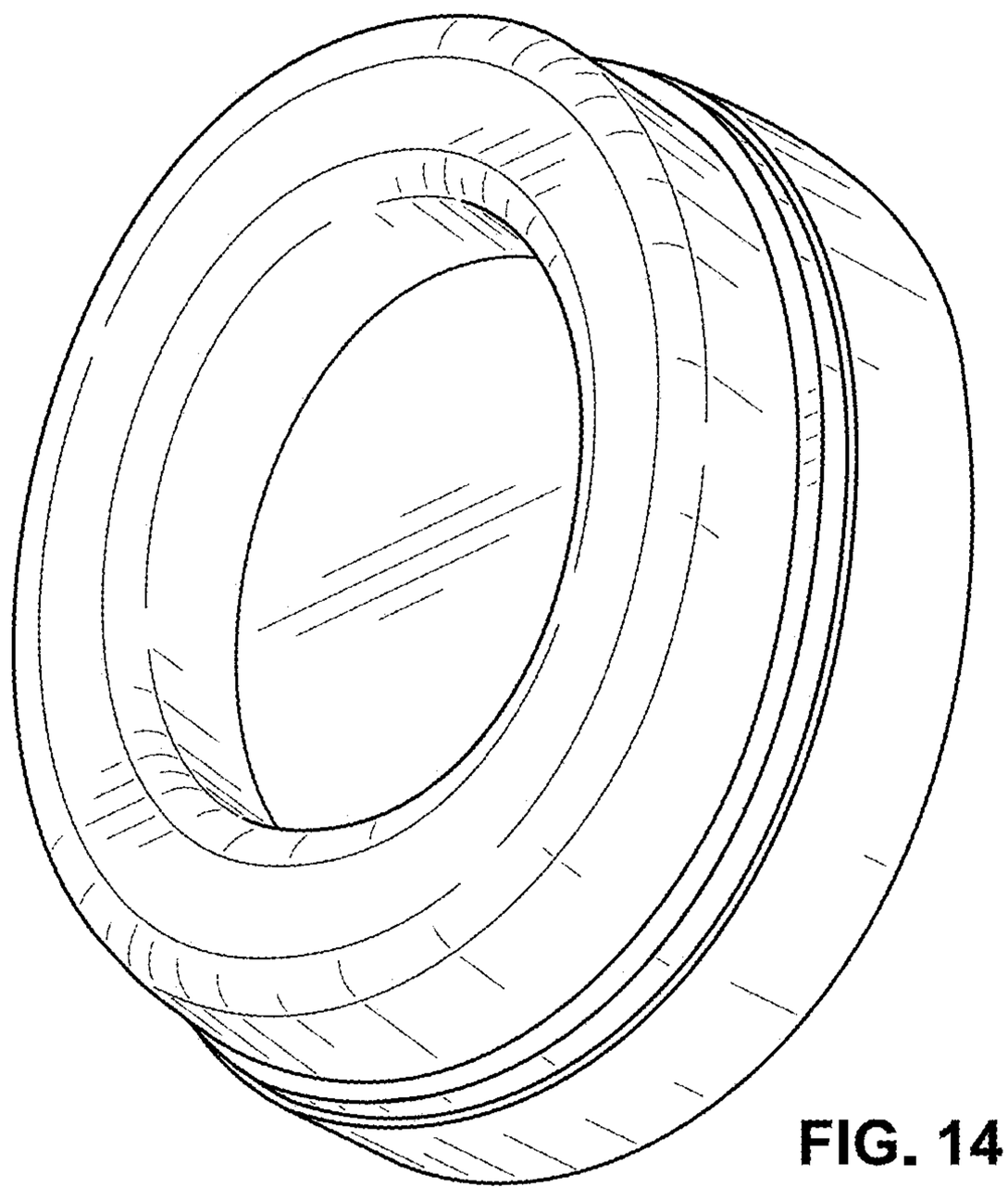

FIG. 14

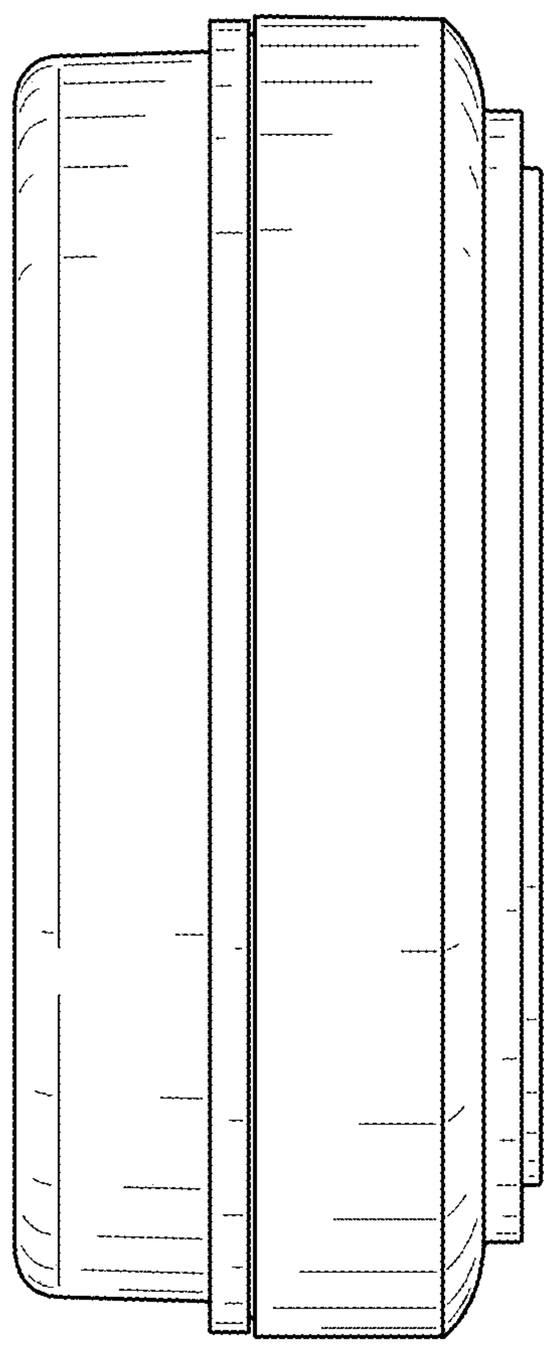

FIG. 15

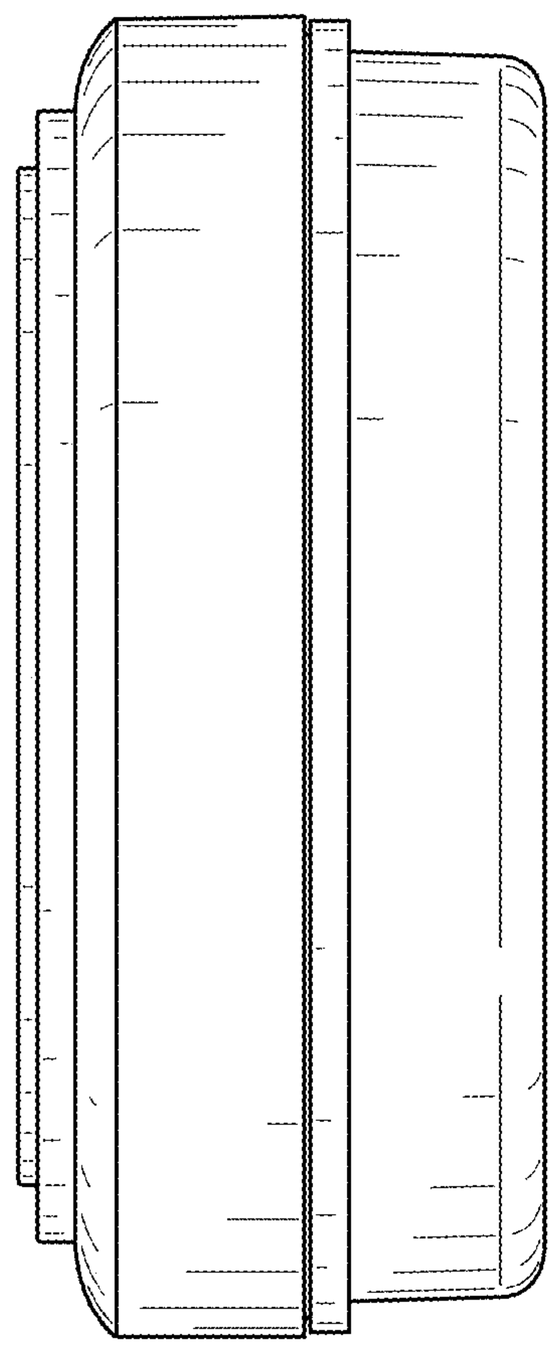

FIG. 16

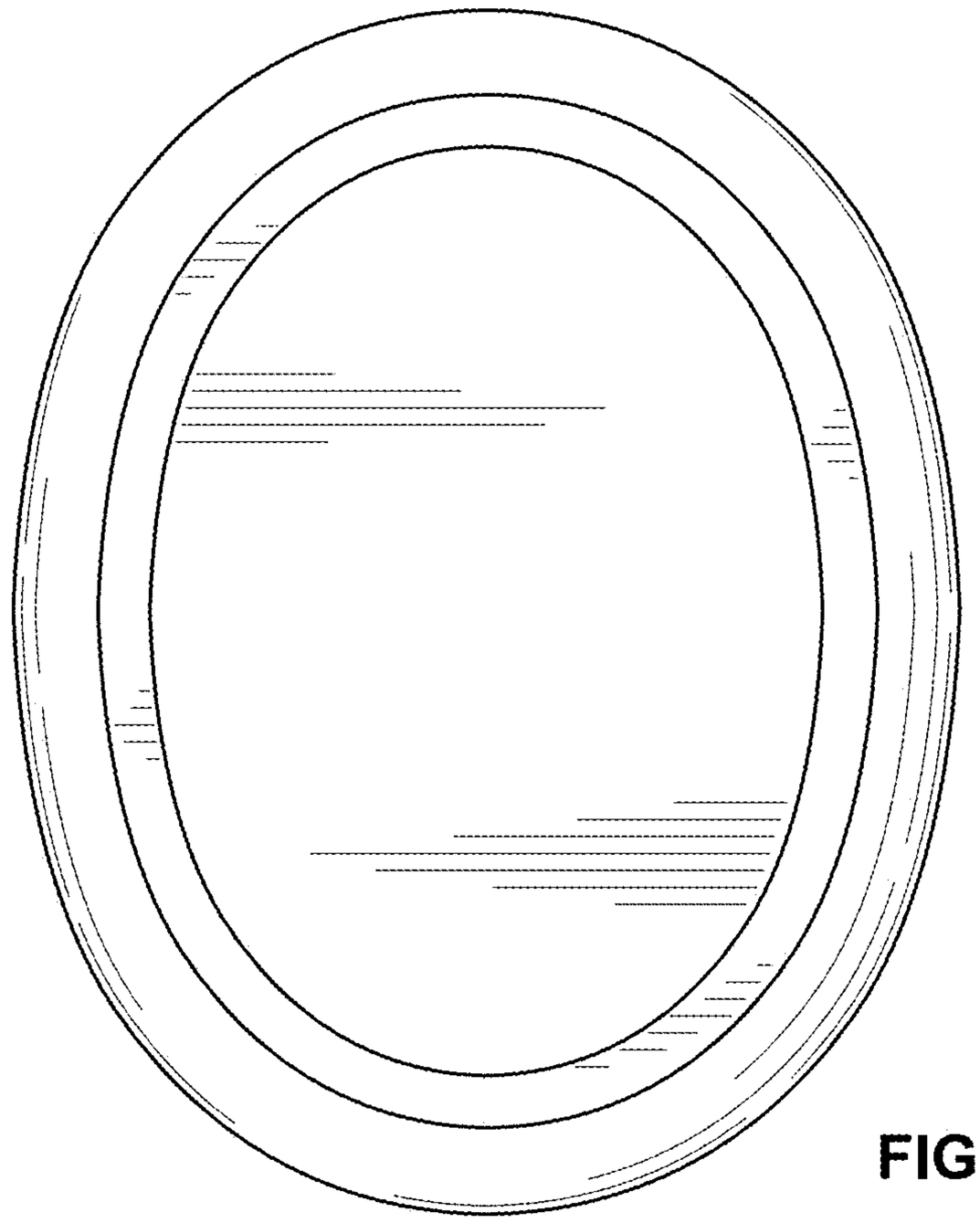

FIG. 17

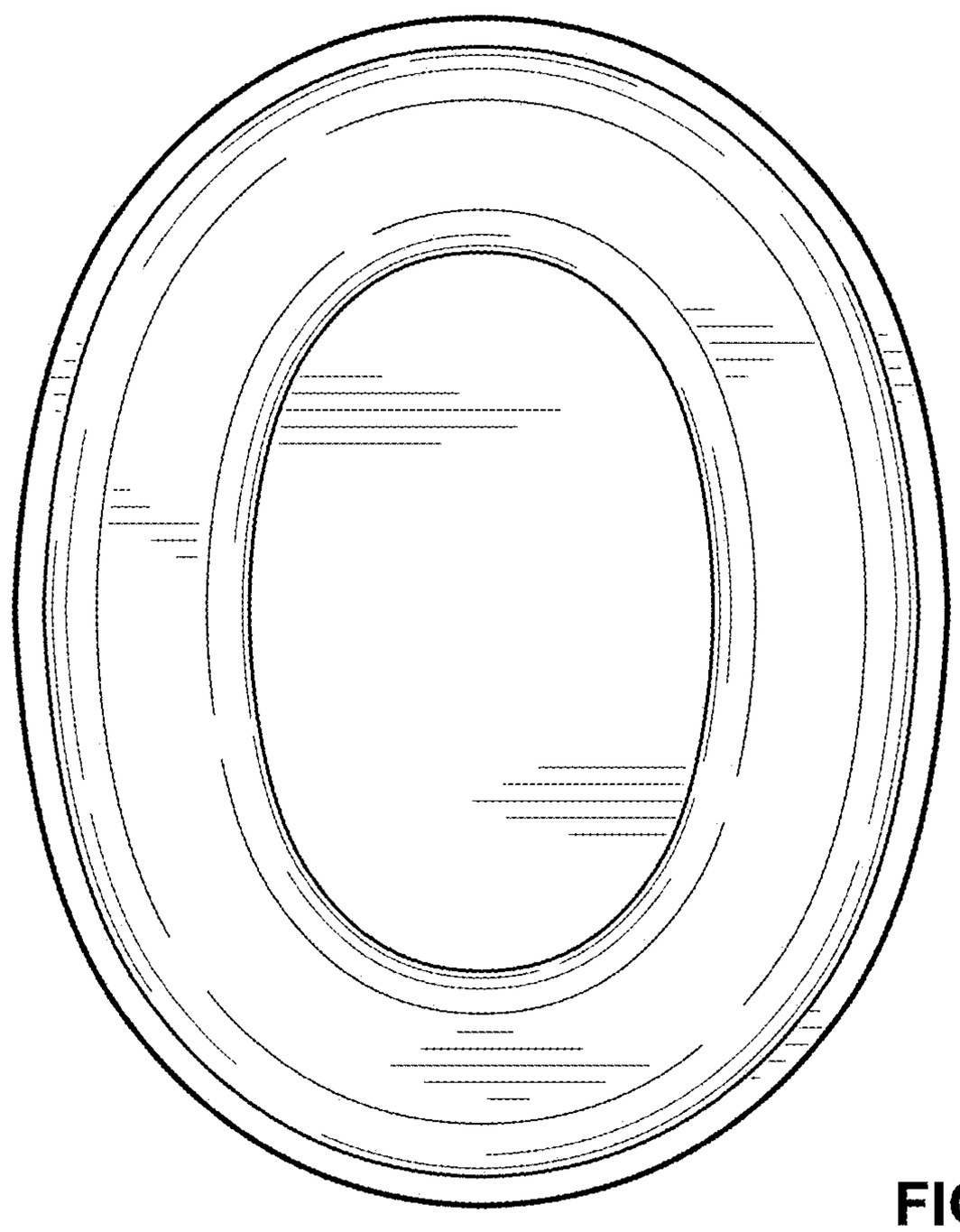

FIG. 18

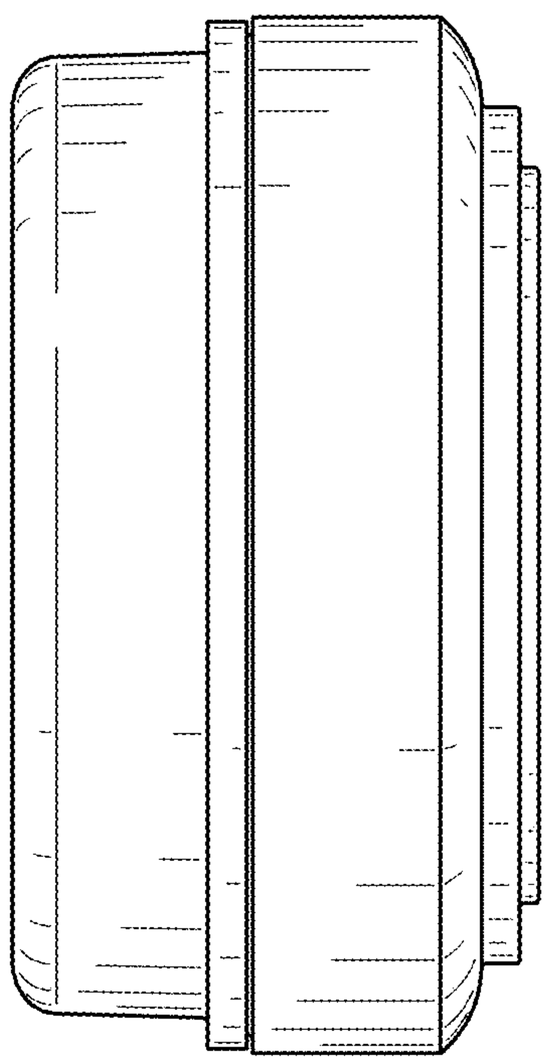

FIG. 19

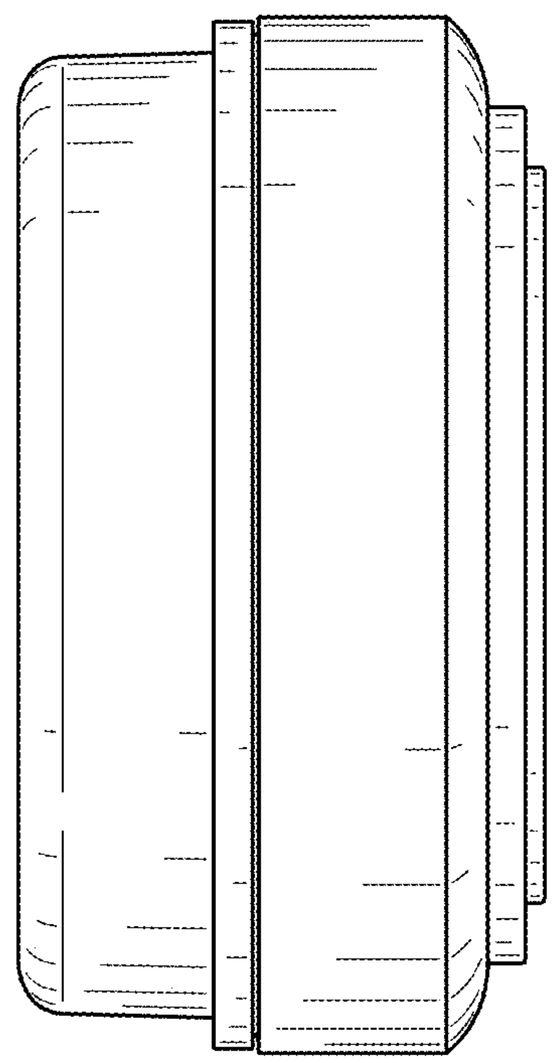

FIG. 20