US00D945542S

(12) United States Design Patent

Andrews

(10) Patent No.: US D945,542 S
(45) Date of Patent: ** Mar. 8, 2022

(54) **GOLF CLUB HEAD**

(71) Applicant: **PARSONS XTREME GOLF, LLC**, Scottsdale, AZ (US)

(72) Inventor: **Matthew T. Andrews**, Tempe, AZ (US)

(73) Assignee: **PARSONS XTREME GOLF, LLC**, Scottsdale, AZ (US)

(**) Term: **15 Years**

(21) Appl. No.: **29/739,598**

(22) Filed: **Jun. 26, 2020**

(51) **LOC (13) Cl.** **21-02**

(52) **U.S. Cl.**
USPC **D21/736**

(58) **Field of Classification Search**
USPC D21/736–746, 759
CPC A63B 53/00; A63B 53/04; A63B 53/007; A63B 53/065; A63B 53/048; A63B 60/00; A63B 60/04
See application file for complete search history.

(56) **References Cited**

U.S. PATENT DOCUMENTS

723,534	A	3/1903	Knight
922,444	A	5/1909	Youds
1,094,599	A	4/1914	Samson
D57,980	S	5/1921	Kraeuter
D63,284	S	11/1923	Challis
RE19,178	E	5/1934	Spiker
4,043,562	A	8/1977	Shillington
D248,783	S	8/1978	Long
4,340,230	A	7/1982	Churchward
D281,092	S	10/1985	Mills
4,754,977	A	7/1988	Sahm
4,869,507	A	9/1989	Sahm
4,964,641	A	10/1990	Miesch et al.
D313,451	S	1/1991	Shearer
D335,317	S	5/1993	Shearer
D335,692	S	5/1993	Antonious
D336,757	S	6/1993	Antonious
5,275,412	A	1/1994	Innes
D350,582	S	9/1994	Miansian et al.
5,390,919	A	2/1995	Stubbs et al.
D356,131	S	3/1995	Trimble
D360,444	S	7/1995	Takahashi et al.
5,429,366	A	7/1995	McCabe
D363,101	S	10/1995	Sturm
D364,665	S	11/1995	Goodrich
D365,864	S	1/1996	Sturm
5,489,097	A	2/1996	Simmons
D368,751	S	4/1996	Rife
D369,393	S	4/1996	Takahashi et al.
5,571,053	A	11/1996	Lane
D378,688	S	4/1997	Cameron
D380,514	S	7/1997	Markley
D385,609	S	10/1997	Cameron
5,683,307	A	11/1997	Rife
D388,143	S	12/1997	Huan-Chiang
D389,207	S	1/1998	Cameron
D398,685	S	9/1998	Masuda
5,807,190	A	9/1998	Krumme et al.
D399,290	S	10/1998	Sizemore, Jr.
D399,911	S	10/1998	Nicolette et al.
5,839,974	A	11/1998	McAllister
D405,836	S	2/1999	Nicolette et al.
D409,701	S	5/1999	Ashcraft et al.
D411,275	S	6/1999	Bottema et al.
5,924,938	A	7/1999	Hines
D415,809	S	10/1999	Bottema et al.
D416,062	S	11/1999	Solheim et al.
D416,969	S	11/1999	Solheim et al.
D416,970	S	11/1999	Solheim et al.
6,007,434	A	12/1999	Baker et al.
D421,473	S	3/2000	Solheim et al.
D422,655	S	4/2000	Hicks
6,050,903	A	4/2000	Lake
D426,276	S	6/2000	Besnard et al.
6,089,993	A	7/2000	Woodward et al.
D429,302	S	8/2000	Antonious
6,110,057	A	8/2000	McKinnon
D430,914	S	9/2000	Antonious
D431,853	S	10/2000	Antonious
D431,854	S	10/2000	Cameron
D432,192	S	10/2000	Hicks
D436,151	S	1/2001	Nicolette et al.
D437,374	S	2/2001	Cameron
D441,820	S	5/2001	Nicolette et al.
D443,668	S	6/2001	Nicolette et al.
D443,905	S	6/2001	Nicolette et al.
D444,833	S	7/2001	Wells et al.
D444,835	S	7/2001	Wahl et al.
6,257,994	B1	7/2001	Antonious
6,264,571	B1	7/2001	Lekavich
D449,664	S	10/2001	Beebe et al.
D449,865	S	10/2001	Fife, Jr. et al.

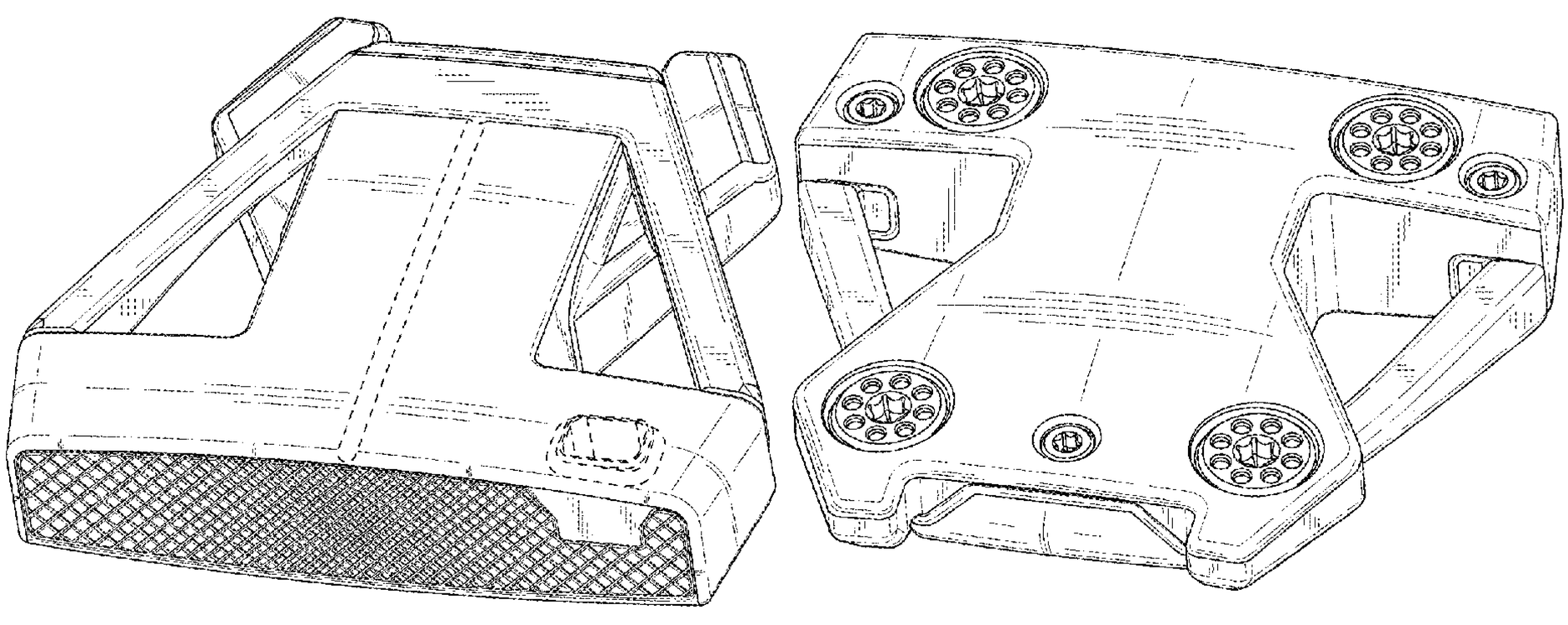

D450,799 S 11/2001 Nicolette et al.
D451,973 S 12/2001 Wells et al.
6,348,014 B1 2/2002 Chiu
6,354,959 B1 3/2002 Nicolette et al.
6,394,910 B1 5/2002 McCarthy
D472,949 S 4/2003 Serrano
D474,821 S 5/2003 Wells et al.
D474,949 S 5/2003 Schaffeld et al.
D482,087 S 11/2003 Burrows
6,652,390 B2 11/2003 Bradford
D483,086 S 12/2003 Schweigert et al.
D486,539 S 2/2004 Burrows
D486,872 S 2/2004 Schweigert et al.
D488,200 S 4/2004 Olsavsky et al.
D490,487 S 5/2004 Burrows
D498,276 S 11/2004 Schweigert et al.
D500,823 S 1/2005 Aldrich
6,902,496 B2 6/2005 Solheim et al.
D511,801 S 11/2005 Garcia
D512,114 S 11/2005 Garcia
D512,116 S 11/2005 Miraflor et al.
6,988,955 B2 1/2006 Stoakes
6,988,956 B2 1/2006 Cover et al.
D520,088 S 5/2006 Parr
D531,242 S 10/2006 Adams
7,125,341 B1 10/2006 D'Eath
D532,067 S 11/2006 Soracco et al.
7,153,220 B2 12/2006 Lo
D534,595 S 1/2007 Hasebe
7,156,752 B1 1/2007 Bennett
D536,401 S 2/2007 Kawami
D536,403 S 2/2007 Kawami
D537,898 S 3/2007 Kuan et al.
D538,371 S 3/2007 Kawami
7,204,765 B2 4/2007 Cover et al.
D542,869 S 5/2007 Adams
D543,598 S 5/2007 Kuan et al.
D543,601 S 5/2007 Kawami
D555,219 S 11/2007 Lin
D556,277 S 11/2007 Broom
7,309,297 B1 12/2007 Solari
D561,854 S 2/2008 Morris
7,331,876 B2 2/2008 Klein
7,351,162 B2 4/2008 Soracco et al.
D569,461 S 5/2008 Morris
D569,930 S 5/2008 Nehrbas
7,396,289 B2 7/2008 Soracco et al.
D577,085 S 9/2008 Nicolette et al.
D577,086 S 9/2008 Nicolette et al.
D579,506 S 10/2008 Nicolette et al.
D579,995 S 11/2008 Nicolette et al.
D582,497 S 12/2008 Rollinson
7,473,189 B2 1/2009 Schweigert et al.
7,491,131 B2 2/2009 Vinton
D594,921 S 6/2009 Bettinardi
D595,370 S * 6/2009 Ines D21/736
D595,793 S 7/2009 Rollinson
D599,425 S 9/2009 Laub
D599,867 S 9/2009 Teramoto
D600,295 S * 9/2009 Meeks D21/744
D600,763 S 9/2009 Cameron
D601,214 S 9/2009 Serrano et al.
D606,139 S * 12/2009 Ines D21/736
D607,951 S 1/2010 Teramoto
7,744,485 B2 6/2010 Jones et al.
D620,993 S 8/2010 Laub
D621,461 S 8/2010 Serrano et al.
D623,709 S 9/2010 Serrano et al.
D631,925 S 2/2011 Broom
7,887,432 B2 2/2011 Jones et al.
D633,964 S 3/2011 Teramoto
7,909,707 B2 3/2011 Klein
7,918,745 B2 4/2011 Morris et al.
7,927,226 B1 4/2011 Twitty
D638,891 S 5/2011 Nicolette et al.
7,942,758 B2 5/2011 Nakamura
D639,369 S 6/2011 Miyamichi
D642,643 S 8/2011 Nicolette et al.
D643,485 S 8/2011 Nicolette et al.
D643,892 S 8/2011 McGrorty
D645,104 S 9/2011 Nicolette et al.
8,096,039 B2 1/2012 Soracco et al.
D653,718 S 2/2012 Stokke et al.
D655,361 S 3/2012 Ramsauer
D661,753 S 6/2012 Cameron et al.
D666,260 S 8/2012 Cynn
D672,418 S 12/2012 Rollinson
8,371,958 B2 2/2013 Treadwell
8,376,878 B2 2/2013 Bennett et al.
D688,339 S 8/2013 Hilton et al.
D688,341 S 8/2013 Rollinson
D691,226 S 10/2013 Hilton et al.
8,608,590 B2 12/2013 Hackel et al.
D699,308 S 2/2014 Rollinson
8,696,492 B1 4/2014 Hocknell et al.
D704,782 S 5/2014 Rollinson
8,721,472 B2 5/2014 Kuan et al.
8,790,193 B2 7/2014 Serrano et al.
D711,483 S 8/2014 Wong
D715,388 S 10/2014 Serrano et al.
D722,350 S 2/2015 Schweiger
D722,351 S 2/2015 Parsons et al.
D722,352 S 2/2015 Nicolette et al.
D723,120 S 2/2015 Nicolette
D724,164 S 3/2015 Schweigert et al.
D725,208 S 3/2015 Schweigert
D726,265 S 4/2015 Nicolette
D726,846 S 4/2015 Schweigert
D730,462 S 5/2015 Becktor et al.
D732,122 S 6/2015 Becktor
D732,618 S 6/2015 Becktor et al.
D733,234 S 6/2015 Nicolette
D735,283 S 7/2015 Solheim et al.
D738,447 S 9/2015 Schweigert
D738,449 S 9/2015 Schweigert
D739,487 S 9/2015 Schweigert
D741,426 S 10/2015 Schweigert
D746,926 S 1/2016 Parsons et al.
D748,213 S 1/2016 Parsons et al.
D748,215 S 1/2016 Parsons et al.
9,233,283 B2 1/2016 Schweigert
9,265,996 B1 2/2016 Abbott et al.
D752,697 S 3/2016 Claveran
D753,252 S 4/2016 Schweigert
9,440,124 B2 9/2016 Parsons et al.
9,498,685 B2 11/2016 Abbott et al.
9,566,484 B1 2/2017 Abbott et al.
D783,745 S * 4/2017 Chen D21/743
D791,891 S 7/2017 Davis
D794,146 S 8/2017 Davis
D798,975 S 10/2017 Becktor
D798,976 S 10/2017 Becktor
D798,977 S 10/2017 Becktor
D798,978 S 10/2017 Becktor
D798,979 S 10/2017 Becktor
D798,980 S 10/2017 Becktor
D798,981 S 10/2017 Becktor et al.
D799,619 S 10/2017 Becktor et al.
D802,073 S 11/2017 Toulon
D812,163 S 3/2018 Kroloff
9,987,530 B2 6/2018 Jertson et al.
D824,462 S * 7/2018 Bruschi D21/736
D835,217 S * 12/2018 Nicolette D21/736
D837,911 S * 1/2019 Bruschi D21/736
10,173,105 B2 1/2019 Myers et al.
D839,977 S 2/2019 Rollinson et al.
D844,085 S * 3/2019 Nicolette D21/743
D844,723 S * 4/2019 Nicolette D21/743
D877,831 S * 3/2020 Cameron D21/736
D892,243 S * 8/2020 Rollinson D21/743
D895,037 S * 9/2020 Clarke D21/736
D907,730 S * 1/2021 Rollinson D21/759
D909,504 S * 2/2021 Schweigert D21/736
D919,722 S * 5/2021 Parsons D21/736
D921,141 S * 6/2021 Wang D21/744
D924,993 S * 7/2021 Rollinson D21/759
D924,994 S * 7/2021 Rollinson D21/759
D924,995 S * 7/2021 Rollinson D21/759

D931,962	S *	9/2021	Wang	D21/743
2004/0138003	A1	7/2004	Grace	
2004/0180730	A1	9/2004	Franklin et al.	
2006/0052178	A1	3/2006	Franklin et al.	
2006/0094522	A1	5/2006	Tang et al.	
2006/0223649	A1	10/2006	Rife	
2007/0129163	A1	6/2007	Solari	
2007/0135229	A1	6/2007	Lo et al.	
2007/0142122	A1	6/2007	Bonneau	
2007/0207875	A1	9/2007	Kuan et al.	
2007/0238548	A1	10/2007	Johnson	
2008/0139333	A1	6/2008	Klein	
2008/0146372	A1	6/2008	John	
2008/0176672	A1	7/2008	Roach et al.	
2009/0029800	A1	1/2009	Jones et al.	
2010/0255922	A1	10/2010	Lueders	
2011/0165959	A1	7/2011	Klein	
2013/0165256	A1	6/2013	Stevenson	
2013/0210537	A1	8/2013	Ainscough et al.	
2015/0057100	A1	2/2015	Serrano et al.	
2015/0258390	A1	9/2015	DeFrancesco, Jr.	
2015/0306477	A1	10/2015	Parsons et al.	
2016/0016050	A1	1/2016	Rife	
2018/0001163	A1	1/2018	Becktor et al.	

FOREIGN PATENT DOCUMENTS

JP	2004223184	A	8/2004
JP	2005160691	A	6/2005
KR	200377377	Y1	3/2005
KR	200403045	Y1	12/2005
KR	20100065481	A	6/2010
KR	101773069	B1	8/2017

OTHER PUBLICATIONS

International Search Report and Written Opinion issued in connection with corresponnding application No. PCT/US15/27841 dated Jul. 30, 2015 (14 pages).

Plugged In Golf (2015 Bettinardi Putters Review) [online]. Mar. 3, 2015, [retrieve Nov. 25, 2019] Retrieve from the internet: .

TourSpecGolf (Gold's Factory Multi Weigted Custom Putter), Published Nov. 20, 2010 [http://blog.tourspecgolf.com/golds-factory-multi-weighted-custom-putter/], Retrieved May 17, 2020.

U.S. Appl. No. 29/523,587, Schweigert, "Golf Club Head," filed Apr. 10, 2015.

* cited by examiner

Primary Examiner — Mitchell I. Siegel

(57) **CLAIM**

The ornamental design for a golf club head, as shown and described.

DESCRIPTION

FIG. **1** is a top perspective view of a golf club head;
FIG. **2** is a bottom perspective view of the golf club head of FIG. **1**;
FIG. **3** is a front elevational view of the golf club head of FIG. **1**;
FIG. **4** is a rear elevational view of the golf club head of FIG. **1**;
FIG. **5** is a top view of the golf club head of FIG. **1**;
FIG. **6** is a bottom view of the golf club head of FIG. **1**;
FIG. **7** is a left side view of the golf club head of FIG. **1**;
FIG. **8** is a right side view of the golf club head of FIG. **1**;
FIG. **9** is a top perspective view of a second embodiment of a golf club head;
FIG. **10** is a bottom perspective view of the golf club head of FIG. **9**;
FIG. **11** is a front elevational view of the golf club head of FIG. **9**;
FIG. **12** is a rear elevational view of the golf club head of FIG. **9**;
FIG. **13** is a top view of the golf club head of FIG. **9**;
FIG. **14** is a bottom view of the golf club head of FIG. **9**;
FIG. **15** is a left side view of the golf club head of FIG. **9**;
FIG. **16** is a right side view of the golf club head of FIG. **9**;
FIG. **17** is a top perspective view of a third embodiment of a golf club head;
FIG. **18** is a bottom perspective view of the golf club head of FIG. **17**;
FIG. **19** is a front elevational view of the golf club head of FIG. **17**;
FIG. **20** is a rear elevational view of the golf club head of FIG. **17**;
FIG. **21** is a top view of the golf club head of FIG. **17**;
FIG. **22** is a bottom view of the golf club head of FIG. **17**;
FIG. **23** is a left side view of the golf club head of FIG. **17**; and,
FIG. **24** is a right side view of the golf club head of FIG. **17**.

The broken line showing is included for the purpose of illustrating unclaimed subject matter and forms no part of the claimed design.

1 Claim, 12 Drawing Sheets

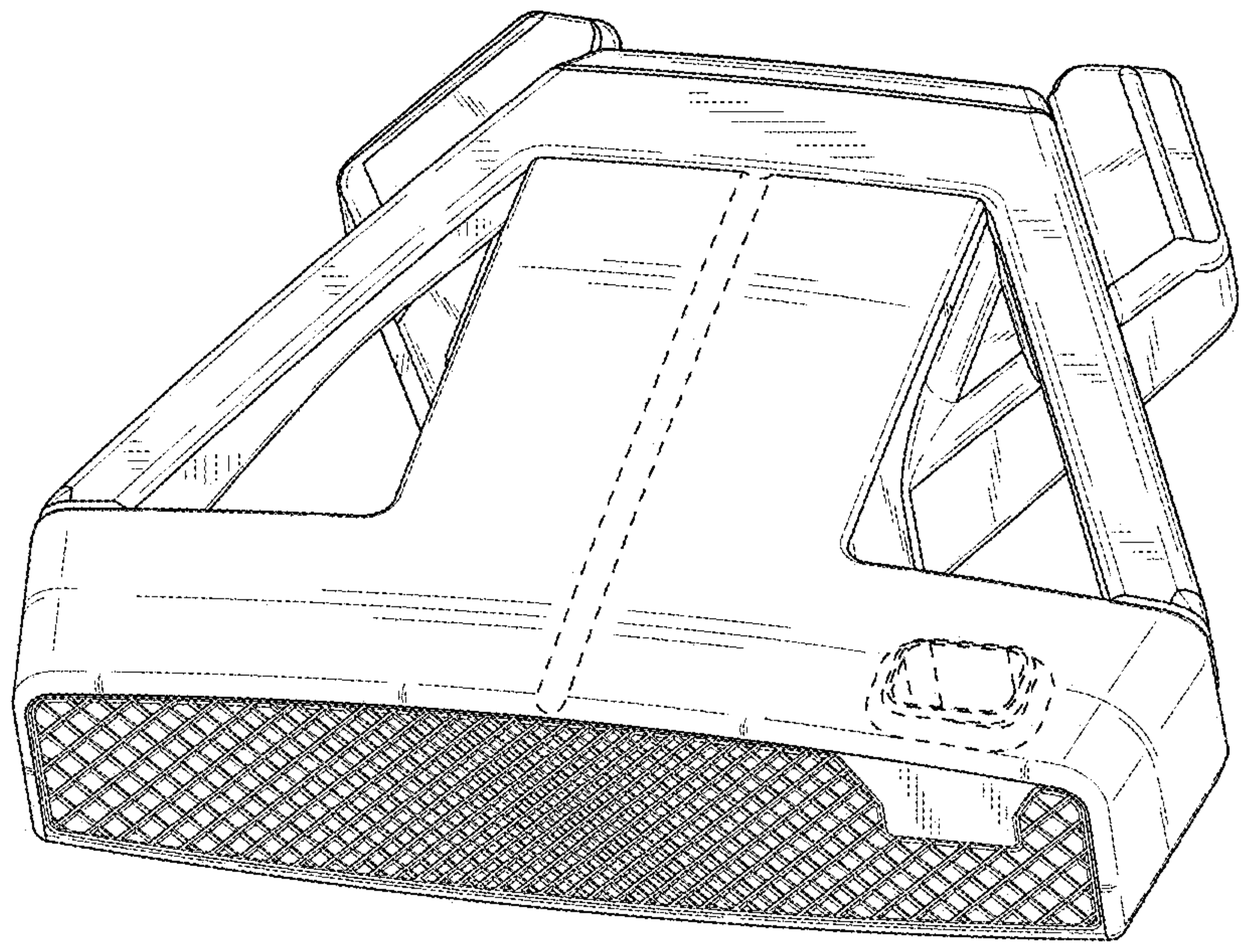

FIG. 1

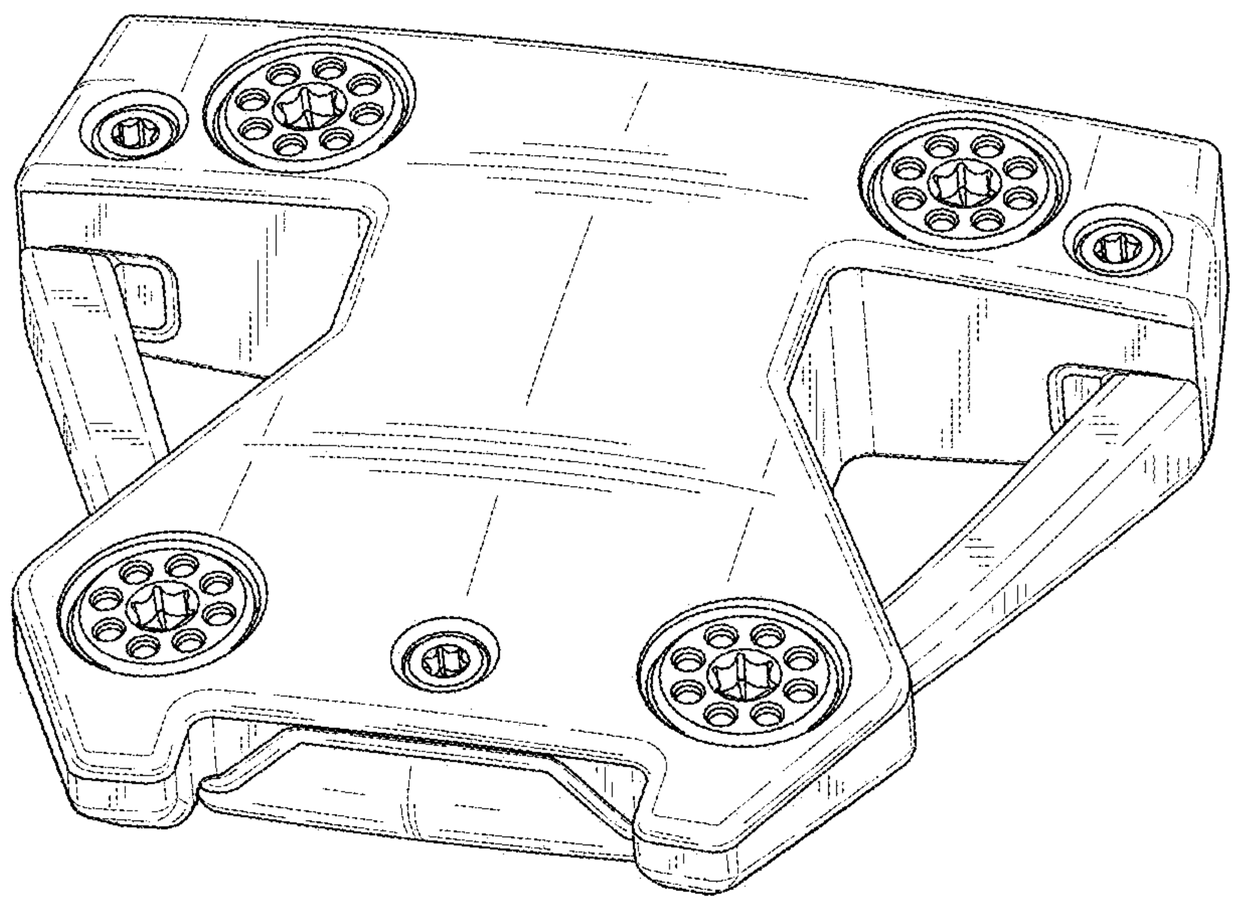

FIG. 2

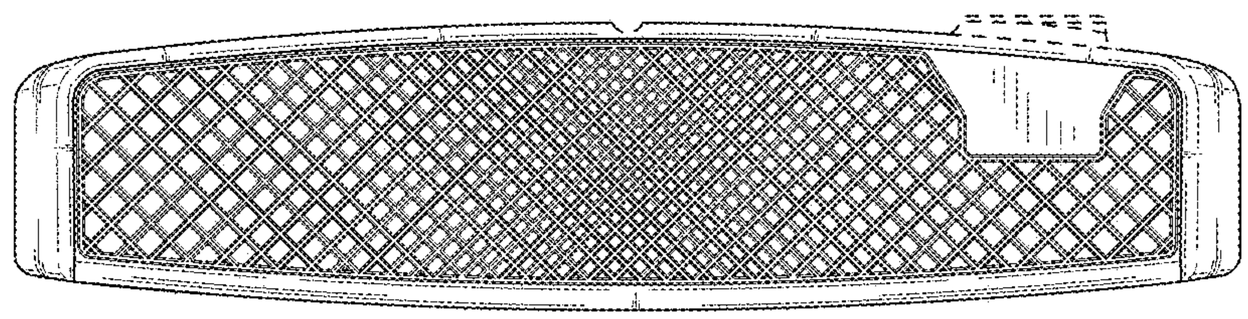

FIG. 3

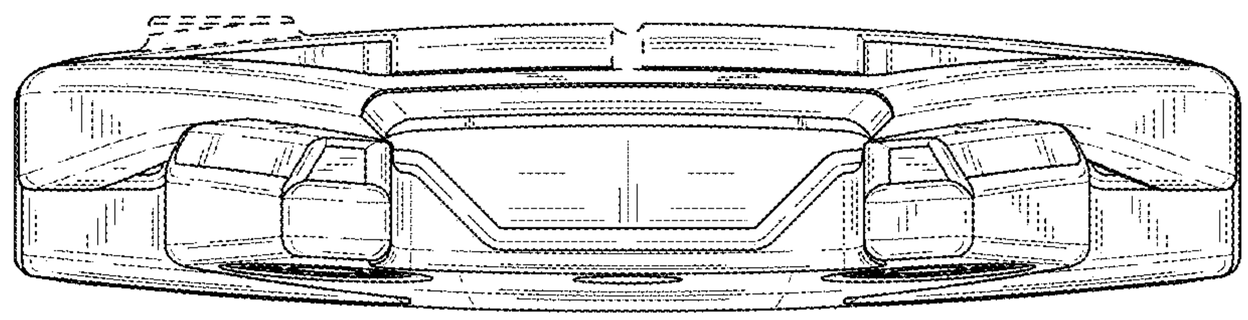

FIG. 4

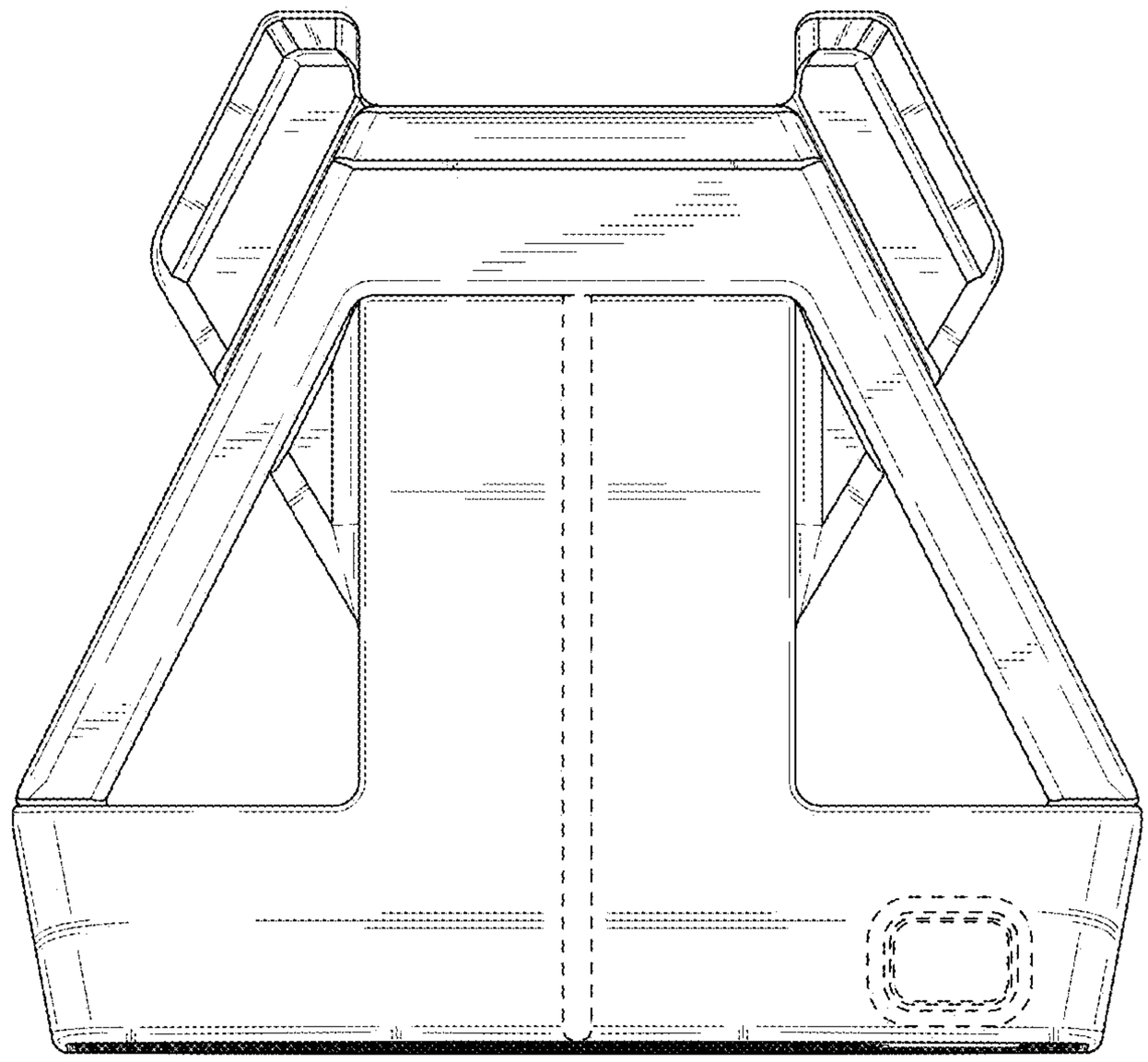

FIG. 5

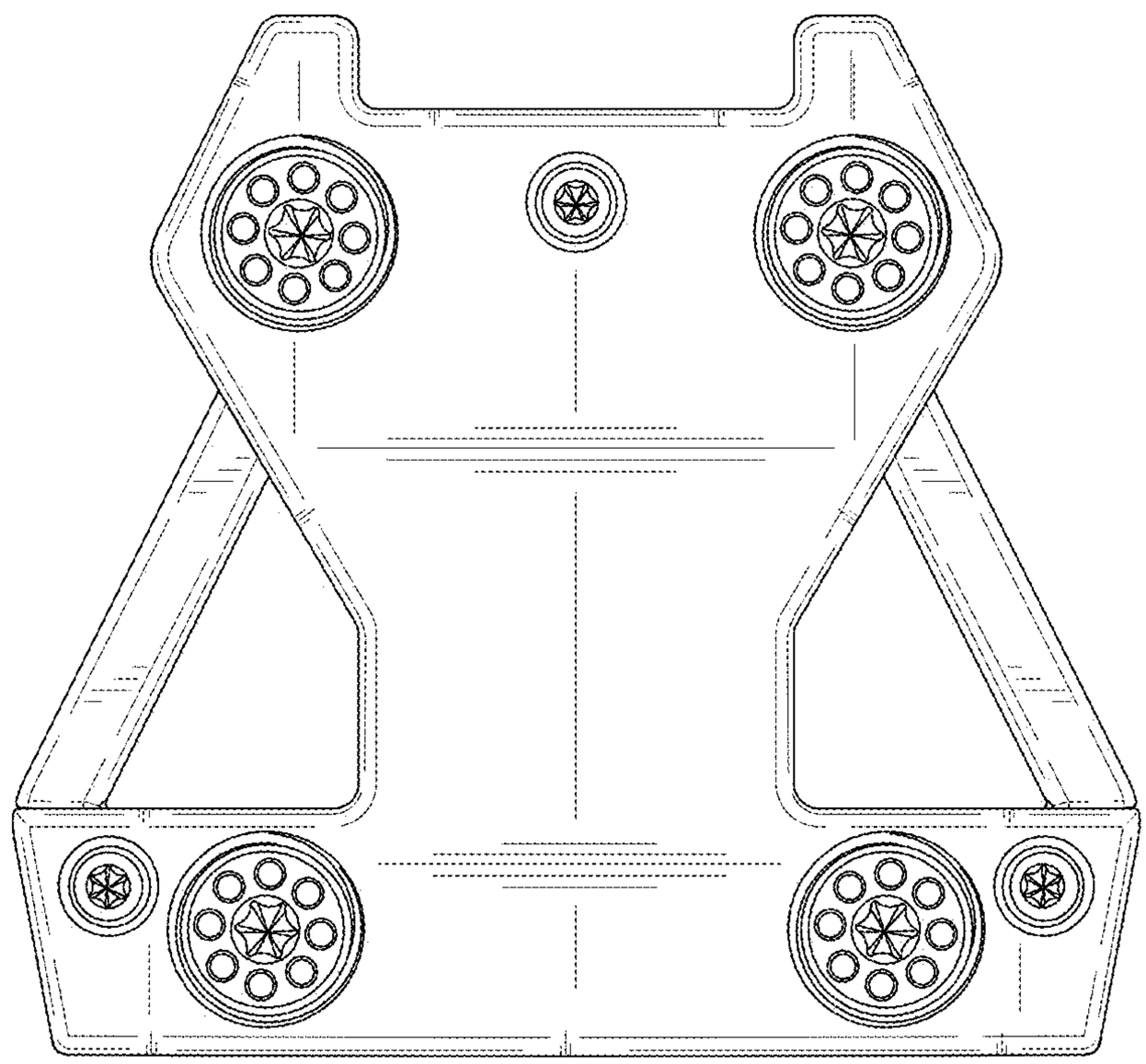

FIG. 6

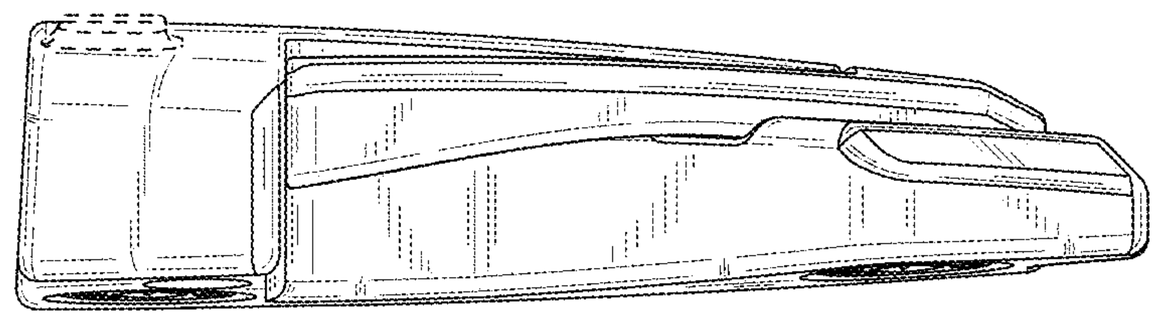

FIG. 7

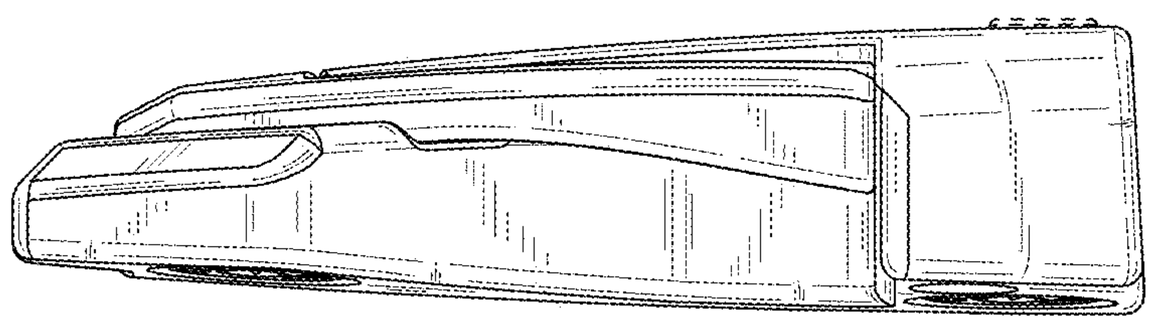

FIG. 8

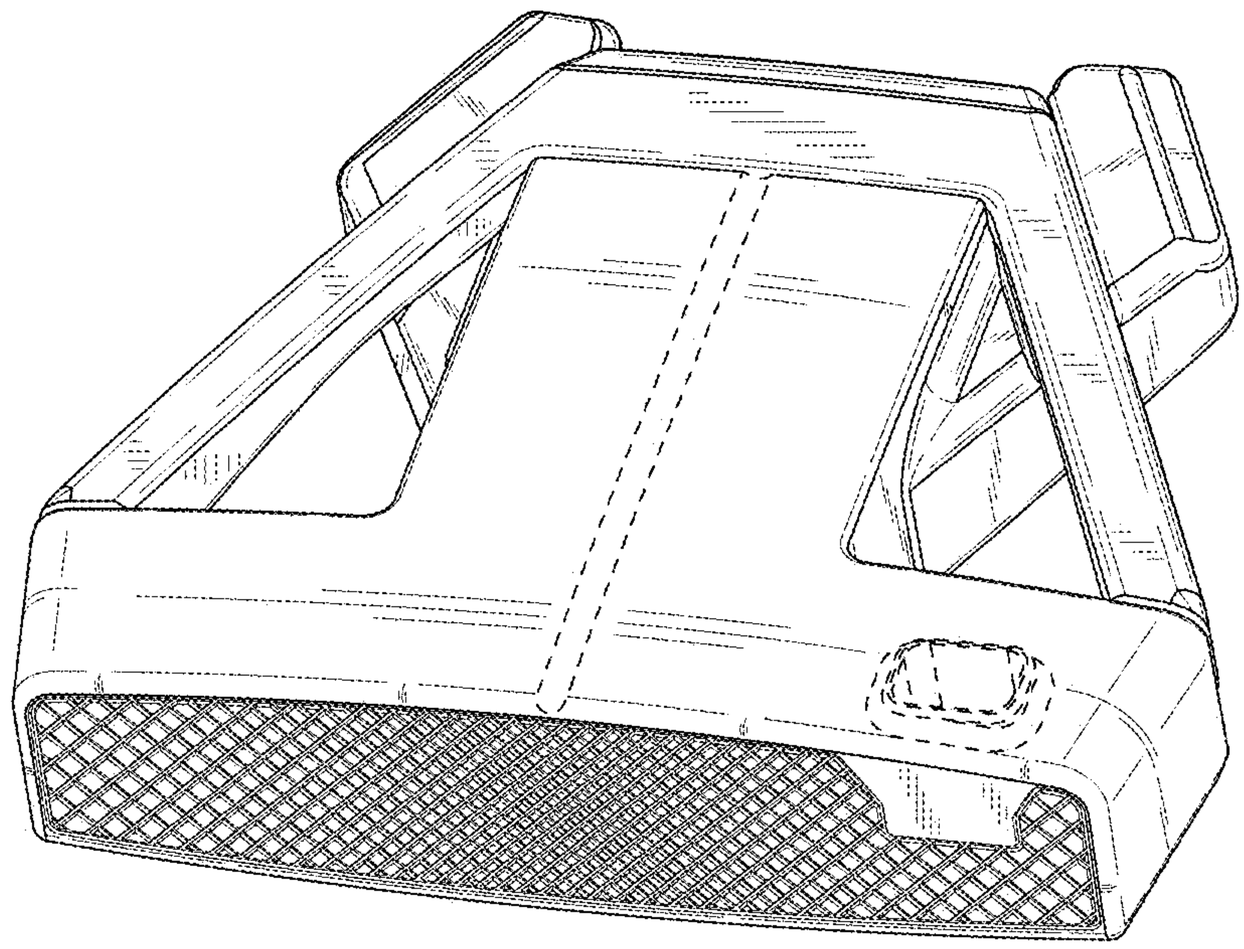

FIG. 9

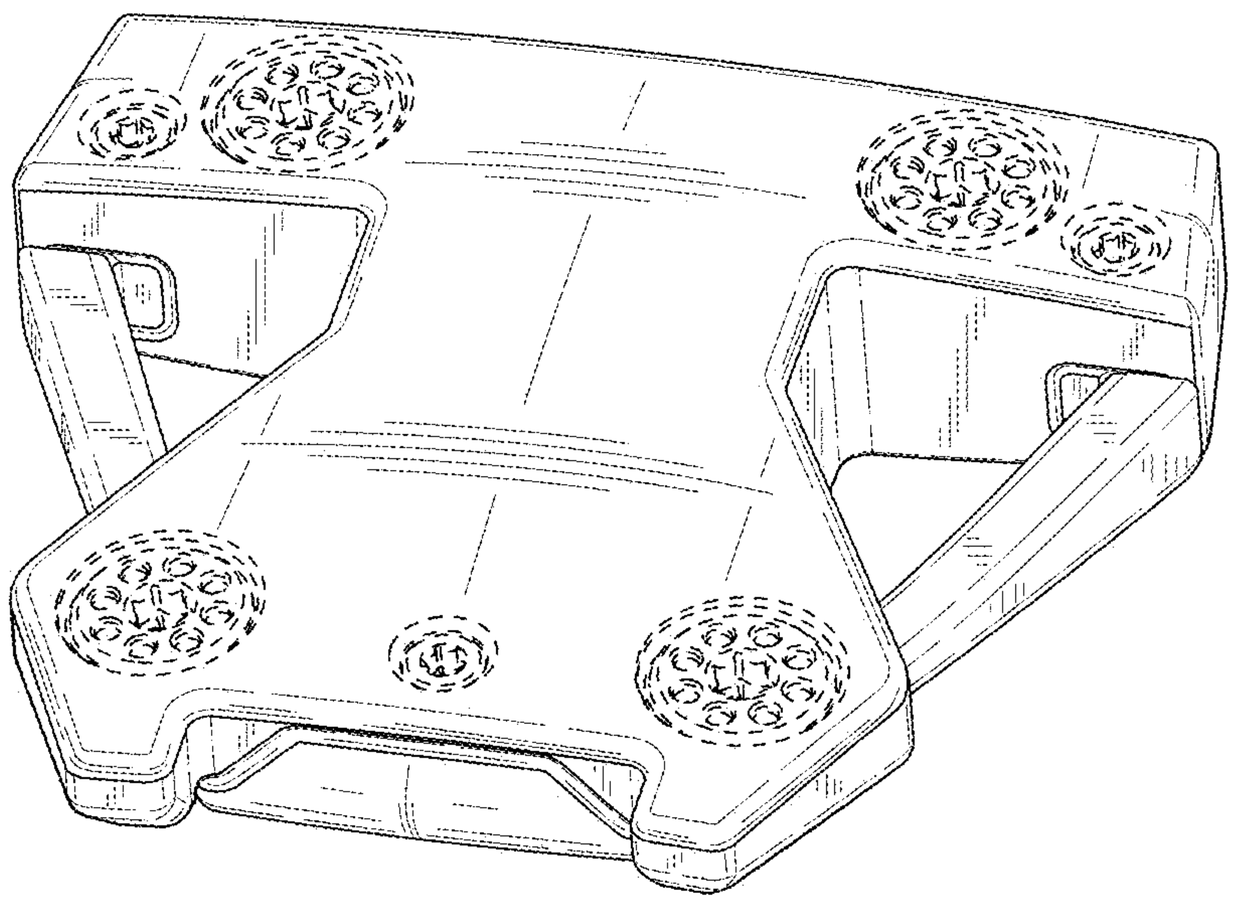

FIG. 10

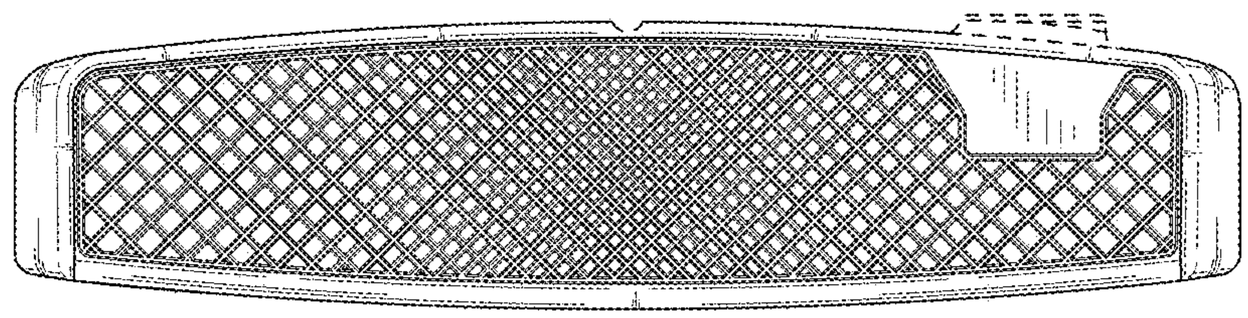

FIG. 11

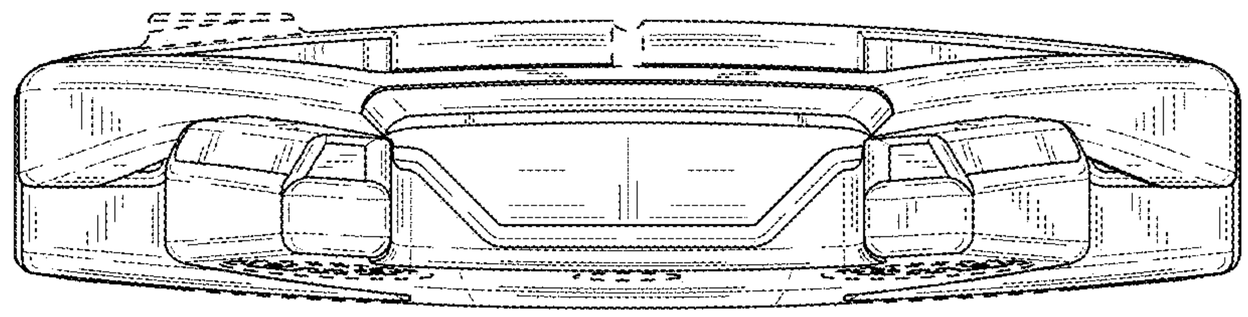

FIG. 12

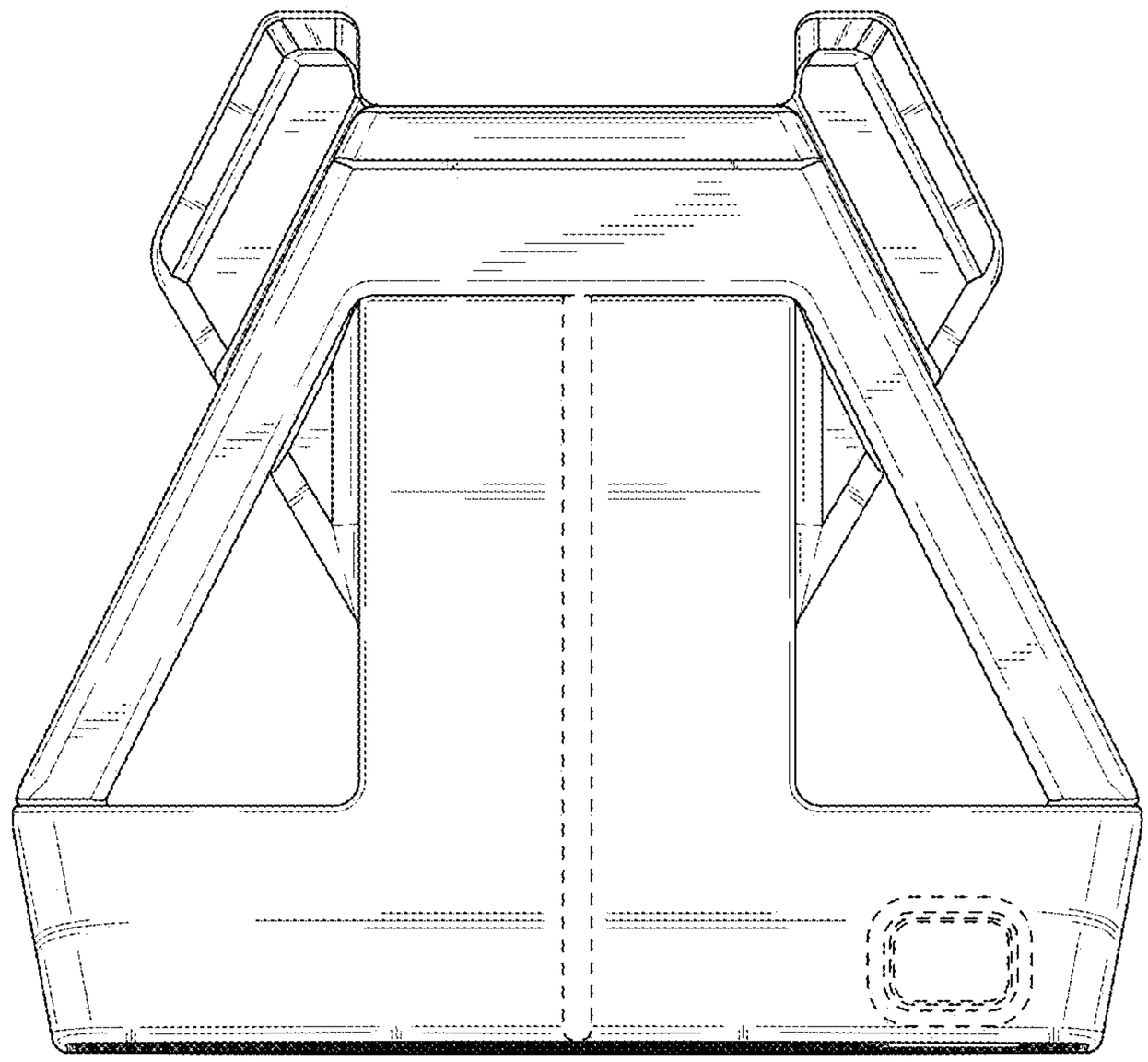

FIG. 13

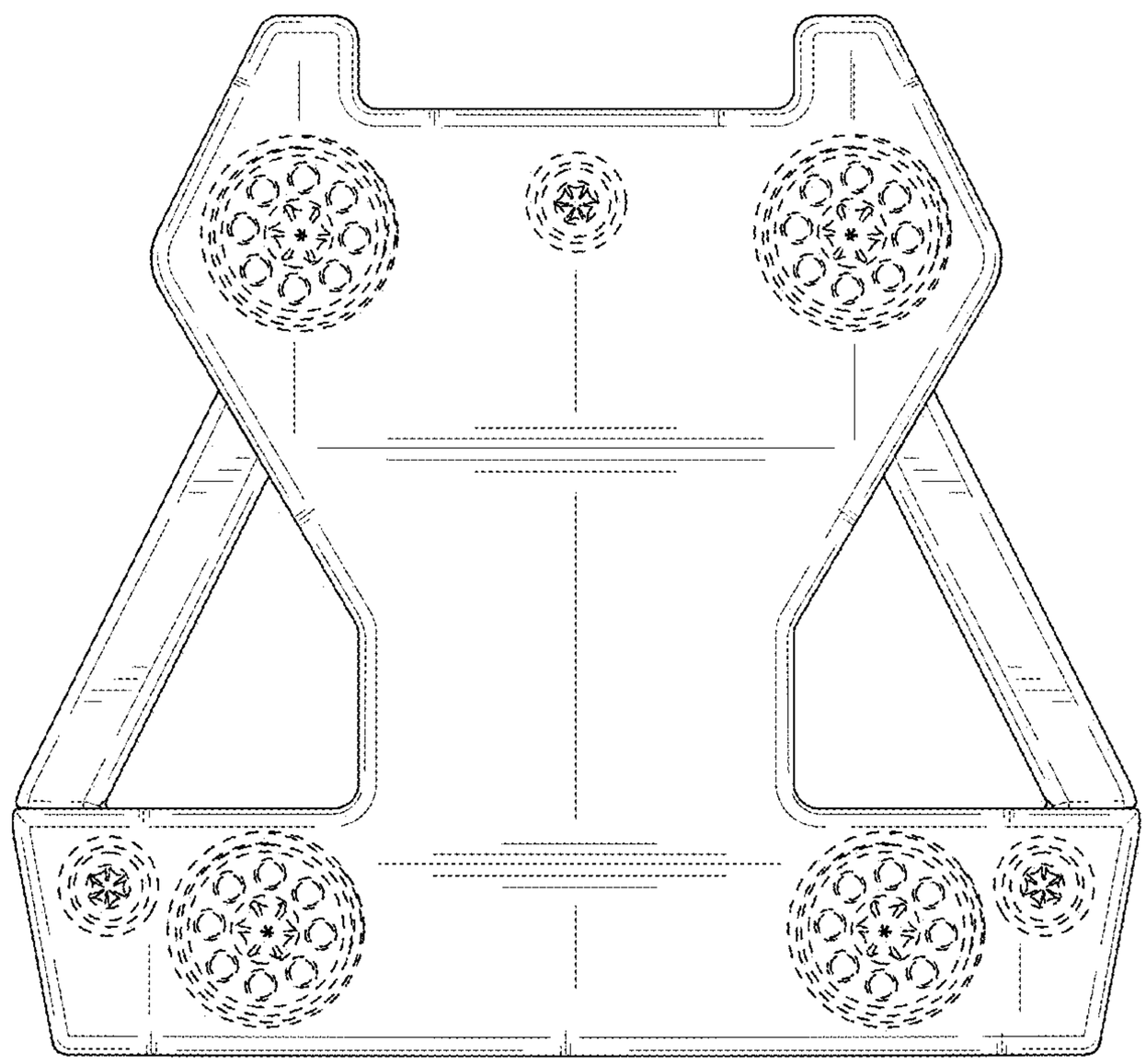

FIG. 14

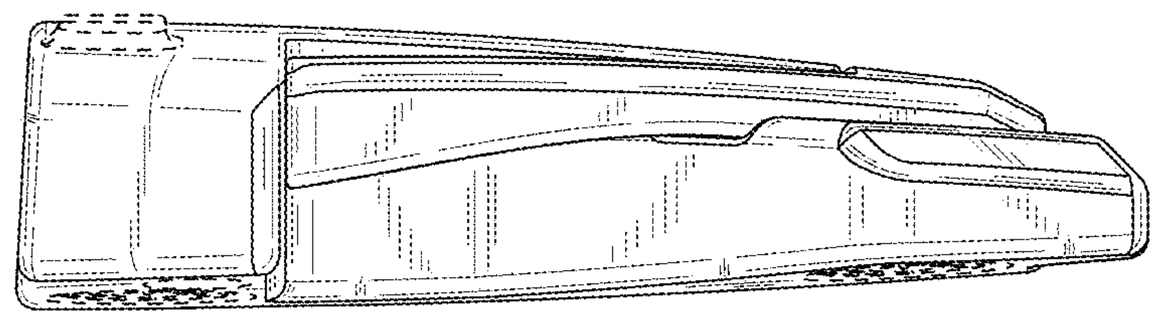

FIG. 15

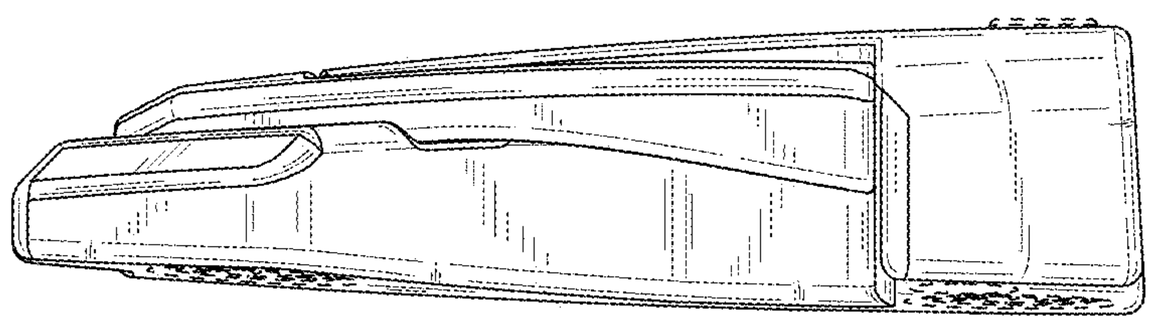

FIG. 16

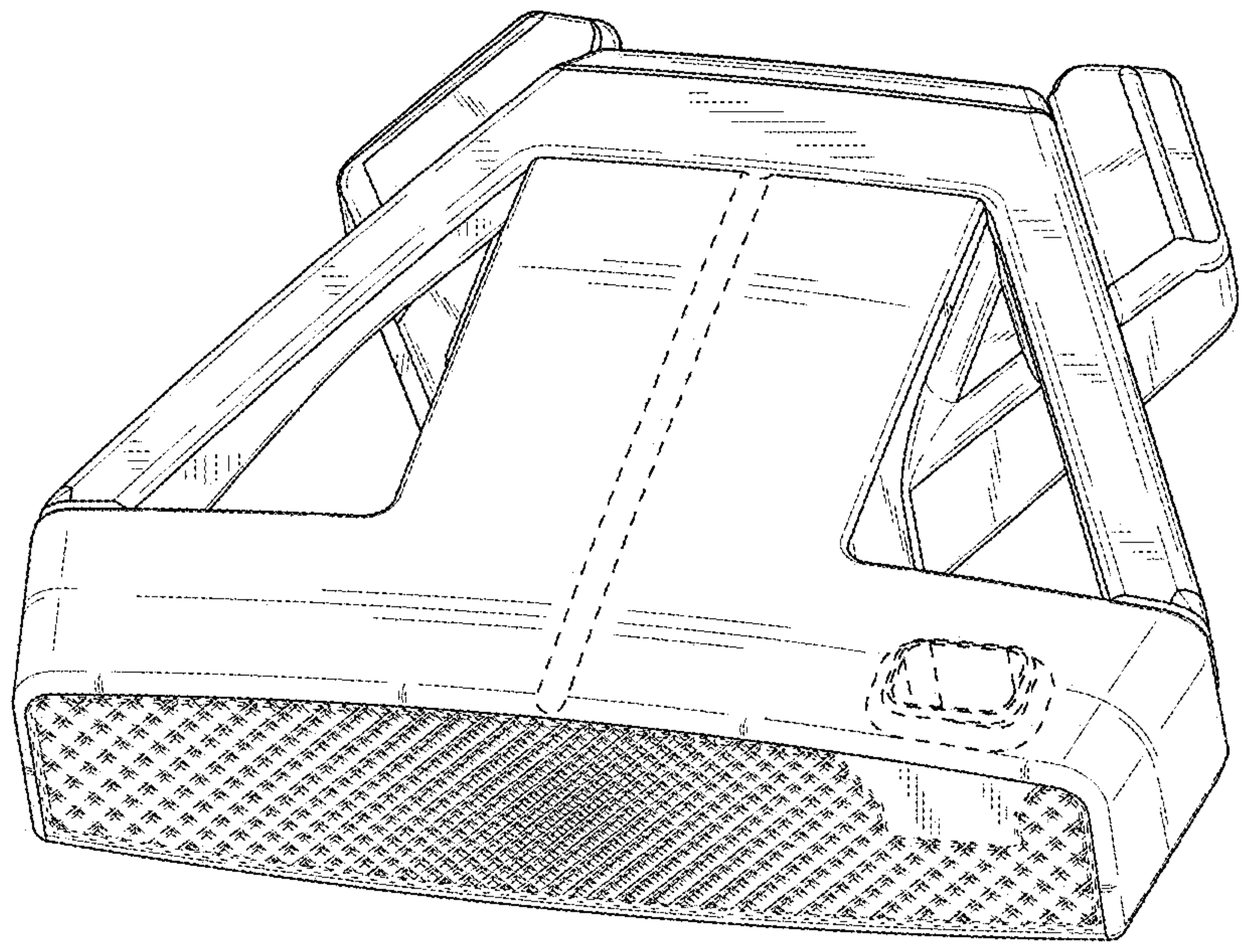

FIG. 17

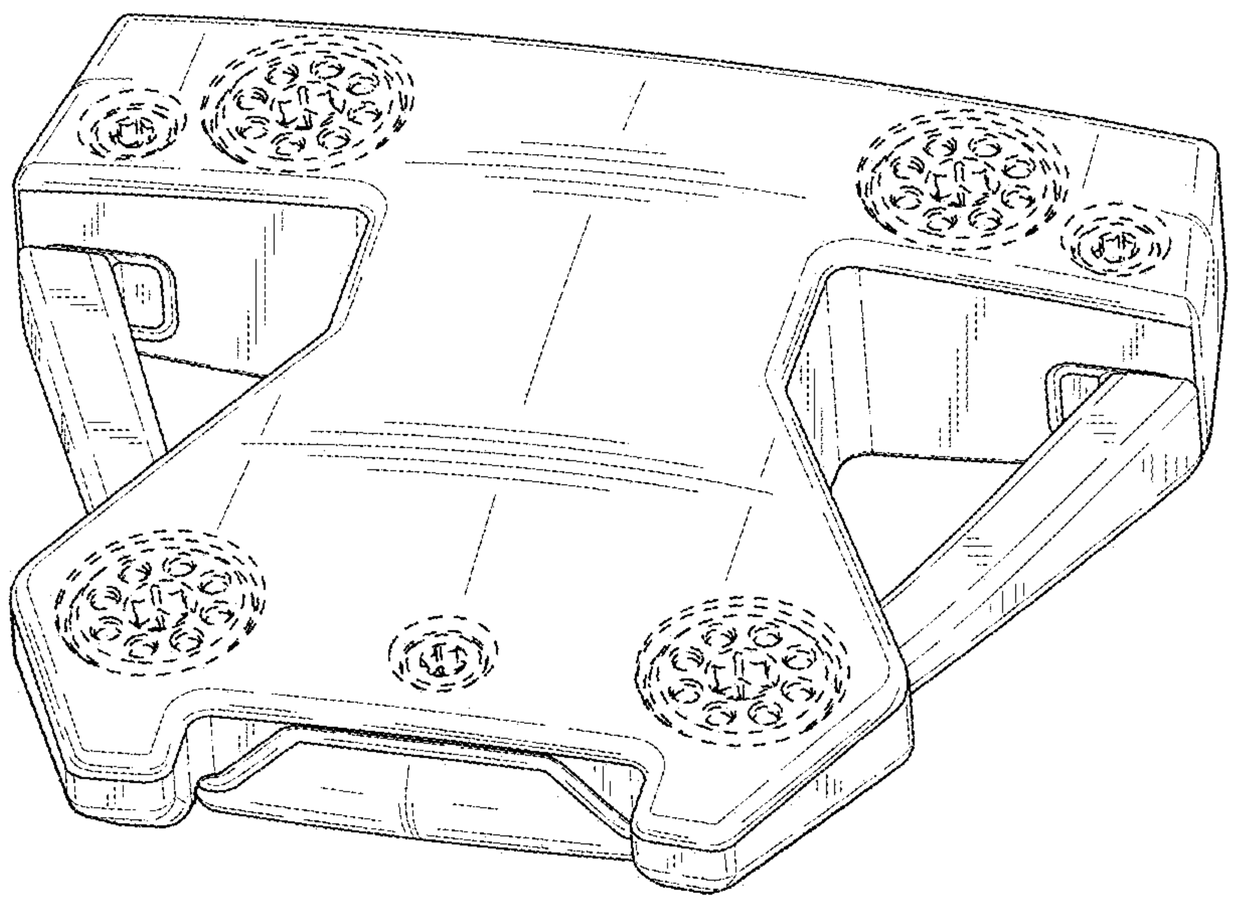

FIG. 18

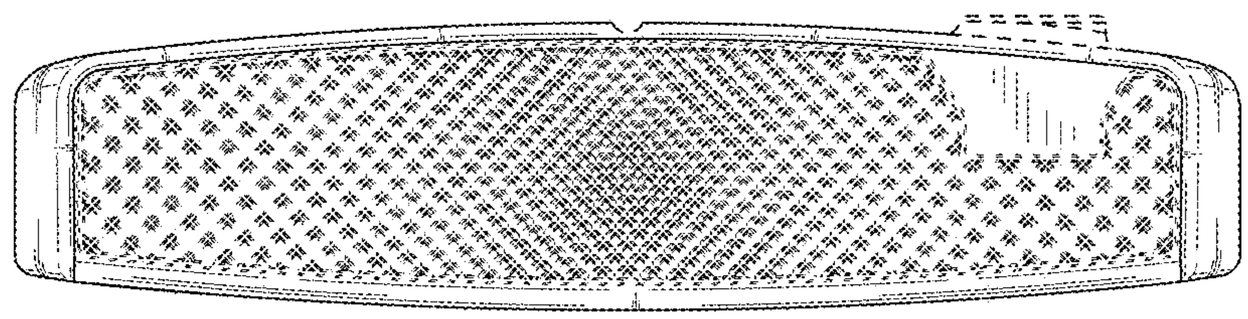

FIG. 19

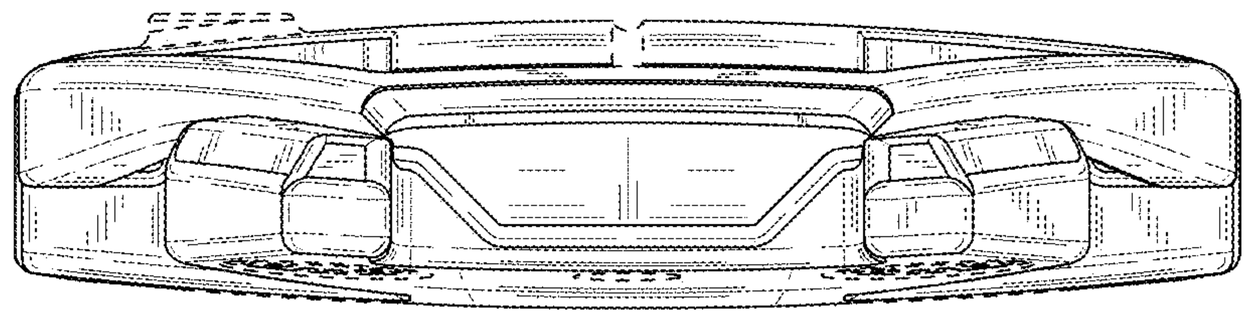

FIG. 20

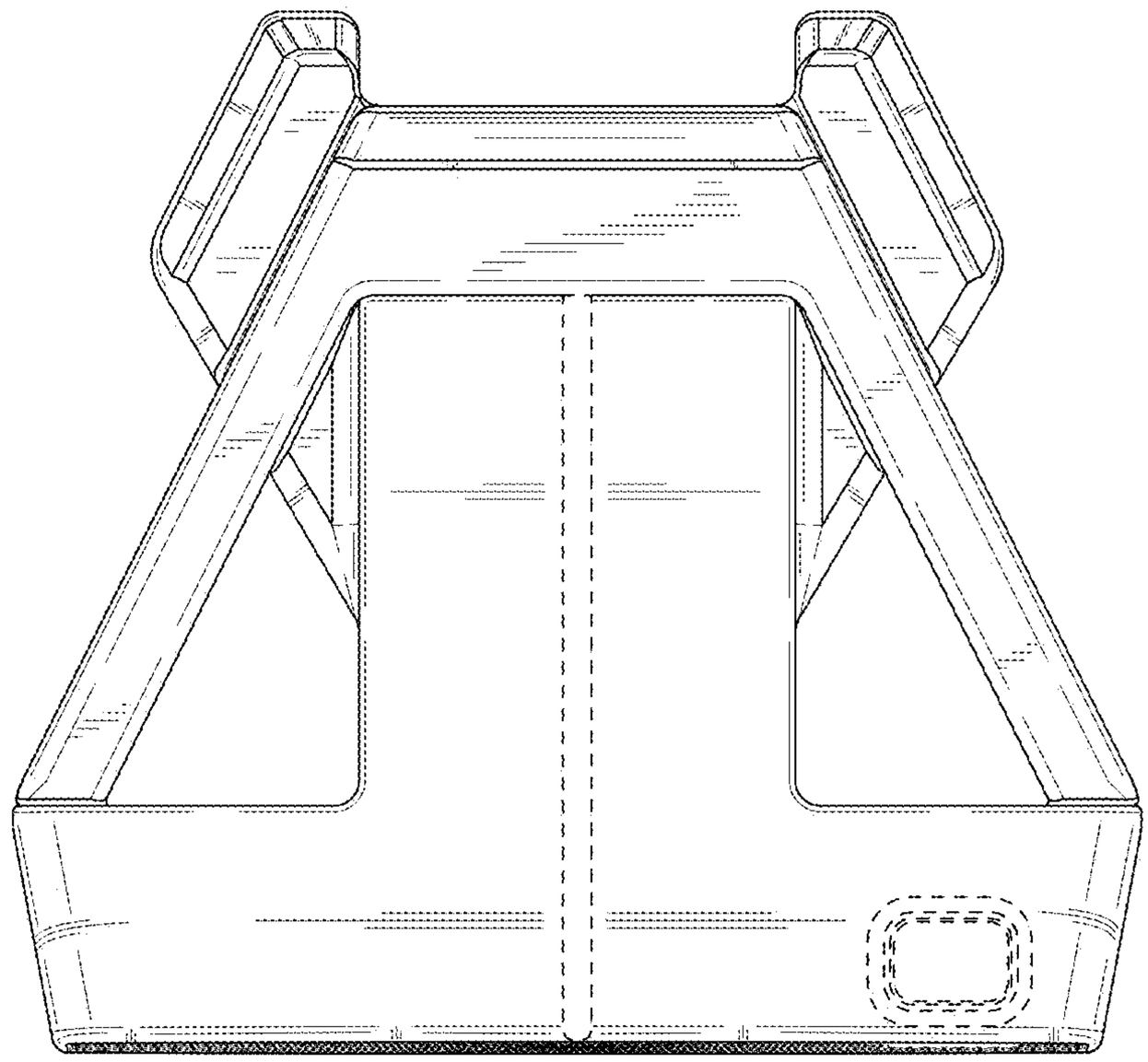

FIG. 21

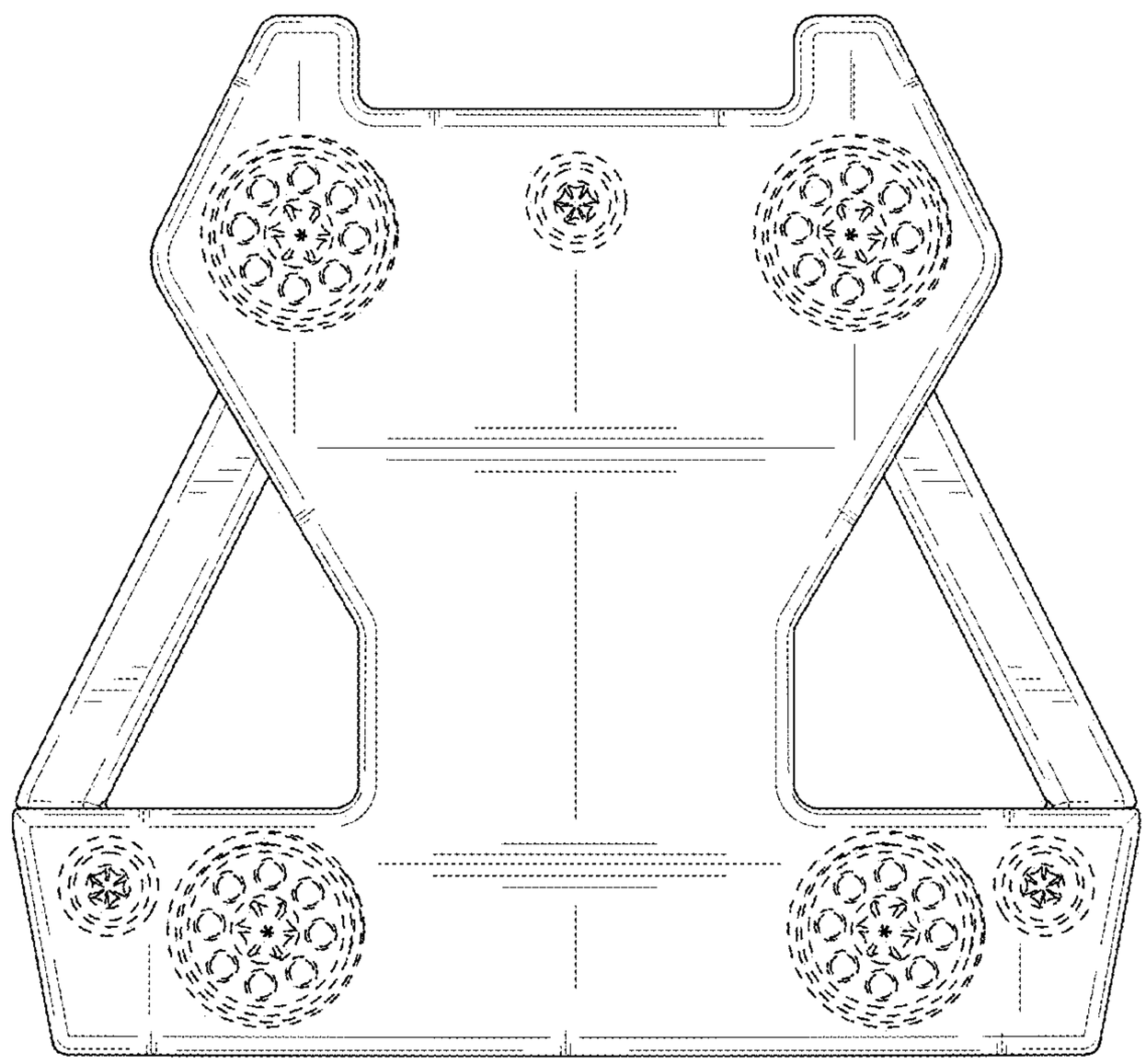

FIG. 22

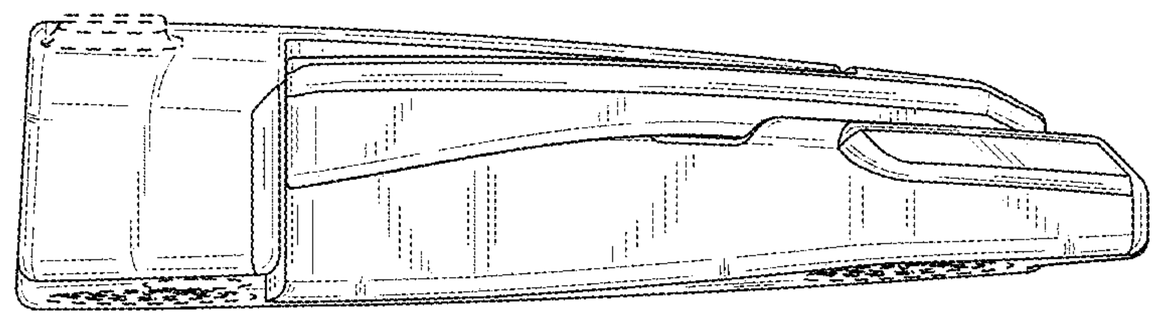

FIG. 23

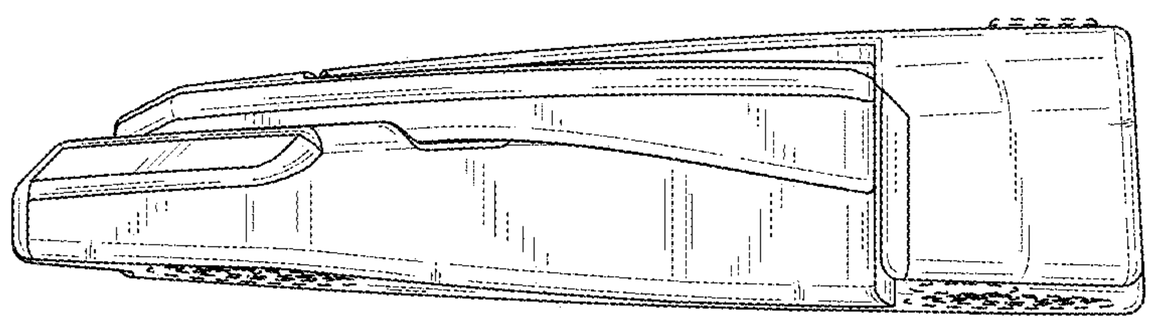

FIG. 24