US00D944832S

(12) United States Design Patent

Ranka et al.

(10) Patent No.: US D944,832 S
(45) Date of Patent: ** *Mar. 1, 2022

(54) **DISPLAY SCREEN OR PORTION THEREOF WITH TRANSITIONAL GRAPHICAL USER INTERFACE**

(71) Applicant: **Google LLC**, Mountain View, CA (US)

(72) Inventors: **Nishant Ranka**, Sunnyvale, CA (US); **Aaron Brako**, San Francisco, CA (US); **Jessica W. Huang**, Oakland, CA (US); **Talía Brigneti Rouillon**, San Francisco, CA (US); **Colin Keogh**, Boston, MA (US); **Lucas Galo**, San Francisco, CA (US); **Nilanjana Banerjee**, Sunnyvale, CA (US); **Rahul Choudhury**, Mountain View, CA (US); **Pierre-Laurent Coirier**, Attleboro, MA (US)

(73) Assignee: **GOOGLE LLC**, Mountain View, CA (US)

(*) Notice: This patent is subject to a terminal disclaimer.

(**) Term: **15 Years**

(21) Appl. No.: **29/738,653**

(22) Filed: **Jun. 18, 2020**

(51) **LOC (13) Cl.** **14-04**

(52) **U.S. Cl.**
USPC **D14/486**; D14/488

(58) **Field of Classification Search**
USPC D14/485–495
(Continued)

(56) **References Cited**

U.S. PATENT DOCUMENTS

D445,426 S * 7/2001 Wang D14/486
D556,768 S * 12/2007 Morris D14/487
(Continued)

Primary Examiner — Katherine A Holbrow
(74) *Attorney, Agent, or Firm* — Leason Ellis LLP

(57) **CLAIM**

The ornamental design for a display screen or portion thereof with transitional graphical user interface, as shown and described.

DESCRIPTION

FIG. **1** is a front view of a first image in a sequence for a display screen or portion thereof with transitional graphical user interface according to a first embodiment; and
FIG. **2** is a front view of a second image in the sequence thereof.
FIG. **3** is a front view of a first image in a sequence for a display screen or portion thereof with transitional graphical user interface according to a second embodiment; and
FIG. **4** is a front view of a second image in the sequence thereof.
FIG. **5** is a front view of a first image in a sequence for a display screen or portion thereof with transitional graphical user interface according to a third embodiment; and
FIG. **6** is a front view of a second image in the sequence thereof.
FIG. **7** is a front view of a first image in a sequence for a display screen or portion thereof with transitional graphical user interface according to a fourth embodiment; and,
FIG. **8** is a front view of a second image in the sequence thereof.
The appearance of the claimed design transitions between the images shown in FIGS. **1** to **2**, between the images shown in FIGS. **3** through **4**, between the images shown in FIGS. **5** through **6**, and between the images shown in FIGS. **7** through **8**, respectively. The process or period in which one image transitions to another forms no part of the claimed design.
The outermost broken line rounded rectangle showing an electronic device illustrates environmental subject matter. The broken line showing a display screen, and all other broken lines showing portions of the graphical user interface illustrate portions of the article. None of the aforementioned broken line subject matter forms part of the claimed design.

1 Claim, 8 Drawing Sheets

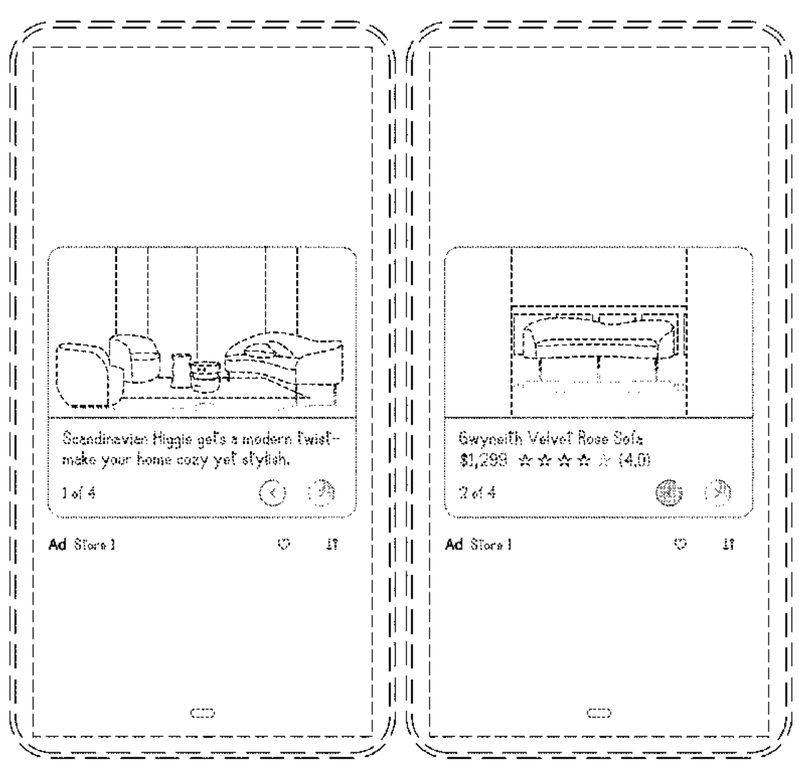

(58) **Field of Classification Search**
CPC G10H 1/0008; G06F 17/30053
See application file for complete search history.

(56) **References Cited**

U.S. PATENT DOCUMENTS

D599,373	S	*	9/2009	Kobayashi	D14/486
D616,895	S	*	6/2010	Ehrler	D14/486
D647,534	S	*	10/2011	Doll	D14/486
D766,310	S	*	9/2016	Jiang	D14/488
D778,929	S	*	2/2017	Mensinger	D14/486
D780,804	S	*	3/2017	Cho	D14/489
D831,059	S	*	10/2018	Bao	D14/486
D831,068	S	*	10/2018	Khandelwal	D14/489
D835,657	S	*	12/2018	Anzures	D14/486
D863,324	S	*	10/2019	Kang	D14/485
D868,089	S	*	11/2019	Jang	D14/486
D870,771	S	*	12/2019	Butcher	D14/489
D876,456	S	*	2/2020	Broughton	D14/486
D877,181	S	*	3/2020	Gaiser	D14/487
D882,593	S	*	4/2020	Fatnani	D14/485
D889,487	S	*	7/2020	Clediere	D14/485
D894,210	S	*	8/2020	Dascola	D14/486
D898,074	S	*	10/2020	Spors	D14/488
D900,148	S	*	10/2020	Bao	D14/488
D906,351	S	*	12/2020	Paul	D14/485
D908,712	S	*	1/2021	Fischbach	D14/485
D914,039	S	*	3/2021	Zimmerman	D14/485
D914,049	S	*	3/2021	Paul	D14/487
D918,264	S	*	5/2021	Paul	D14/492
D921,657	S	*	6/2021	Jang	D14/486
D923,640	S	*	6/2021	Tsai	D14/485

* cited by examiner

Scandinavian Hygge gets a modern twist–
make your home cozy yet stylish.
1 of 4
Ad Store 1

FIG. 1

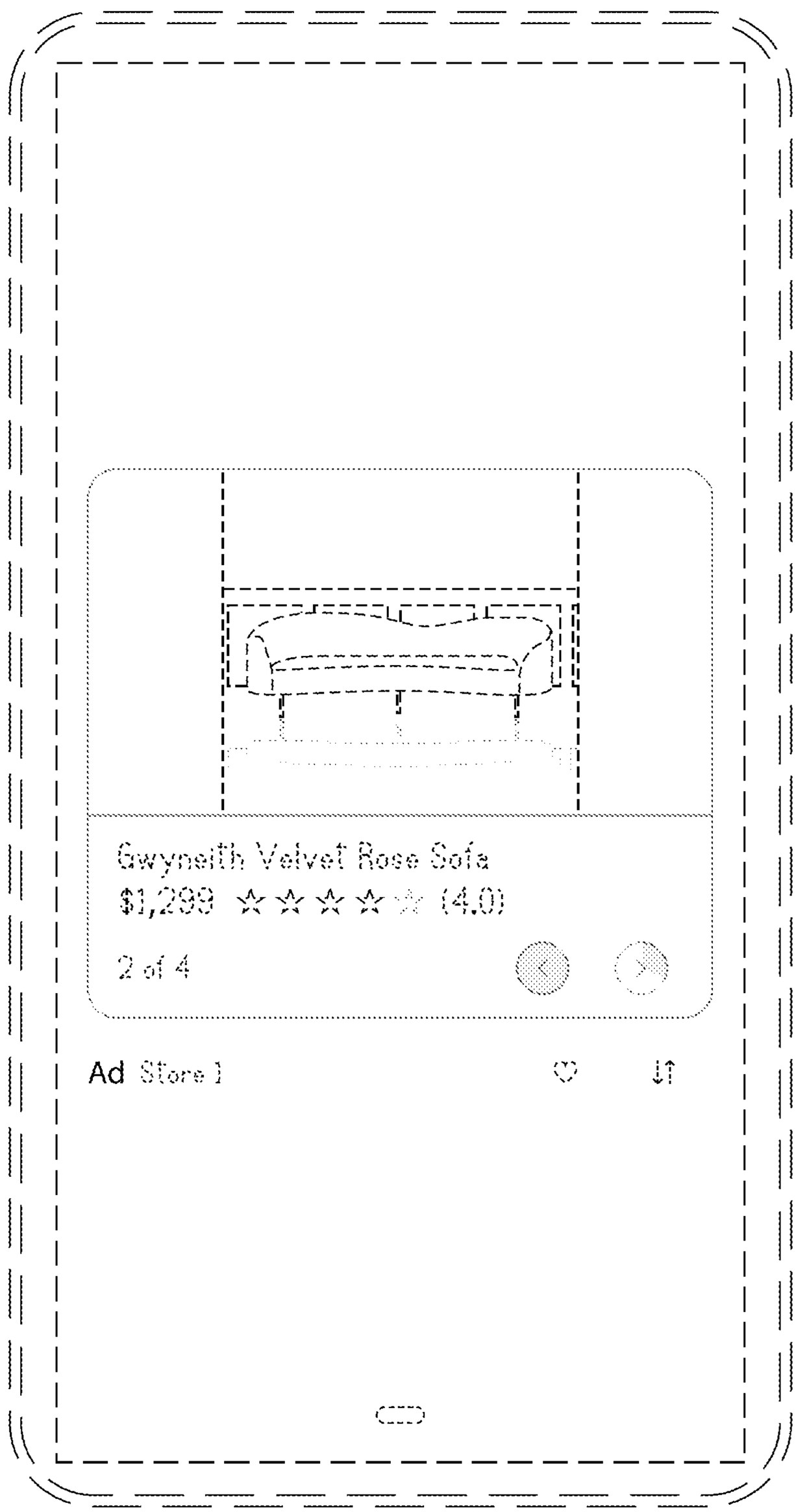

FIG. 2

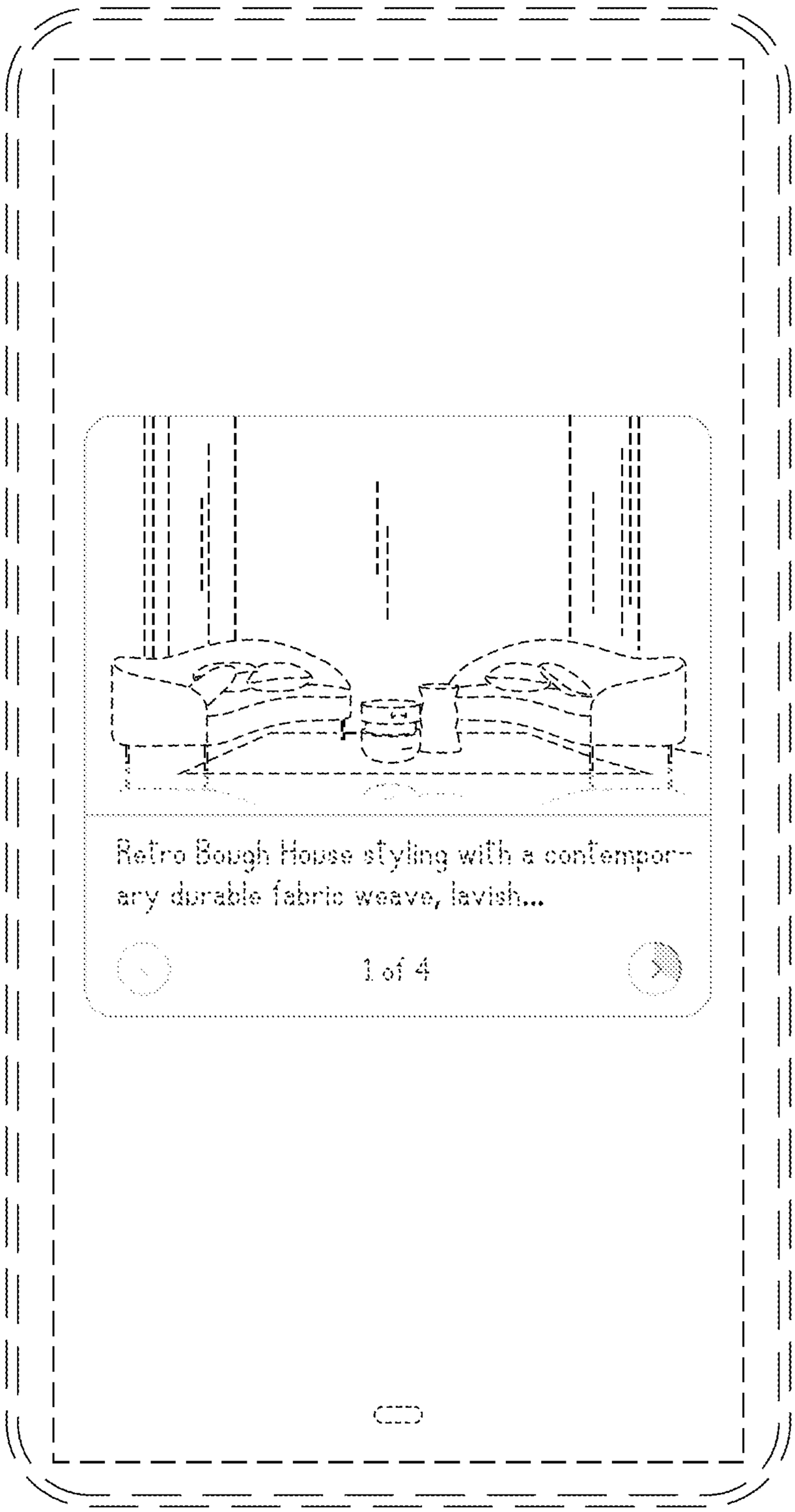
Retro Bough House styling with a contemporary durable fabric weave, lavish...
1 of 4

FIG. 3

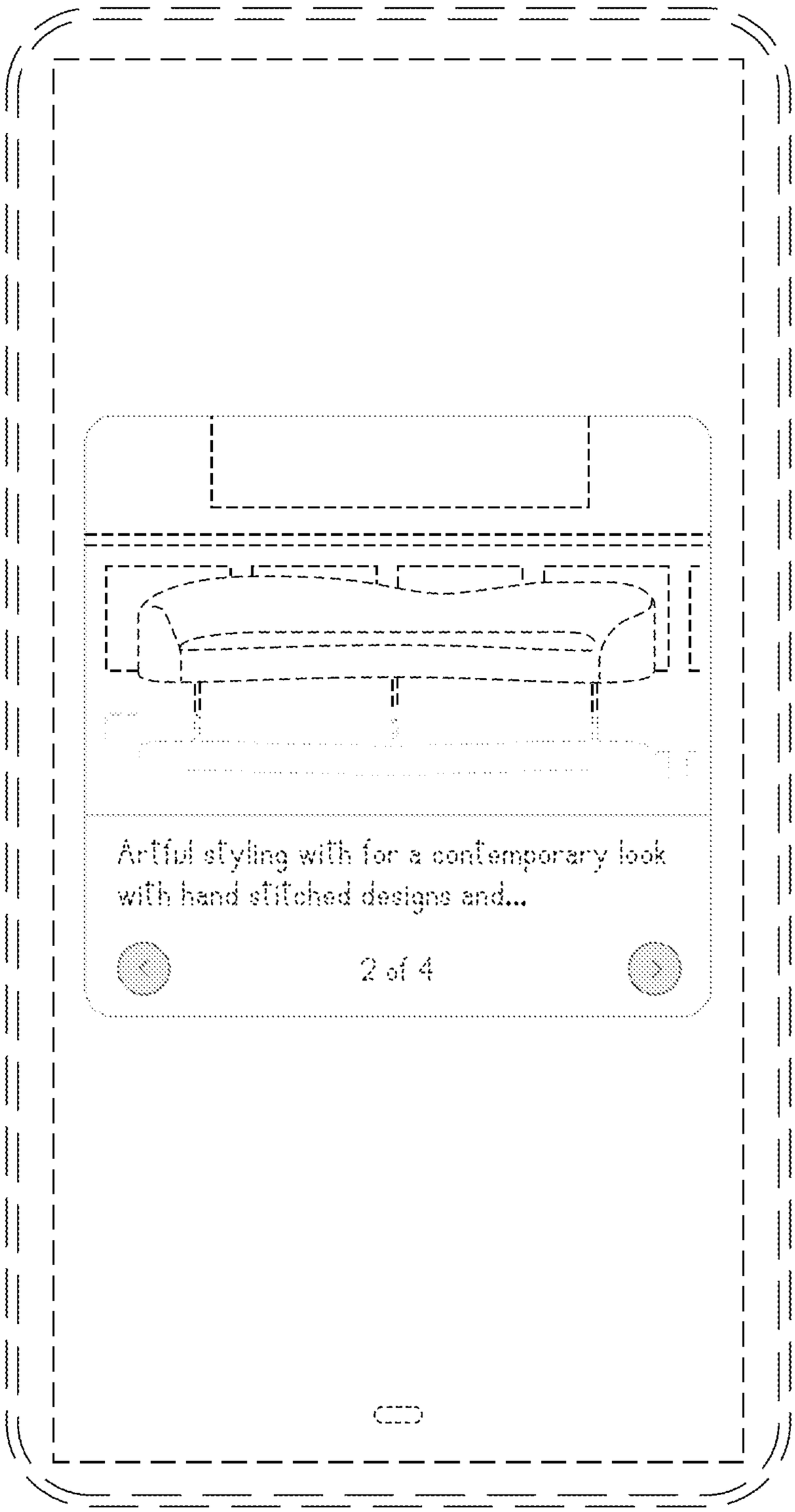
Artful styling with for a contemporary look
with hand stitched designs and...
2 of 4

FIG. 4

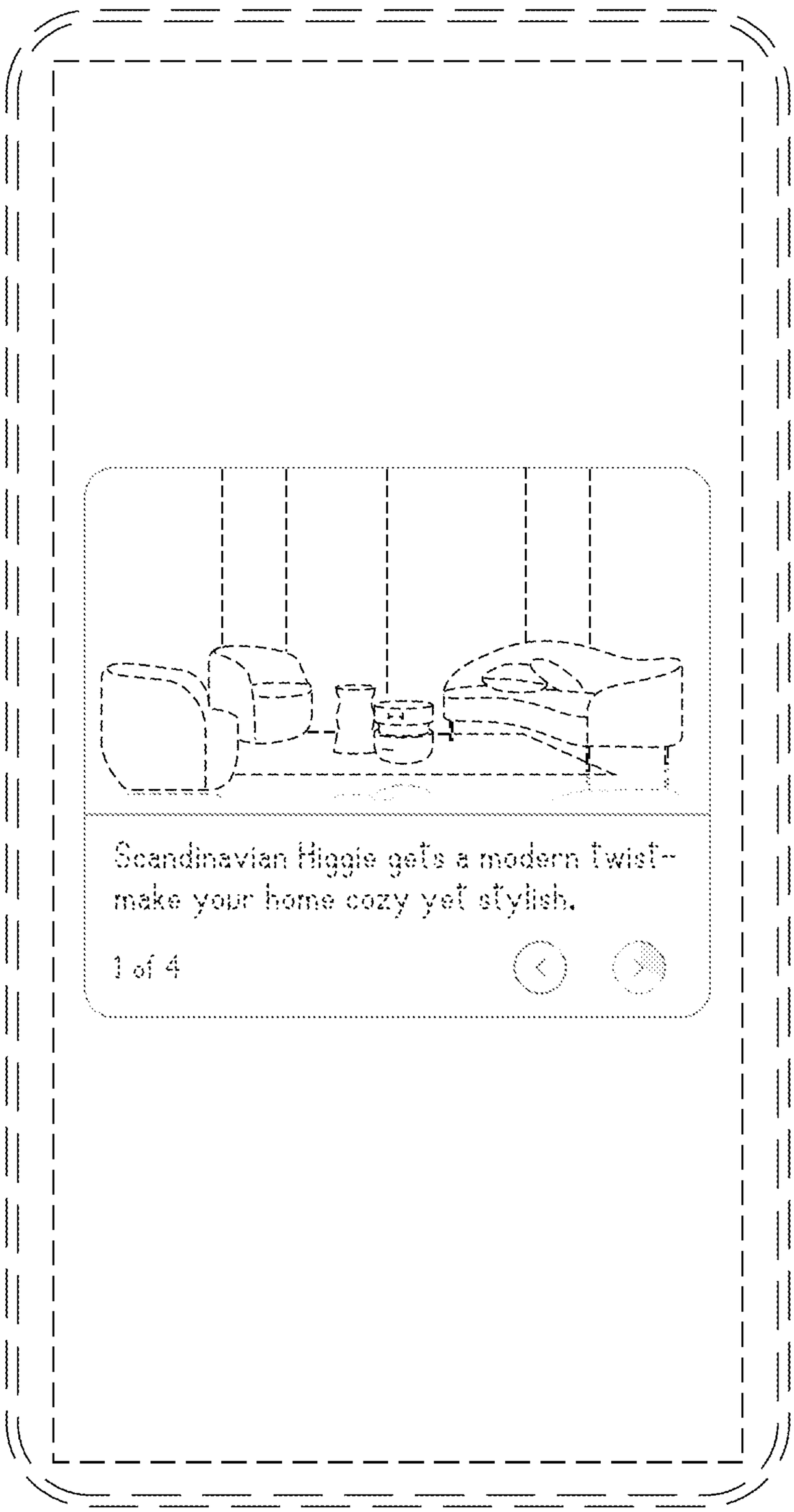
Scandinavian Hygge gets a modern twist–
make your home cozy yet stylish.
1 of 4

FIG. 5

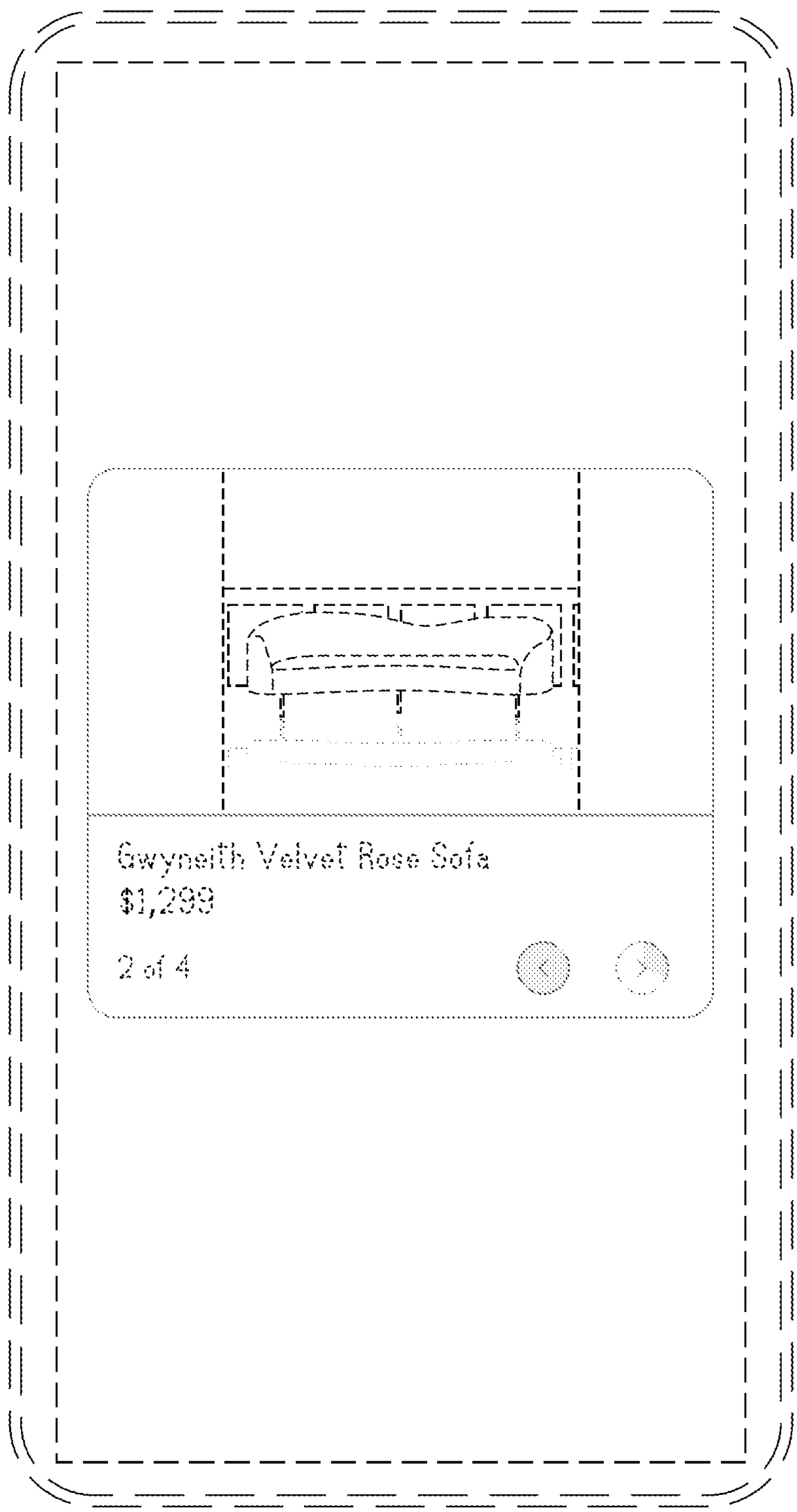

FIG. 6

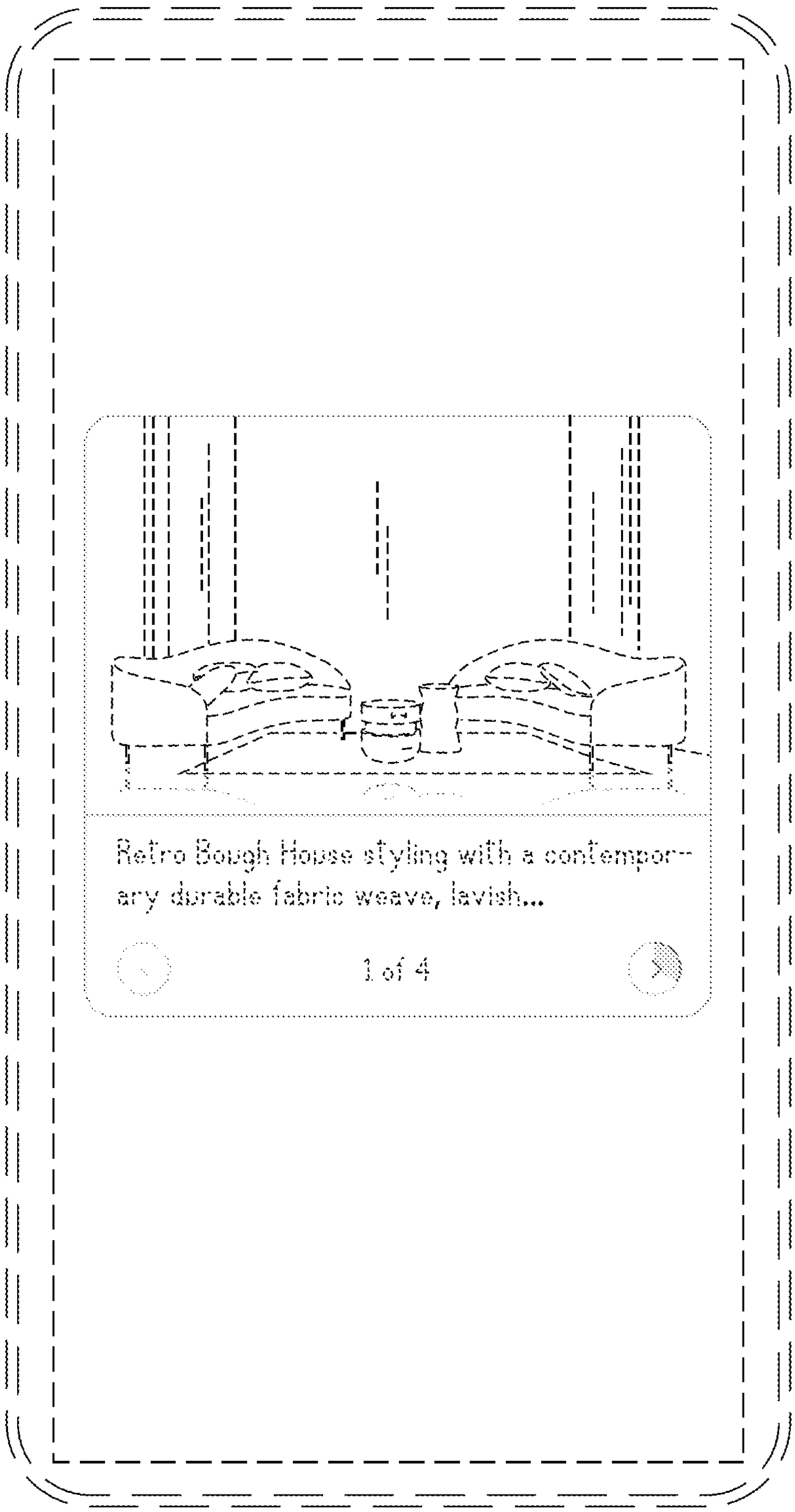
Retro Bough House styling with a contemporary durable fabric weave, lavish...
1 of 4

FIG. 7

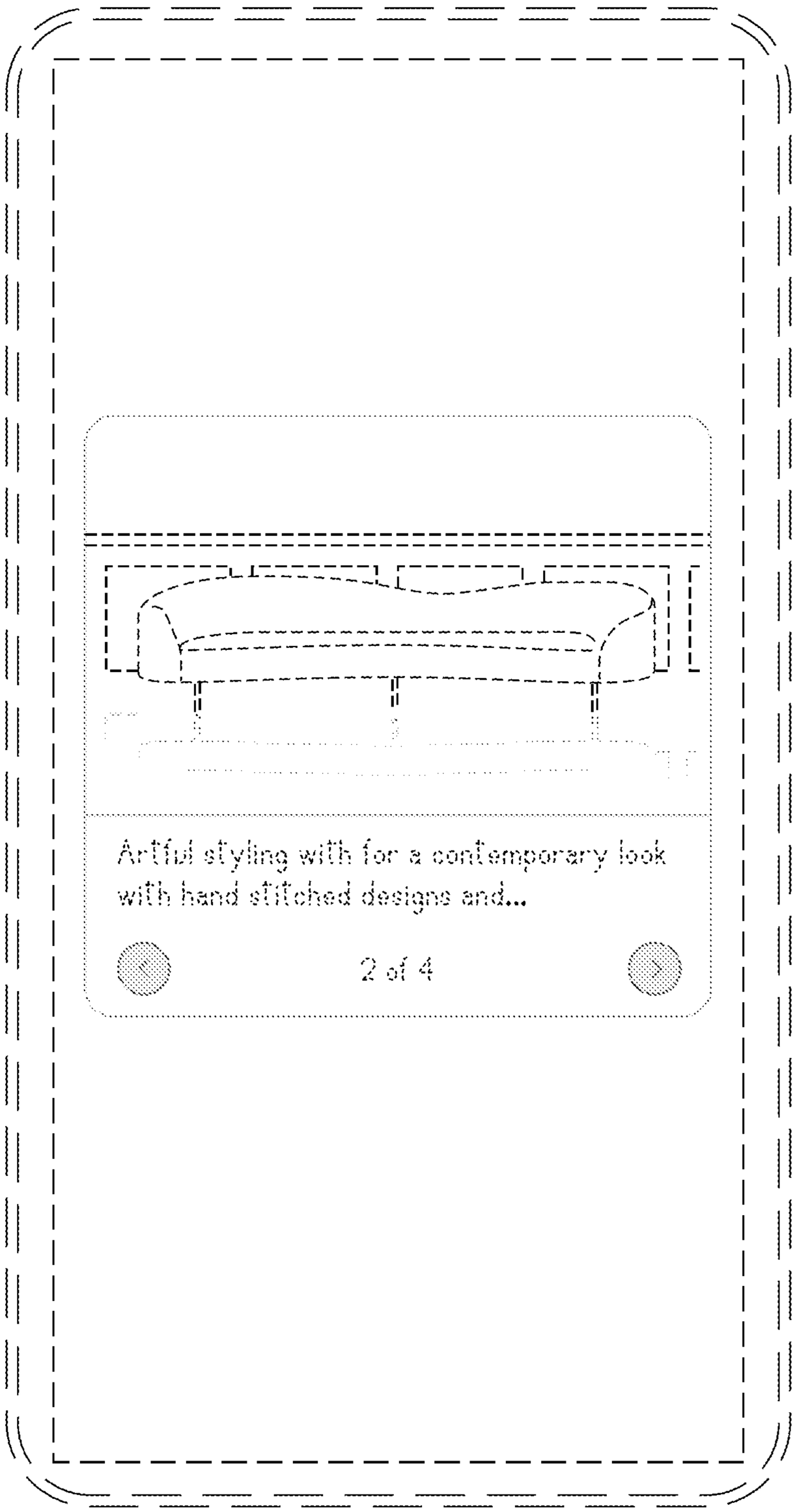
Artful styling with for a contemporary look
with hand stitched designs and...
2 of 4

FIG. 8