US00D944222S

(12) United States Design Patent

Kim et al.

(10) Patent No.: US D944,222 S
(45) Date of Patent: ** Feb. 22, 2022

(54) **TELEVISION WITH ROLLABLE DISPLAY**

(71) Applicant: **LG ELECTRONICS INC.**, Seoul (KR)

(72) Inventors: **Seonkyu Kim**, Seoul (KR); **Youngkyoung Kim**, Seoul (KR); **Yunjoo Kim**, Seoul (KR); **Cheolwoong Shin**, Seoul (KR); **Minjae Lee**, Seoul (KR); **Hyunbyung Cha**, Seoul (KR)

(73) Assignee: **LG ELECTRONICS INC.**, Seoul (KR)

(**) Term: **15 Years**

(21) Appl. No.: **29/715,747**

(22) Filed: **Dec. 4, 2019**

(30) **Foreign Application Priority Data**

Jun. 4, 2019 (KR) 30-2019-0026625

(51) **LOC (13) Cl.** **14-03**

(52) **U.S. Cl.**
USPC **D14/126**

(58) **Field of Classification Search**
USPC ..... D14/125–138, 138 AD, 138 G, 138 R, D14/204, 239, 248, 314–316, 322, 326, D14/334–336, 339, 340, 345, 341, 371, D14/373–377, 448–450; D20/42, 43; D21/324, 329, 332, 515; D6/300, 308, D6/310, 314, 320, 332, 553, 642–643, D6/650.1, 653.15, 654.15, 657, 661, 675; D16/229, 235, 241
CPC A47G 1/1686; B66D 3/18; G03B 21/58; G03B 21/56; G03B 21/60; G09F 15/0025; G09F 7/18; G09F 9/301; G09G 3/3225; G06F 1/16; G06F 1/1601; G06F 1/1637; G06F 1/1647; G06F 1/1605; G06F 1/162; G06F 1/1652; G06F 1/69; G06F 1/1615;
(Continued)

(56) **References Cited**

U.S. PATENT DOCUMENTS

D735,709 S * 8/2015 Daniel D14/341
D835,596 S * 12/2018 Cho ..... D14/138 AD
(Continued)

Primary Examiner — Ramzi Almatrahi
(74) *Attorney, Agent, or Firm* — Birch, Stewart, Kolasch & Birch, LLP

(57) **CLAIM**

We claim the ornamental design for a television with rollable display, as shown and described.

DESCRIPTION

FIG. **1** is a top, front and right side perspective view of a television with rollable display, shown in condition of use with the display lifted up;
FIG. **2** is a top, rear and right side perspective view thereof;
FIG. **3** is a front elevation view thereof;
FIG. **4** is a rear elevation view thereof;
FIG. **5** is a left side elevation view thereof;
FIG. **6** is a right side elevation view thereof;
FIG. **7** is a top plan view thereof;
FIG. **8** is a bottom plan view thereof;
FIG. **9** is a top, front and right side perspective view thereof, shown with the display in a rolled down configuration;
FIG. **10** is a front elevation view thereof;
FIG. **11** is a rear elevation view thereof;
FIG. **12** is a left side elevation view thereof;
FIG. **13** is a right side elevation view thereof;
FIG. **14** is a top plan view thereof; and,
FIG. **15** is a bottom plan view thereof.
The broken lines depict portions of the television with rollable display in which the design is embodied that form no part of the claimed design.

1 Claim, 15 Drawing Sheets

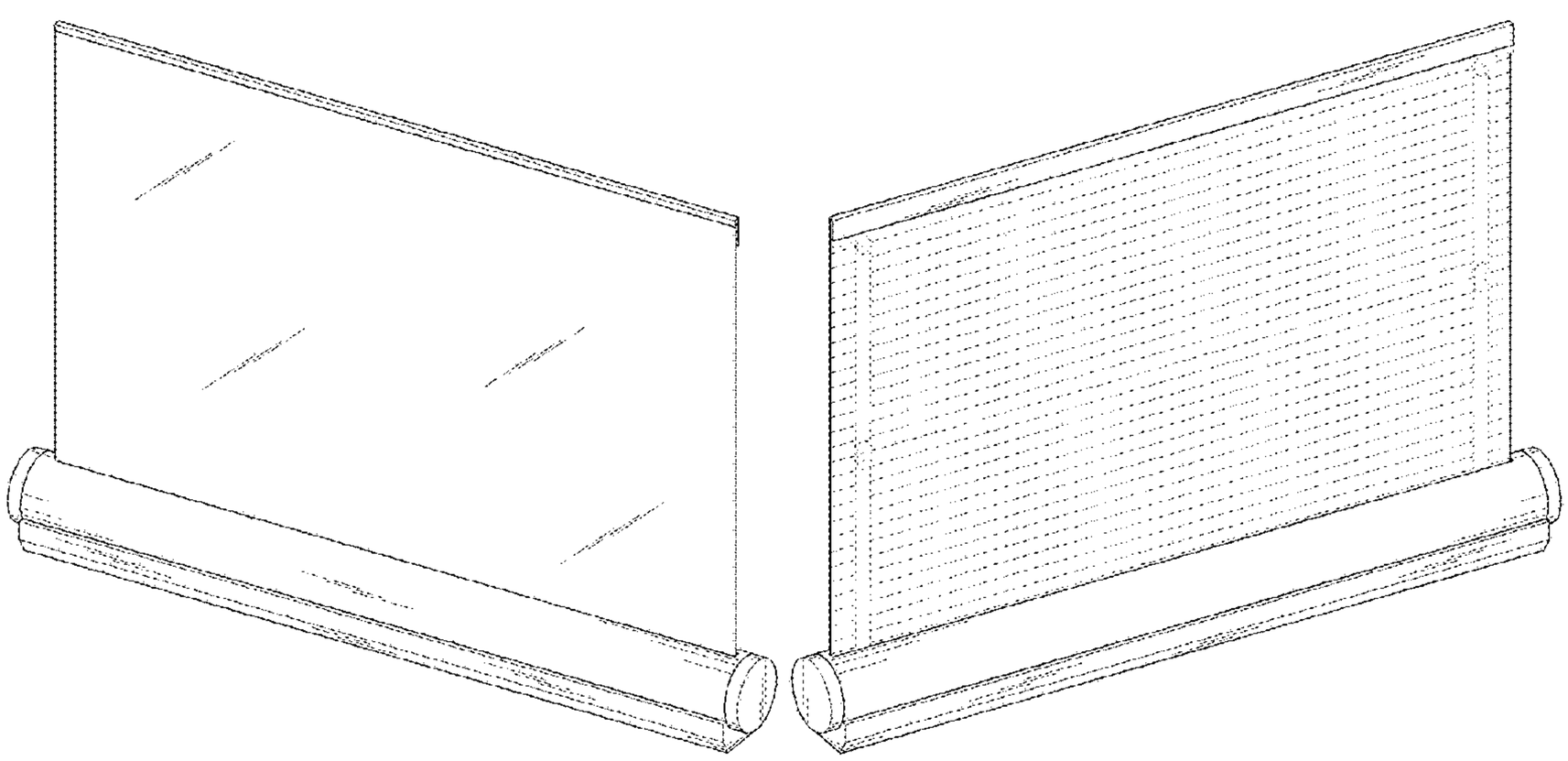

(58) **Field of Classification Search**
CPC .. H05K 5/0204; H05K 5/0017; H05K 5/0217; H04N 5/64; H04N 5/232411; H04M 1/0266; H04R 5/02; G02F 1/133308
See application file for complete search history.

(56) **References Cited**

U.S. PATENT DOCUMENTS

D847,108	S *	4/2019	Catania	D14/126
D915,317	S *	4/2021	Kim	D14/126
2006/0279840	A1*	12/2006	Yamauchi	G03B 21/56 359/461
2007/0241002	A1*	10/2007	Wu	G06F 1/1601 206/150
2008/0086925	A1*	4/2008	Yang	G09F 9/301 40/610
2008/0212271	A1*	9/2008	Misawa	G02F 1/133308 361/679.01
2015/0029229	A1*	1/2015	Voutsas	G06F 1/1647 345/661
2015/0047796	A1*	2/2015	Peng	G06F 1/1652 160/323.1
2016/0205791	A1*	7/2016	Kim	H05K 5/02 361/679.01
2017/0318688	A1*	11/2017	Kim	G06F 1/1652
2020/0035133	A1*	1/2020	Pyo	G09F 9/301

* cited by examiner

FIG. 1

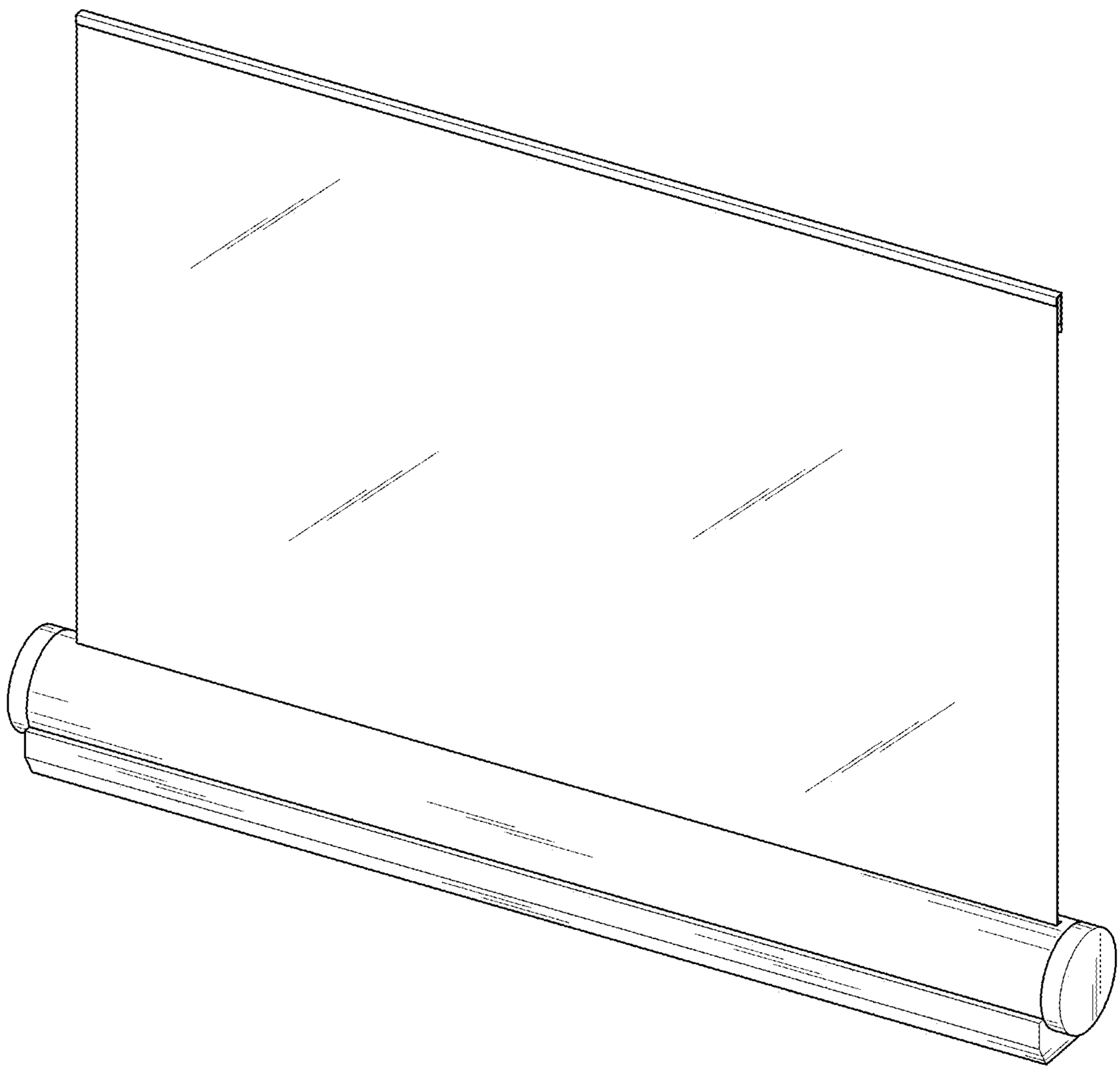

FIG. 2

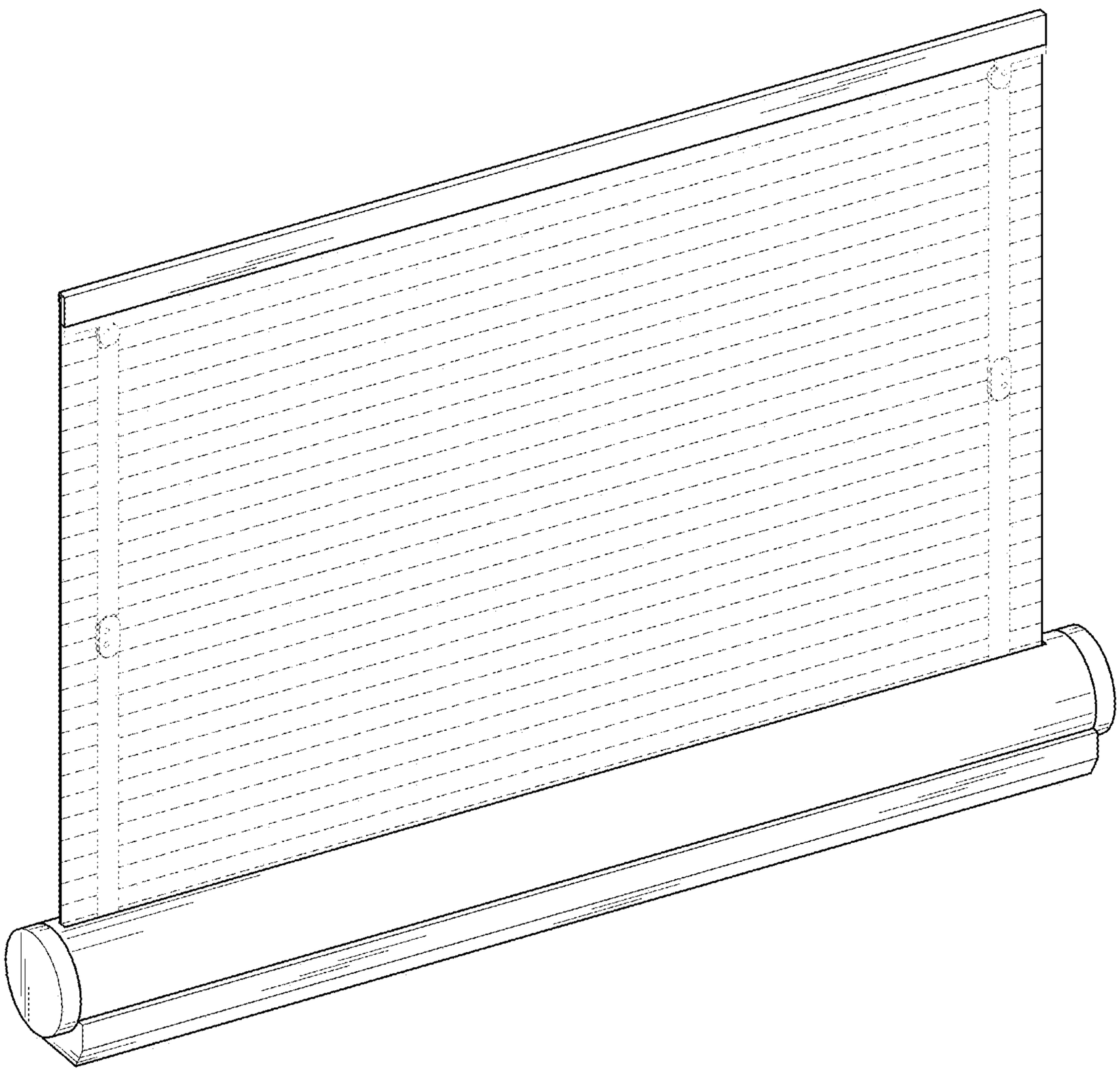

FIG. 3

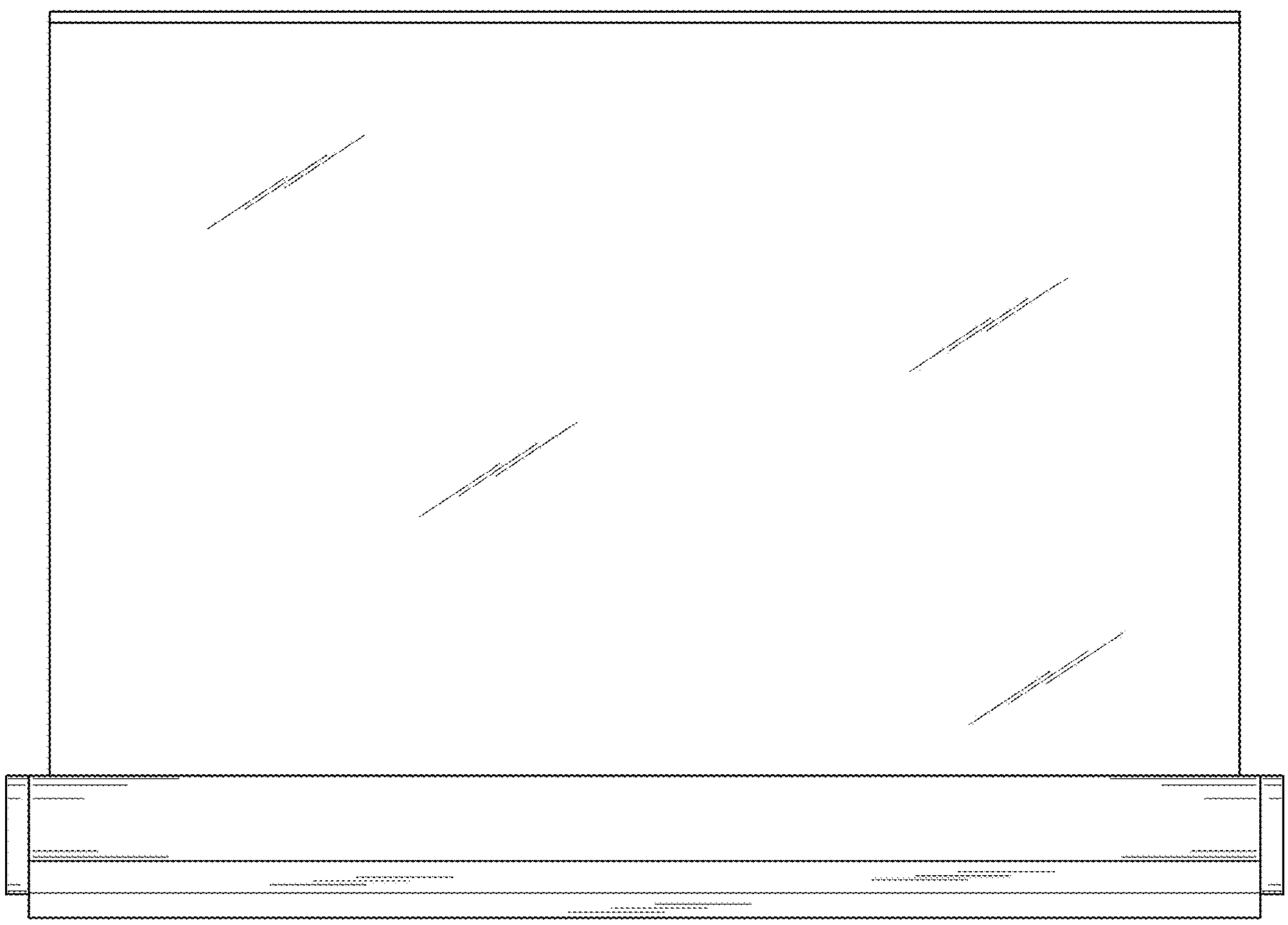

FIG. 4

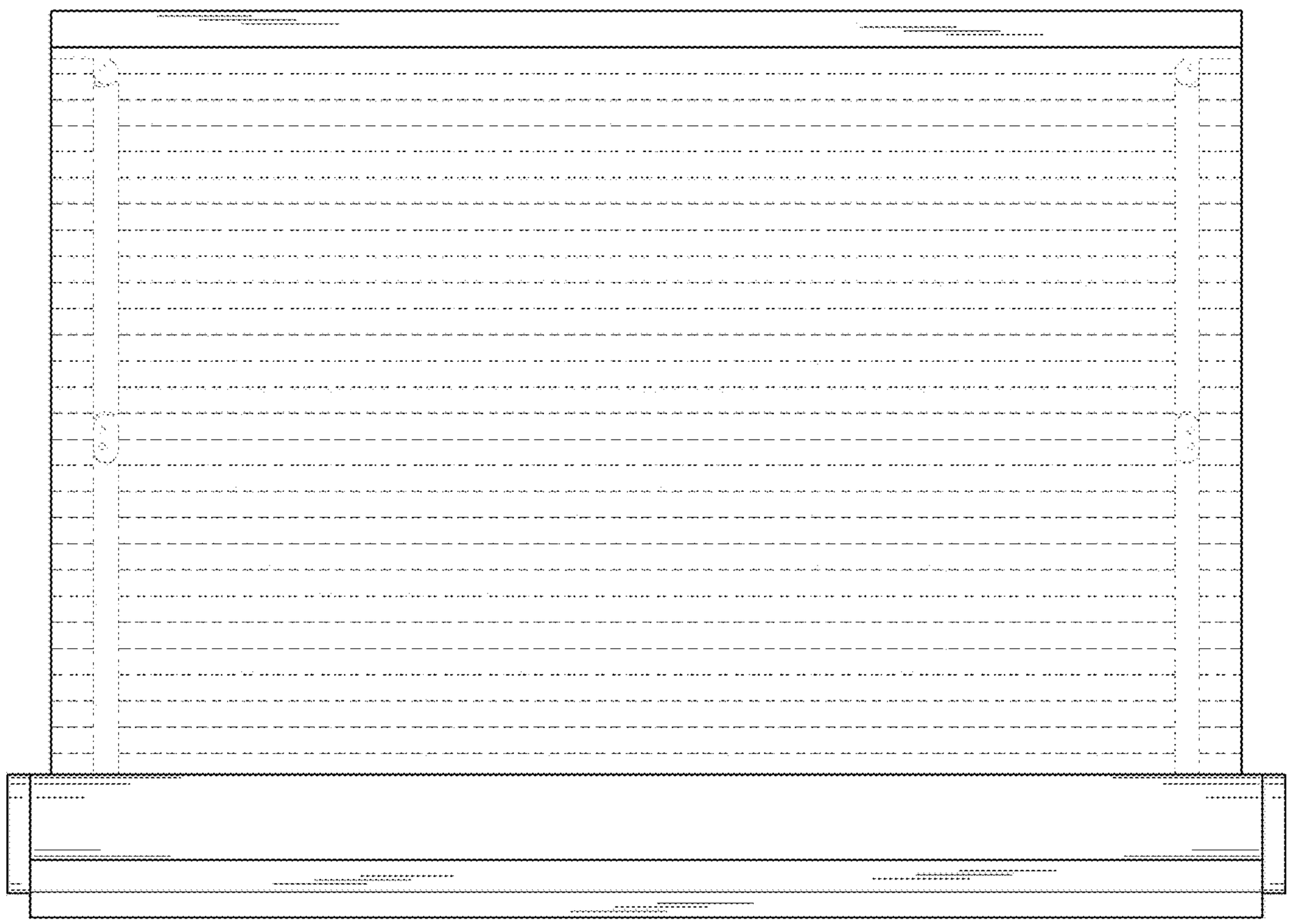

FIG. 5

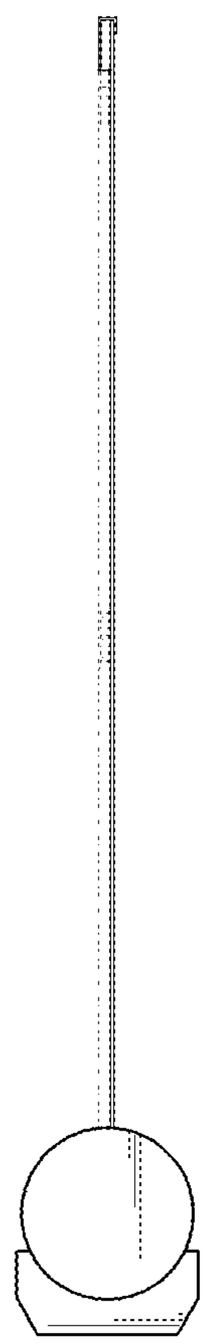

FIG. 6

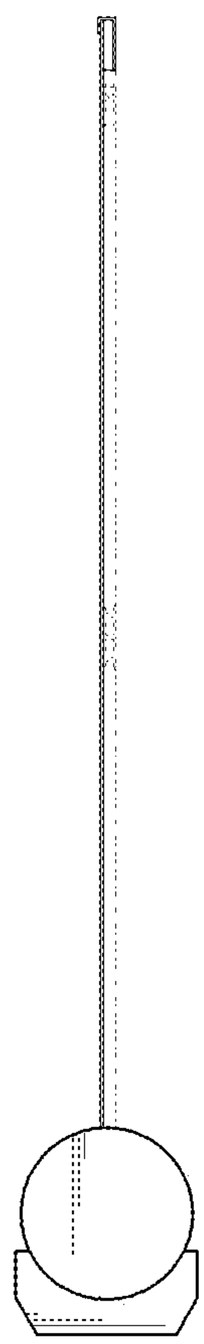

FIG. 7

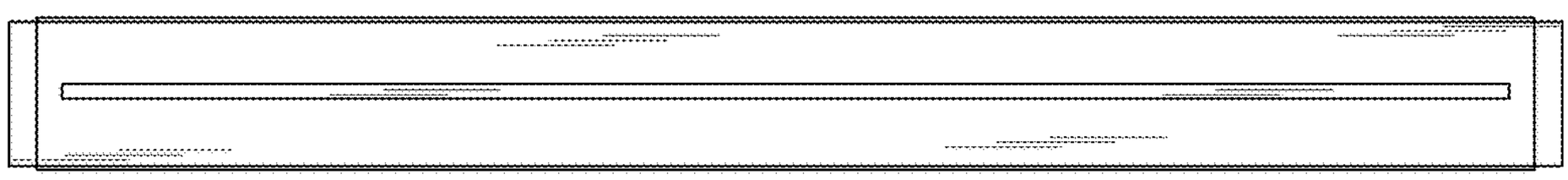

FIG. 8

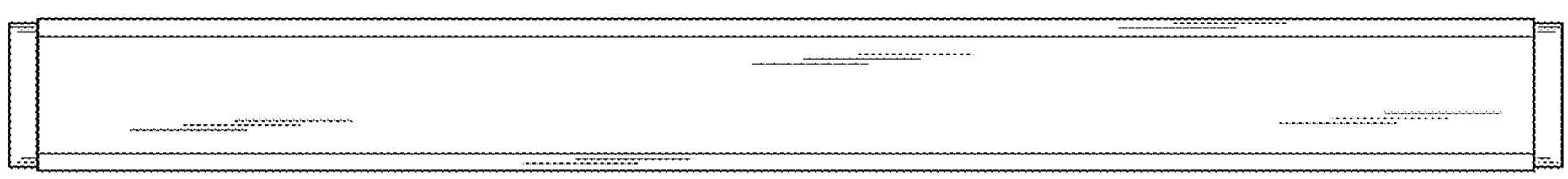

FIG. 9

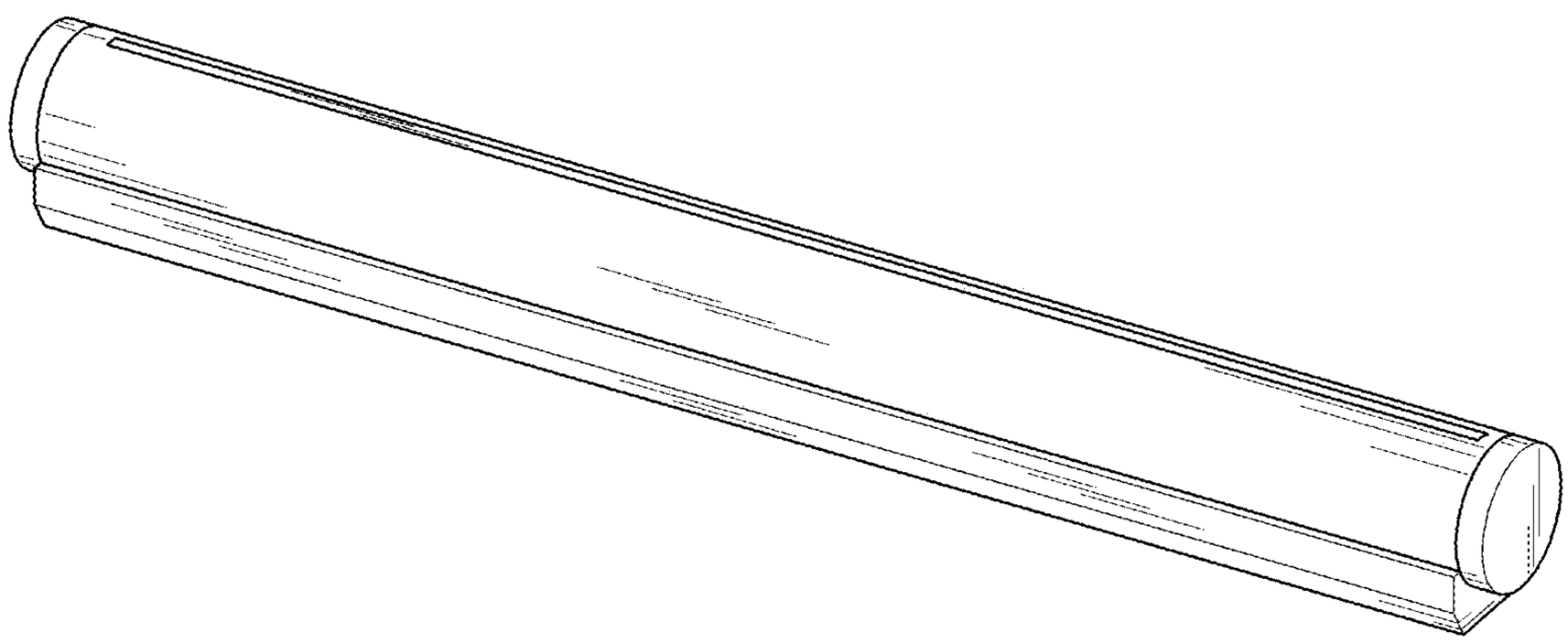

FIG. 10

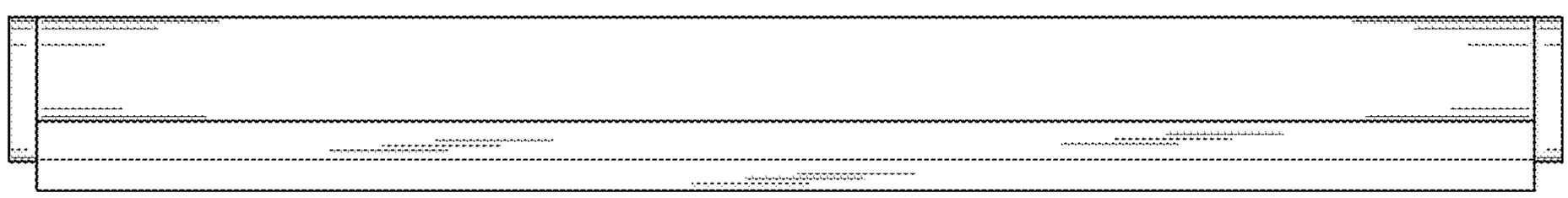

FIG. 11

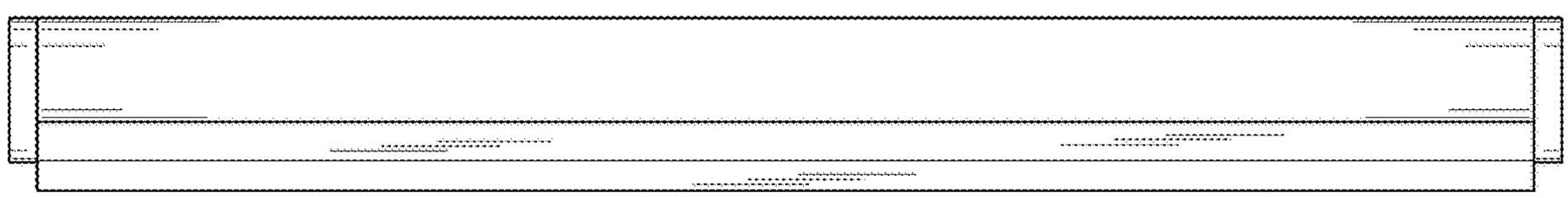

FIG. 12

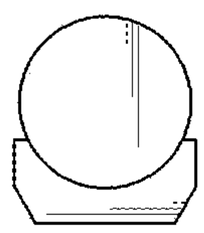

FIG. 13

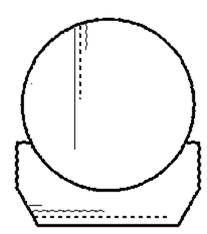

FIG. 14

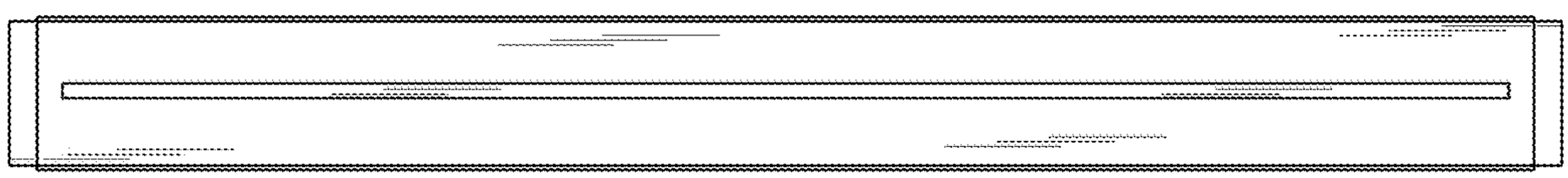
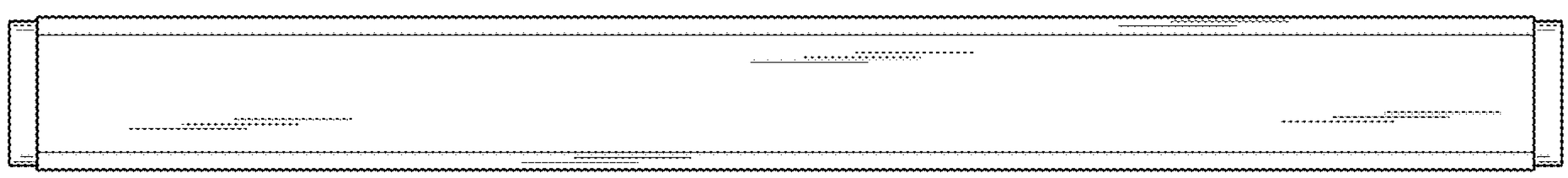
FIG. 15