US00D943566S

(12) United States Design Patent

Kim et al.

(10) Patent No.: US D943,566 S
(45) Date of Patent: ** Feb. 15, 2022

(54) **CASE FOR ELECTRONIC DEVICE**

(71) Applicant: **Samsung Electronics Co., Ltd.**, Suwon-si (KR)

(72) Inventors: **Eunsoo Kim**, Suwon-si (KR); **Junyong Song**, Suwon-si (KR); **Byoungjin Kim**, Suwon-si (KR); **Junghyun Choi**, Suwon-si (KR)

(73) Assignee: **SAMSUNG ELECTRONICS CO., LTD.**, Suwon-si (KR)

(**) Term: **15 Years**

(21) Appl. No.: **29/754,607**

(22) Filed: **Oct. 13, 2020**

(30) **Foreign Application Priority Data**

Jun. 23, 2020 (KR) 30-2020-0028279

(51) **LOC (13) Cl.** **14-03**

(52) **U.S. Cl.**
USPC **D14/250**

(58) **Field of Classification Search**
USPC D14/203.3–203.7, 439, 251–253, 447, D14/217, 240, 238.1, 440, 248; D13/103, D13/107–108, 119; D3/201, 218, 247, D3/249, 269, 273, 301, 303
CPC . H04B 1/3888; A45C 13/02; A45C 2011/002; A45C 1/06; A45C 11/00; A45F 2200/0525; A45F 2005/026; A45F 2200/0516; H04M 1/0283; H04M 1/0202
See application file for complete search history.

(56) **References Cited**

U.S. PATENT DOCUMENTS

D679,271 S * 4/2013 Liu D14/250
D776,123 S * 1/2017 Akana D14/440
D809,497 S * 2/2018 Kim D14/250
D860,984 S * 9/2019 Stagge D14/250
D877,136 S * 3/2020 Lee D14/250
D879,084 S * 3/2020 Lee D14/250
D879,764 S * 3/2020 Lee D14/250
D896,214 S * 9/2020 Lee D14/250
D898,016 S * 10/2020 Liang D14/250
D899,412 S * 10/2020 Lee D14/250
D905,675 S * 12/2020 Lee D14/250
D910,004 S * 2/2021 Lee D14/250
D915,385 S * 4/2021 Lee D14/250
(Continued)

Primary Examiner — Carla J Wright
(74) *Attorney, Agent, or Firm* — McAndrews Held & Malloy, Ltd.

(57) **CLAIM**

The ornamental design for a case for electronic device, as shown and described.

DESCRIPTION

FIG. **1** is a front, right-side, and top perspective view of a case for electronic device showing our new design with the support stand in a stowed position;
FIG. **2** is a front elevation view thereof;
FIG. **3** is a rear elevation view thereof;
FIG. **4** is a left side elevation view thereof;
FIG. **5** is a right side elevation view thereof;
FIG. **6** is a top plan view thereof;
FIG. **7** is a bottom plan view thereof;
FIG. **8** is a rear, left-side, and bottom perspective view thereof;
FIG. **9** is a front, right-side, and top perspective view thereof, showing the support stand in an extended position; and,
FIG. **10** is a front, right-side, and top perspective view thereof, showing the case for electronic device in a rotated position and the support stand in an extended position.
The broken lines in the figures illustrate portions of the case for electronic device that form no part of the claimed design.

1 Claim, 8 Drawing Sheets

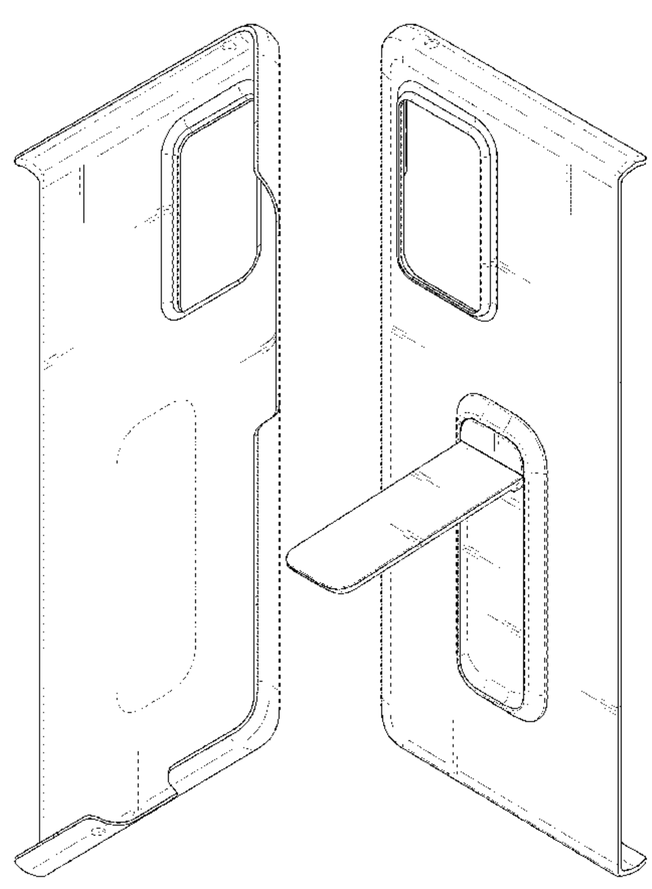

(56) **References Cited**

U.S. PATENT DOCUMENTS

D915,386	S	*	4/2021	Zhou	D14/250
D917,446	S	*	4/2021	Ham	D14/250
D918,213	S	*	5/2021	Miyatake	D14/440
D928,135	S	*	8/2021	Kim	D14/250
D928,136	S	*	8/2021	Kim	D14/250
D928,137	S	*	8/2021	Kim	D14/250
D931,846	S	*	9/2021	Lee	D14/250
D932,482	S	*	10/2021	Del Toro	D14/253
2013/0127308	A1	*	5/2013	Yang	A45C 11/00 312/223.1
2020/0229566	A1	*	7/2020	Mody	A45C 13/005
2020/0281337	A1	*	9/2020	Lee	A45C 7/00
2021/0059370	A1	*	3/2021	Del Toro	F16M 13/005

* cited by examiner

FIG. 1

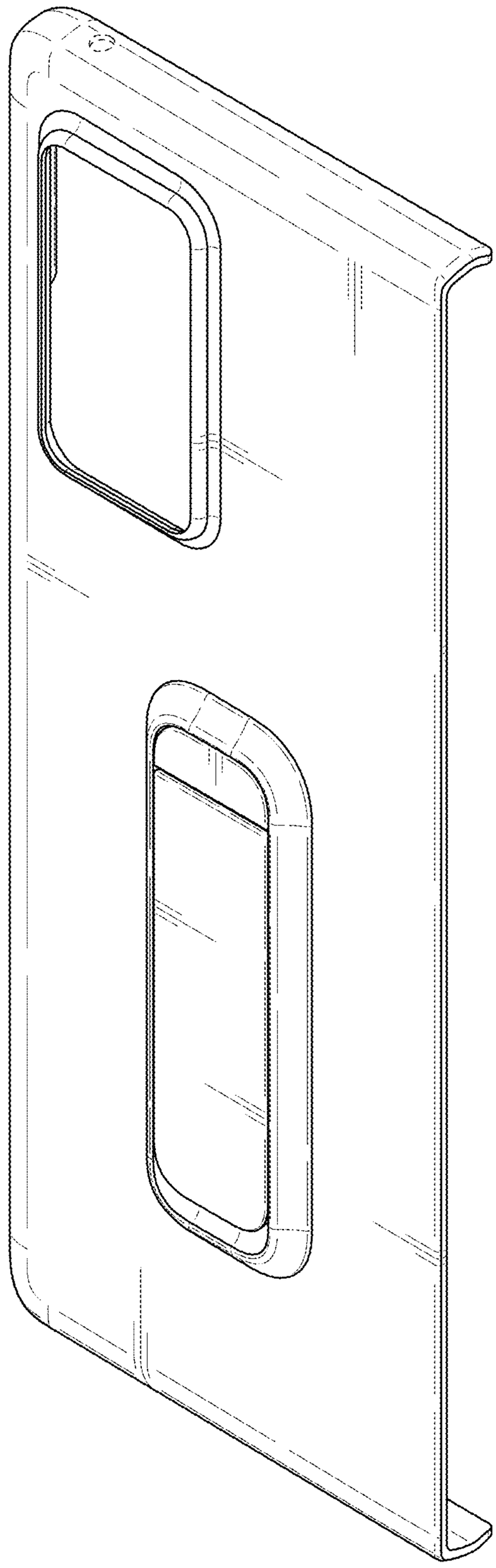

FIG. 2

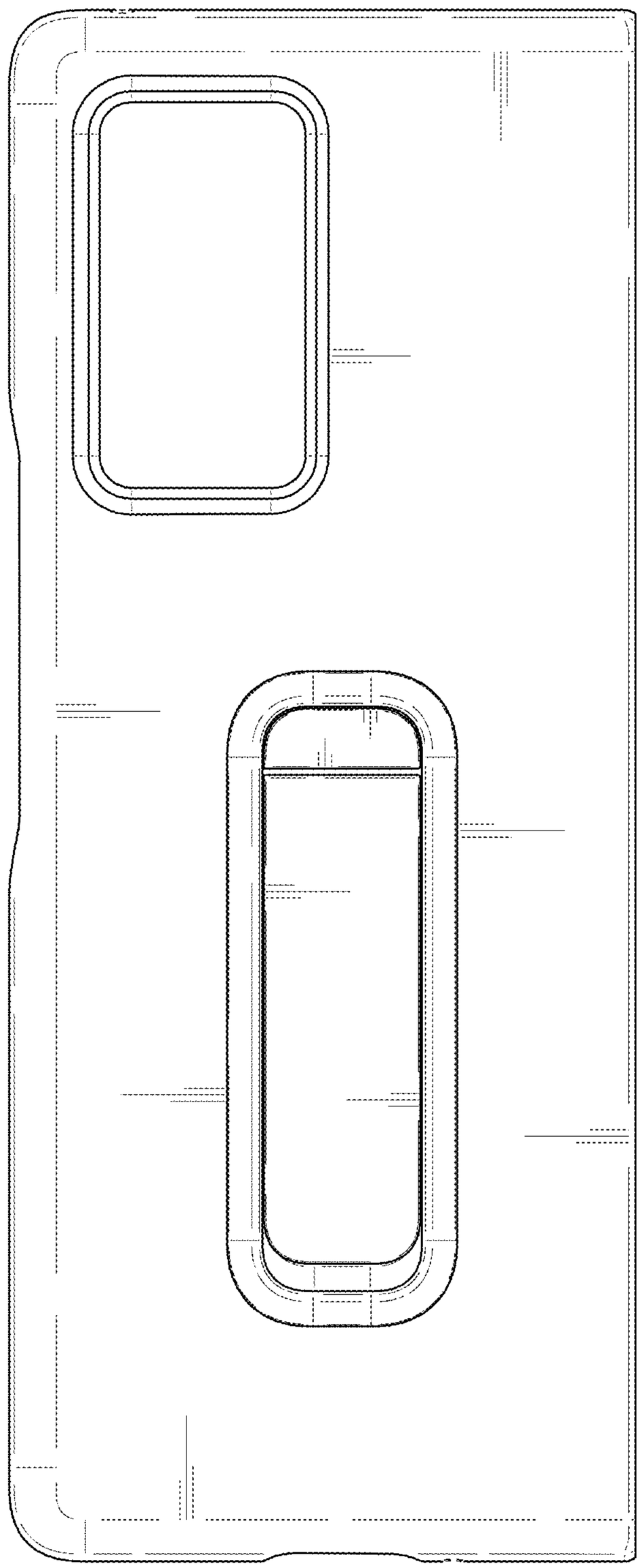

FIG. 3

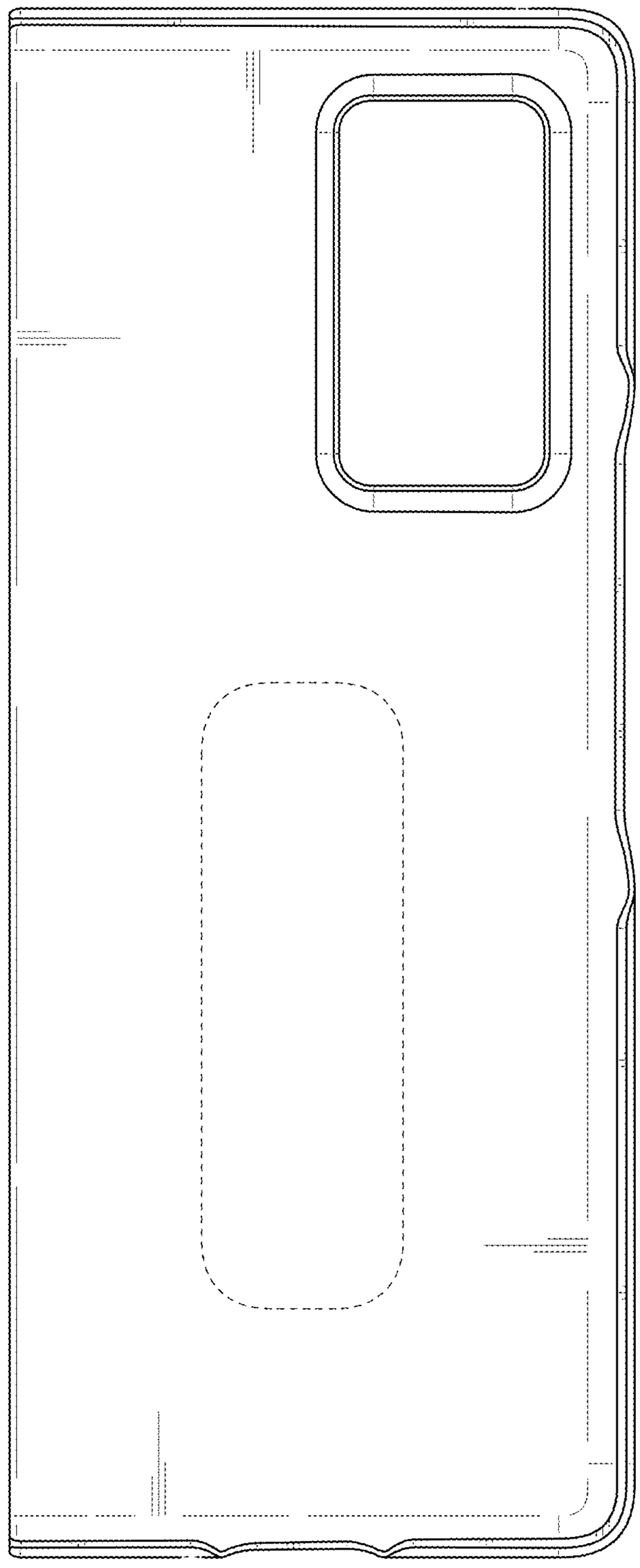

FIG. 4

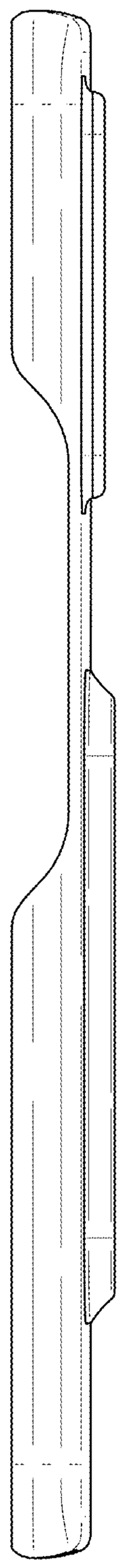

FIG. 5

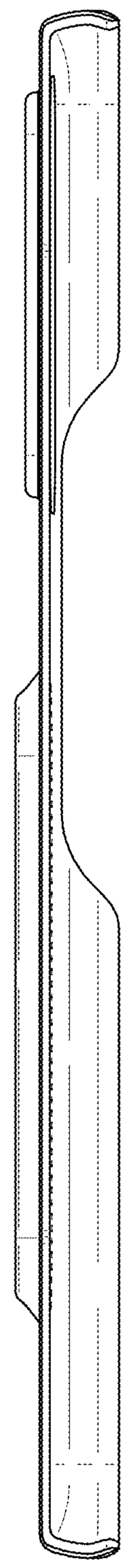

FIG. 6

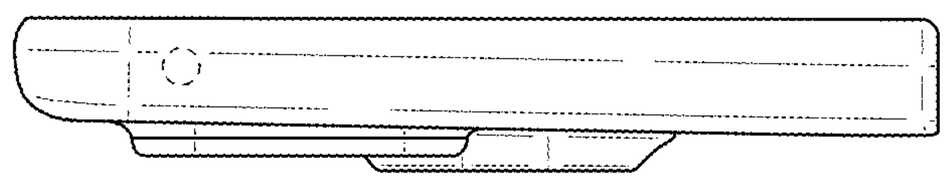

FIG. 7

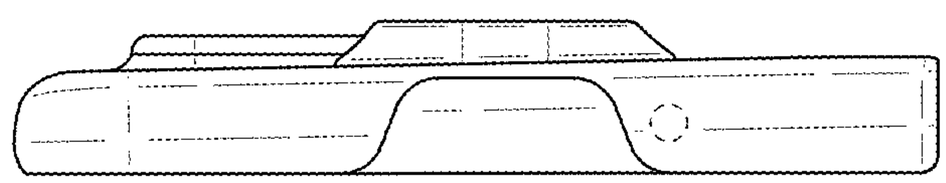

FIG. 8

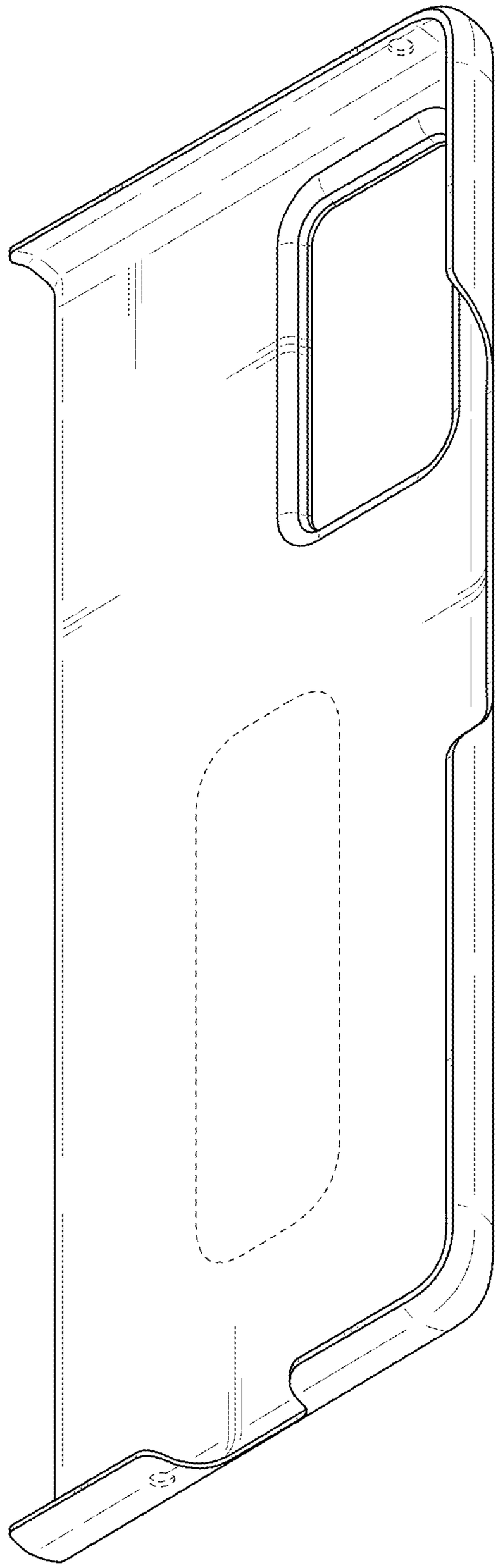

FIG. 9

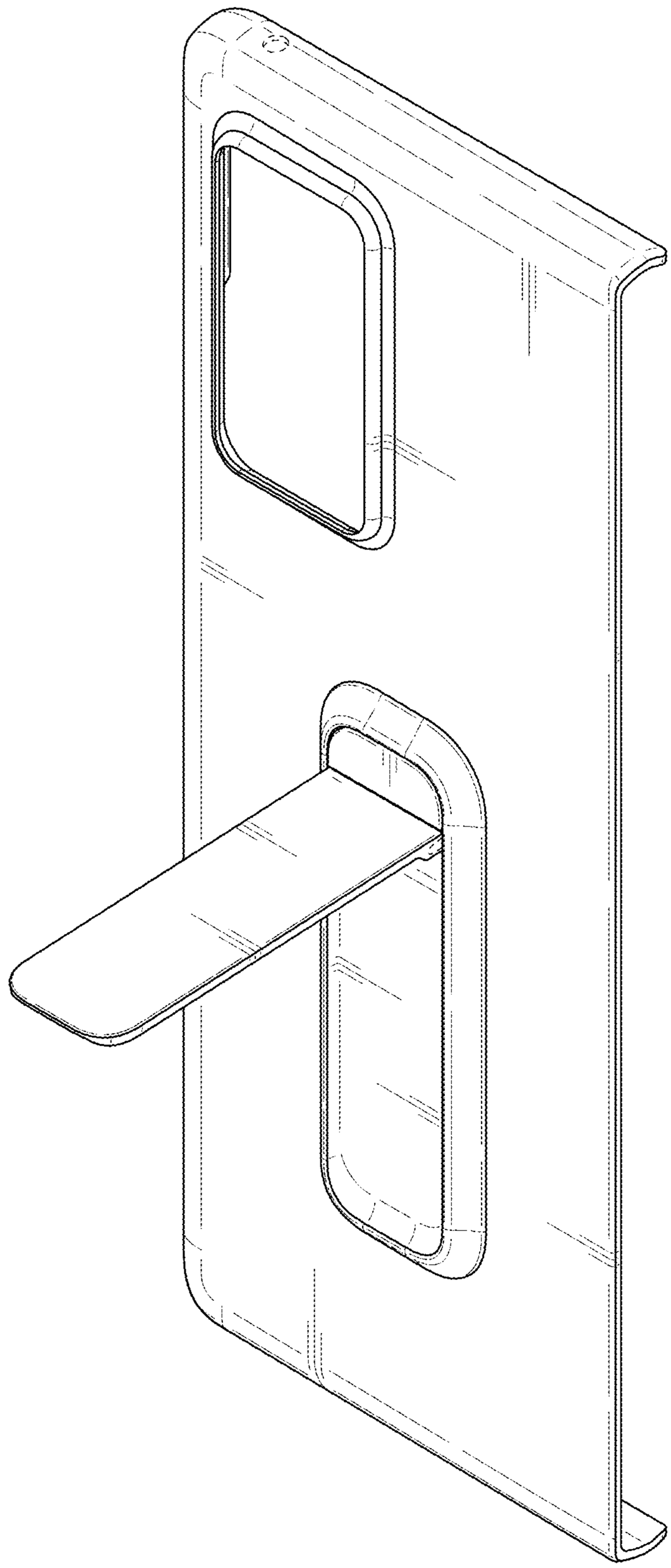
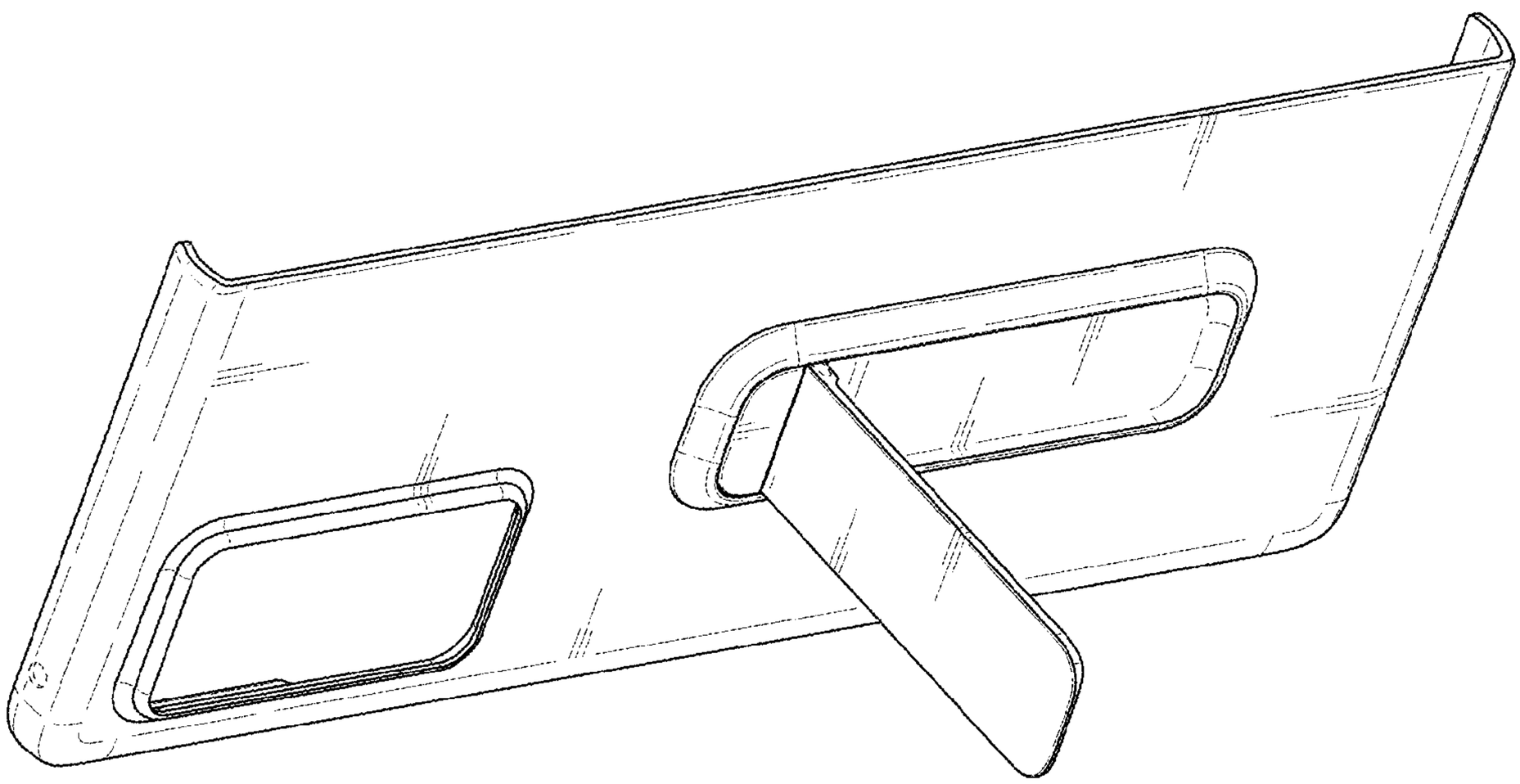
FIG. 10