US00D943433S

(12) United States Design Patent

Parrish et al.

(10) Patent No.: US D943,433 S
(45) Date of Patent: ** Feb. 15, 2022

(54) **DUAL MEASURING LEVEL**

(71) Applicants: **Mark Parrish**, Savannah, GA (US); **Veronica Parrish**, Savannah, GA (US)

(72) Inventors: **Mark Parrish**, Savannah, GA (US); **Veronica Parrish**, Savannah, GA (US)

(**) Term: **15 Years**

(21) Appl. No.: **29/723,652**

(22) Filed: **Feb. 10, 2020**

(51) **LOC (13) Cl.** **10-04**

(52) **U.S. Cl.**
USPC **D10/69**

(58) **Field of Classification Search**
USPC D10/69, 74; D19/133, 156
CPC G01C 5/00; G01C 15/02; G06N 20/00; G01B 3/566; B43L 7/02; B43L 7/027
See application file for complete search history.

(56) **References Cited**

U.S. PATENT DOCUMENTS

2,770,889	A *	11/1956	Allegretti	G01C 9/26	33/385
5,459,935	A *	10/1995	Paulson	G01B 3/566	33/451
6,282,805	B1 *	9/2001	Cosentino	G01C 9/28	33/374
6,293,023	B1 *	9/2001	Schooley	G01C 9/28	33/374
D460,700	S *	7/2002	Marletta	D10/69	
D493,737	S *	8/2004	Nickel	D10/74	
D544,382	S *	6/2007	Bowers	D10/69	
7,562,463	B2 *	7/2009	Vaes	B25H 7/00	33/374
D657,274	S *	4/2012	Neethling	D10/69	
D751,429	S *	3/2016	Johnson	D10/69	
D866,365	S *	11/2019	Graykowski	D10/69	
11,085,763	B2 *	8/2021	Tang	G01C 9/26	
2002/0121025	A1 *	9/2002	Leite	G01C 9/28	33/374
2004/0172840	A1 *	9/2004	Odachowski	B43L 7/12	33/465
2012/0266471	A1 *	10/2012	Chao	B43L 7/027	33/478
2013/0326895	A1 *	12/2013	Bureau	G01C 9/26	33/381

* cited by examiner

Primary Examiner — L. A. Grabenstetter
Assistant Examiner — Antoinette Martine Suiter
(74) *Attorney, Agent, or Firm* — Sanchelima & Associates, P.A.; Christian Sanchelima; Jesus Sanchelima

(57) **CLAIM**

The ornamental design for a dual measuring level, as shown and described.

DESCRIPTION

FIG. **1** is an isometric view of a dual measuring level showing our new design, in an open configuration;
FIG. **2** is an isometric view thereof, in a closed configuration;
FIG. **3** is a front elevational view thereof, in an open configuration;
FIG. **4** is a rear elevational view thereof;
FIG. **5** is a left side elevational view thereof;
FIG. **6** is a right elevational view thereof;
FIG. **7** is a top plan view thereof; and,
FIG. **8** is a bottom plan view thereof.
The broken lines represent portions of the dual measuring level that forms no part of the claimed design.

1 Claim, 8 Drawing Sheets

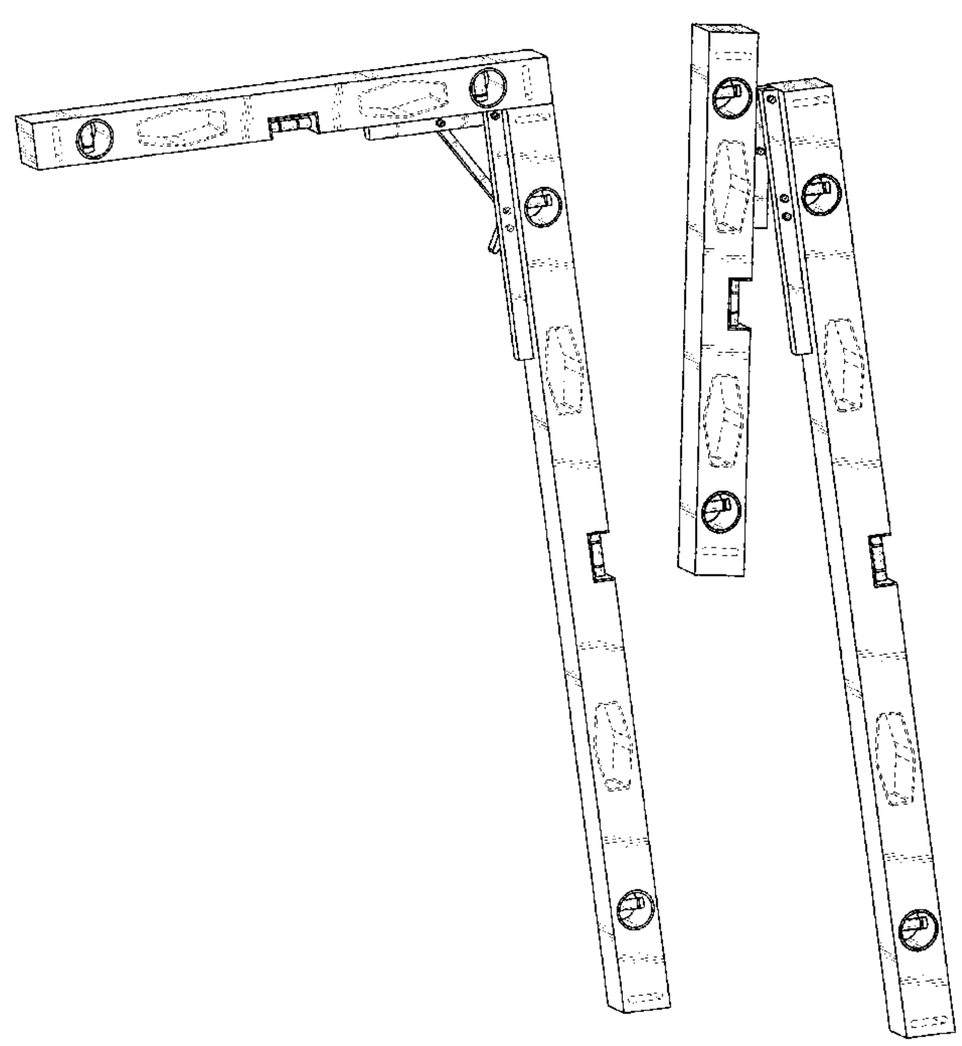

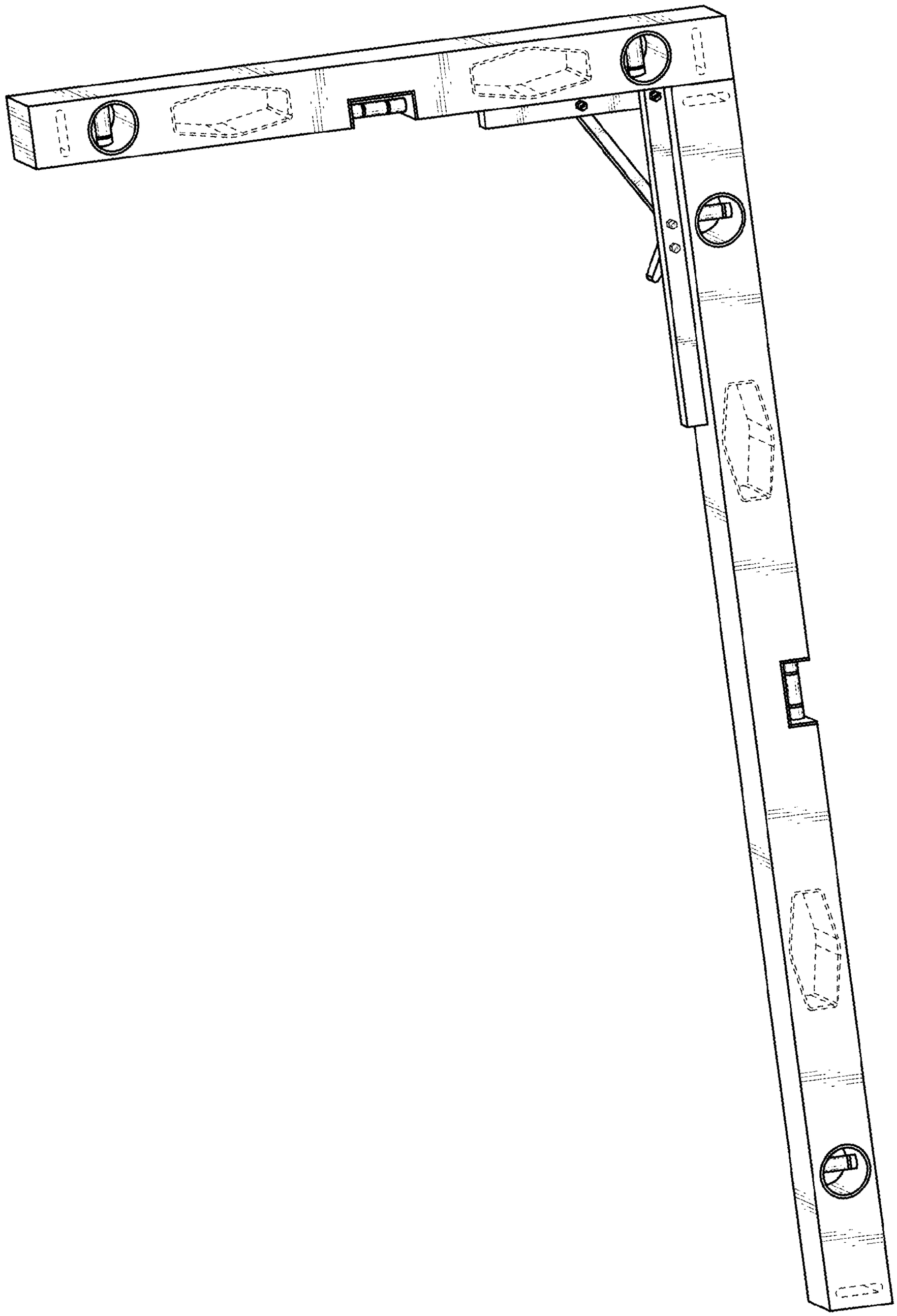

FIG. 1

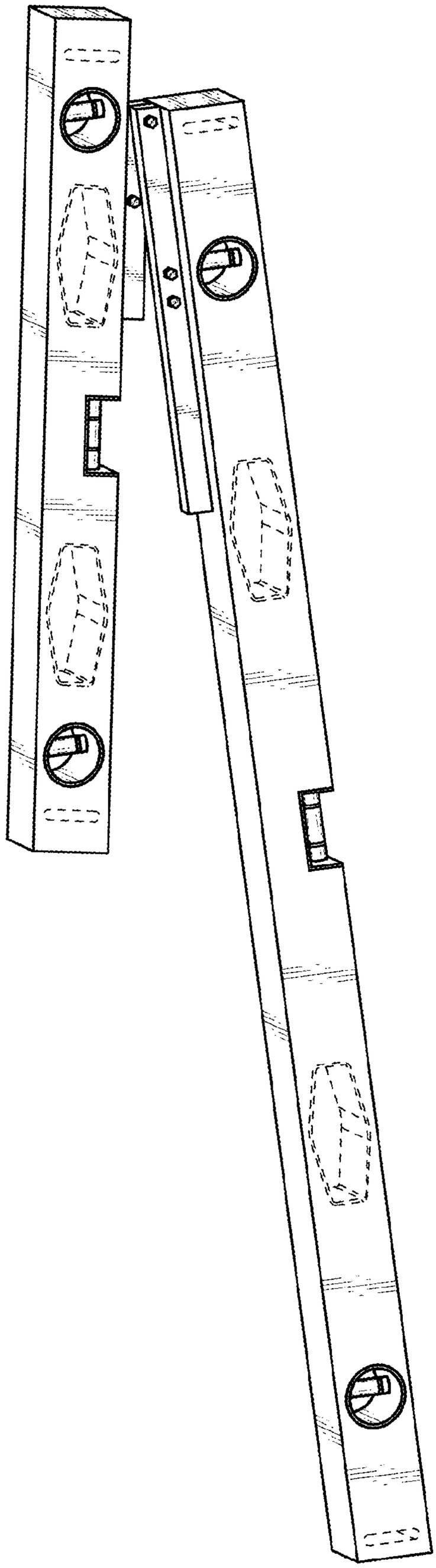

FIG. 2

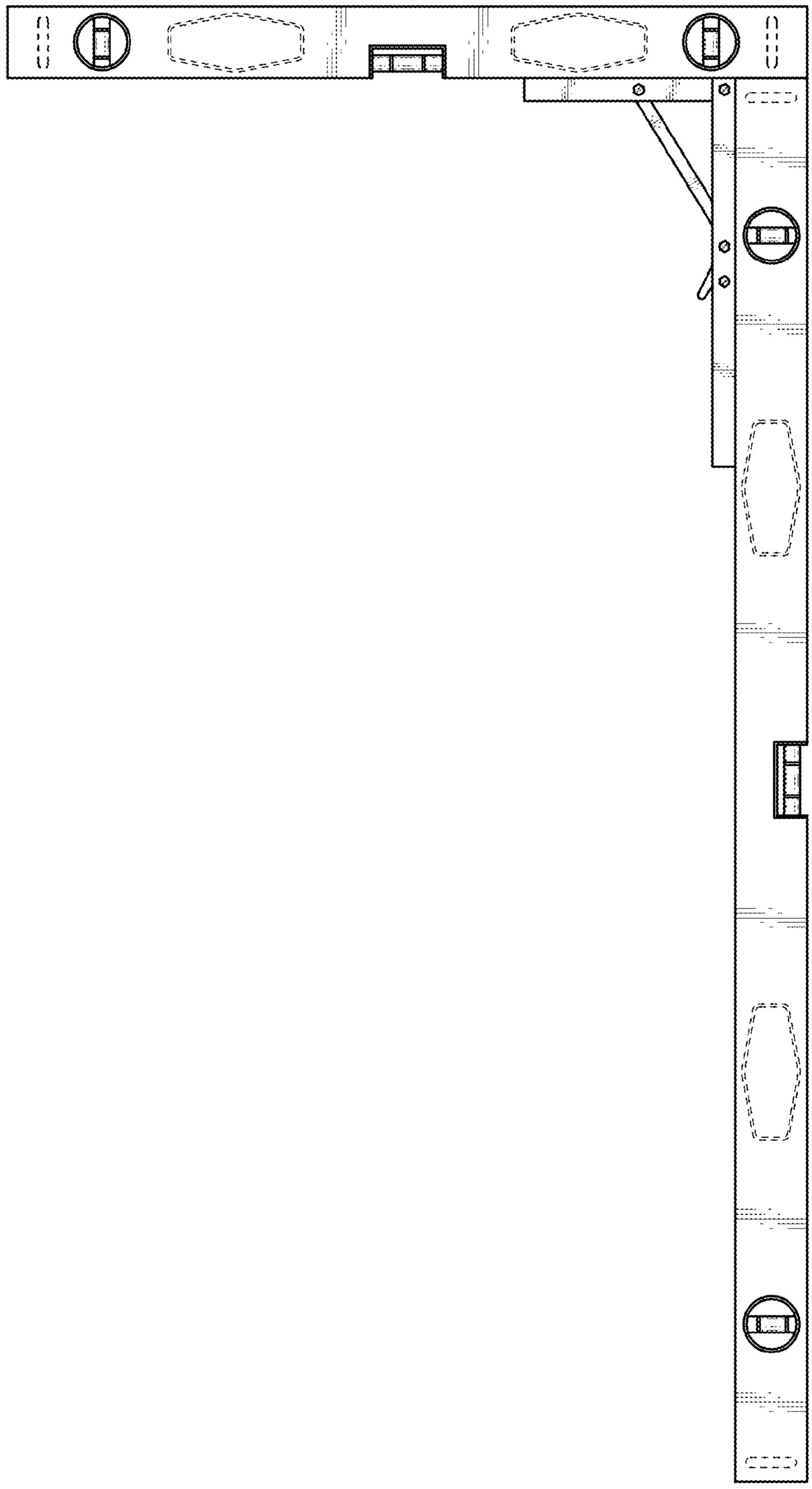

FIG. 3

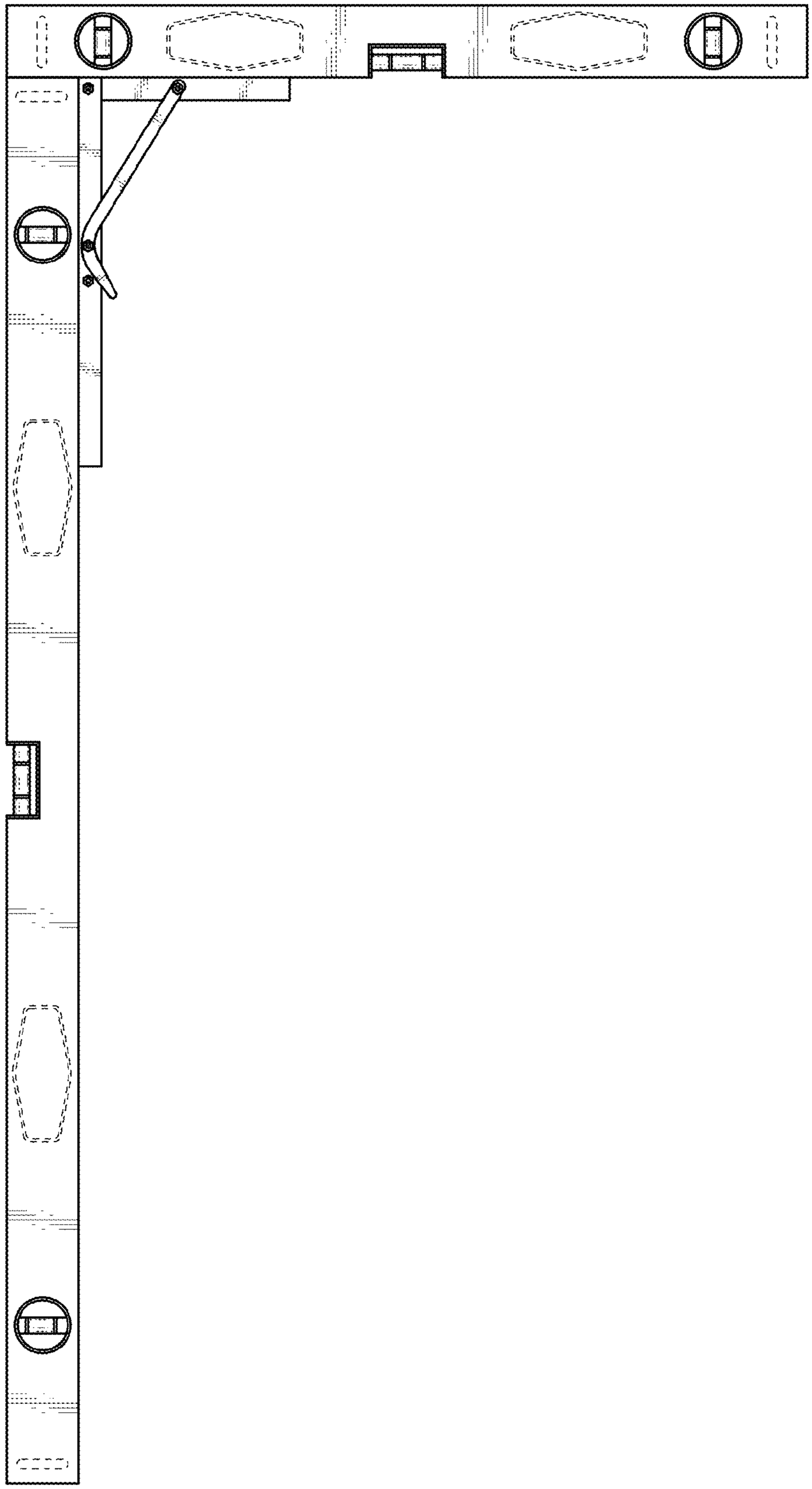

FIG. 4

FIG. 5

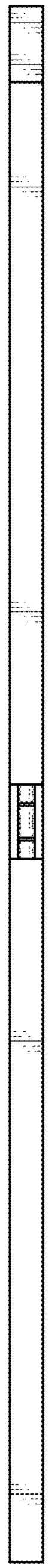

FIG. 6

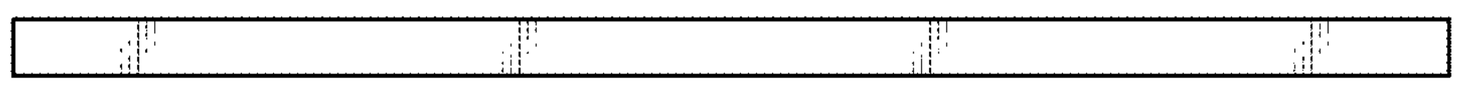

FIG. 7

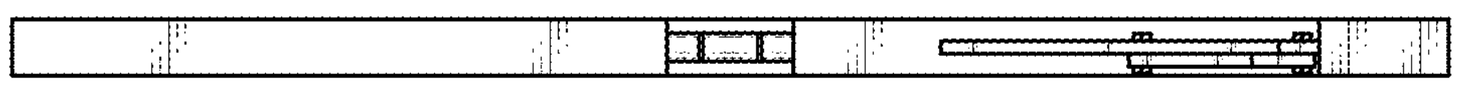

FIG. 8