US00D943113S

(12) United States Design Patent

Flaumenbaum

(10) Patent No.: US D943,113 S
(45) Date of Patent: ** Feb. 8, 2022

(54) **SHED**

(71) Applicant: **Leisure Season Ltd.**, Vaughan (CA)

(72) Inventor: **Stuart Flaumenbaum**, Vaughan (CA)

(73) Assignee: **Leisure Season Ltd.**, Vaughan (CA)

(**) Term: **15 Years**

(21) Appl. No.: **29/705,124**

(22) Filed: **Sep. 10, 2019**

(51) **LOC (13) Cl.** **25-03**

(52) **U.S. Cl.**
USPC **D25/33**; D34/11

(58) **Field of Classification Search**
USPC D34/10, 11, 27; D25/33; D6/446, 167, D6/663
CPC E04B 1/34321; E04B 7/166; E04B 1/346; E04H 1/1205; A47B 17/04; A47B 47/03; A47B 67/02; A61G 7/1011; A61G 7/1017; A61G 7/1046; A61G 7/1021; A61G 5/1059; A61G 5/0858; B65F 1/16; B65F 1/1607; B65F 1/1615; B65F 1/004
See application file for complete search history.

(56) **References Cited**

U.S. PATENT DOCUMENTS

5,029,724 A * 7/1991 Serio B65D 55/14 220/322
5,044,644 A * 9/1991 Duran B65F 1/085 280/47.35
D329,516 S * 9/1992 Bailly D34/11
5,392,942 A * 2/1995 Hanson B65F 1/00 220/23.4
5,683,126 A * 11/1997 De Vivo B65F 1/1615 220/315
D688,806 S * 8/2013 Phillips D25/33
D689,622 S * 9/2013 Thuma D25/33
D728,824 S * 5/2015 McKimmy D25/33
D777,395 S * 1/2017 Rew D34/10
D799,775 S * 10/2017 Bowen D34/7
D932,650 S * 10/2021 Leng D25/33
2005/0005785 A1* 1/2005 Poss B65F 1/1426 100/240
2007/0125778 A1* 6/2007 Uffner B65F 1/1468 220/4.28

(Continued)

FOREIGN PATENT DOCUMENTS

JP 2005162366 A * 6/2005

OTHER PUBLICATIONS

Leisure season ltd. search Nov. 26, 2021, Large Horizontal Refuse storage shed, https://leisureseason.com/test/outdoor-storage/trash-storage/largehorizontalrefusestorageshed-204-detail (Year: 2021).*

Primary Examiner — Cynthia Ramirez
(74) *Attorney, Agent, or Firm* — Michael Stanley Tomsa; McAndrews, Held & Malloy, Ltd.

(57) **CLAIM**

The ornamental design for a shed, as shown and described.

DESCRIPTION

FIG. **1** is a front perspective view of a shed showing our new design in a closed position;
FIG. **2** is a front elevation view thereof;
FIG. **3** is a rear elevation view thereof;
FIG. **4** is a right side elevation view thereof;
FIG. **5** is a left side elevation view thereof;
FIG. **6** is a top plan view thereof;
FIG. **7** is a bottom plan view thereof;
FIG. **8** is a front elevation view thereof in a first open position; and,
FIG. **9** is a front elevation view thereof in a second open position.
The broken lines in the drawings illustrate portions of the shed that form no part of the claimed design.

1 Claim, 9 Drawing Sheets

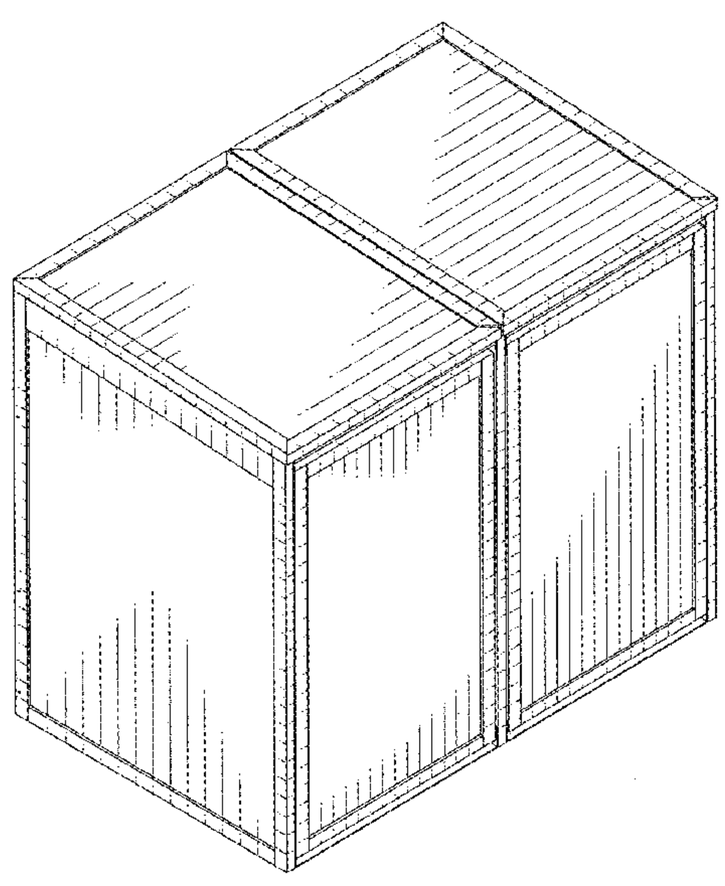

(56) **References Cited**

U.S. PATENT DOCUMENTS

2010/0043309	A1*	2/2010	Martin	E03C 1/01 52/79.5
2013/0000218	A1*	1/2013	Uffner	E04B 1/34321 52/79.1
2014/0158702	A1*	6/2014	Phillips	A47B 47/042 220/832
2017/0190509	A1*	7/2017	Reeb	E05B 83/02
2018/0056336	A1*	3/2018	Castelli	B65F 1/004
2020/0263473	A1*	8/2020	Leng	A45C 5/00
2020/0263474	A1*	8/2020	Leng	A47B 67/00
2021/0123230	A1*	4/2021	Good	E04H 1/1205
2021/0245952	A1*	8/2021	Tassinari	A47D 13/00

* cited by examiner

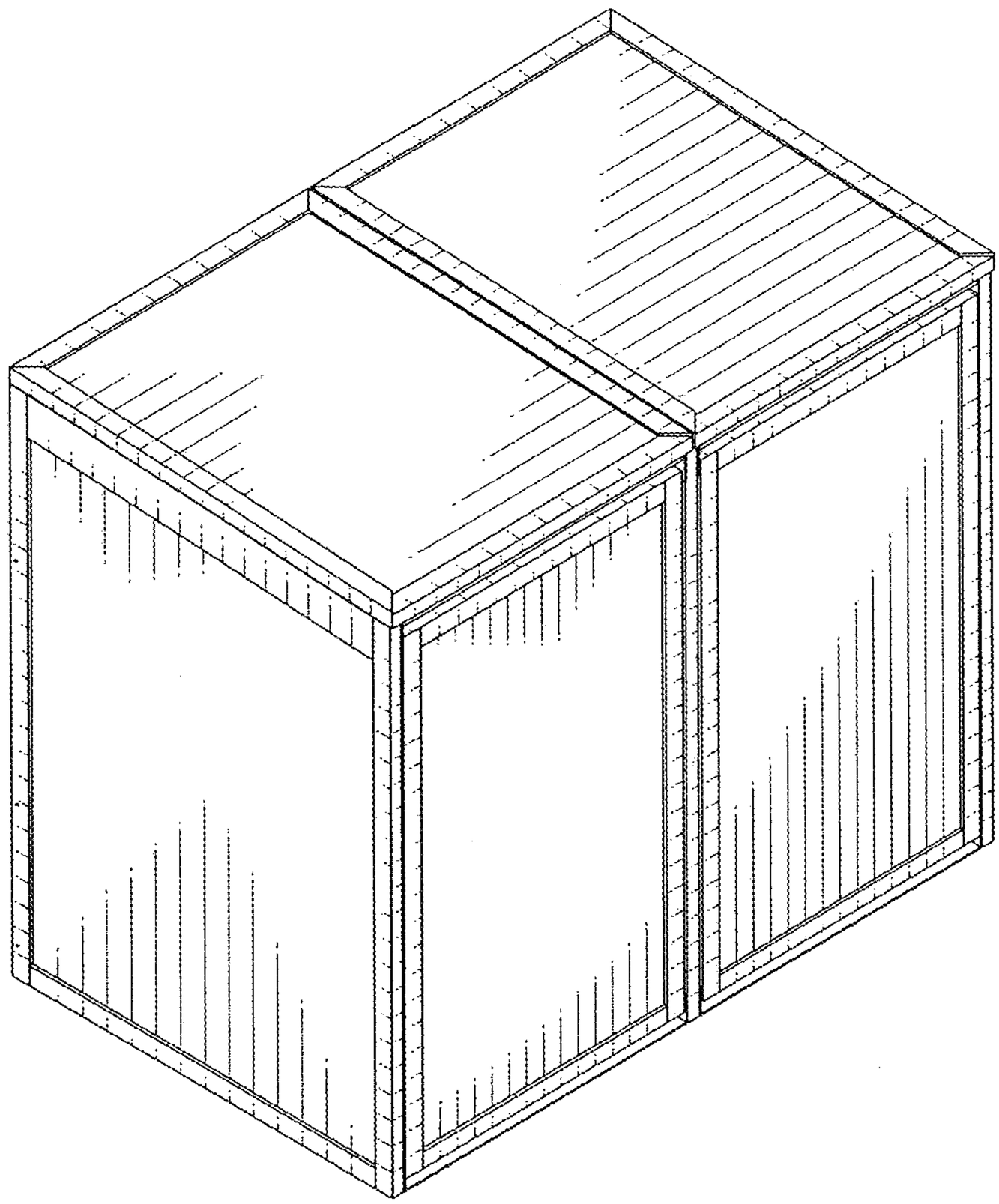

FIG. 1

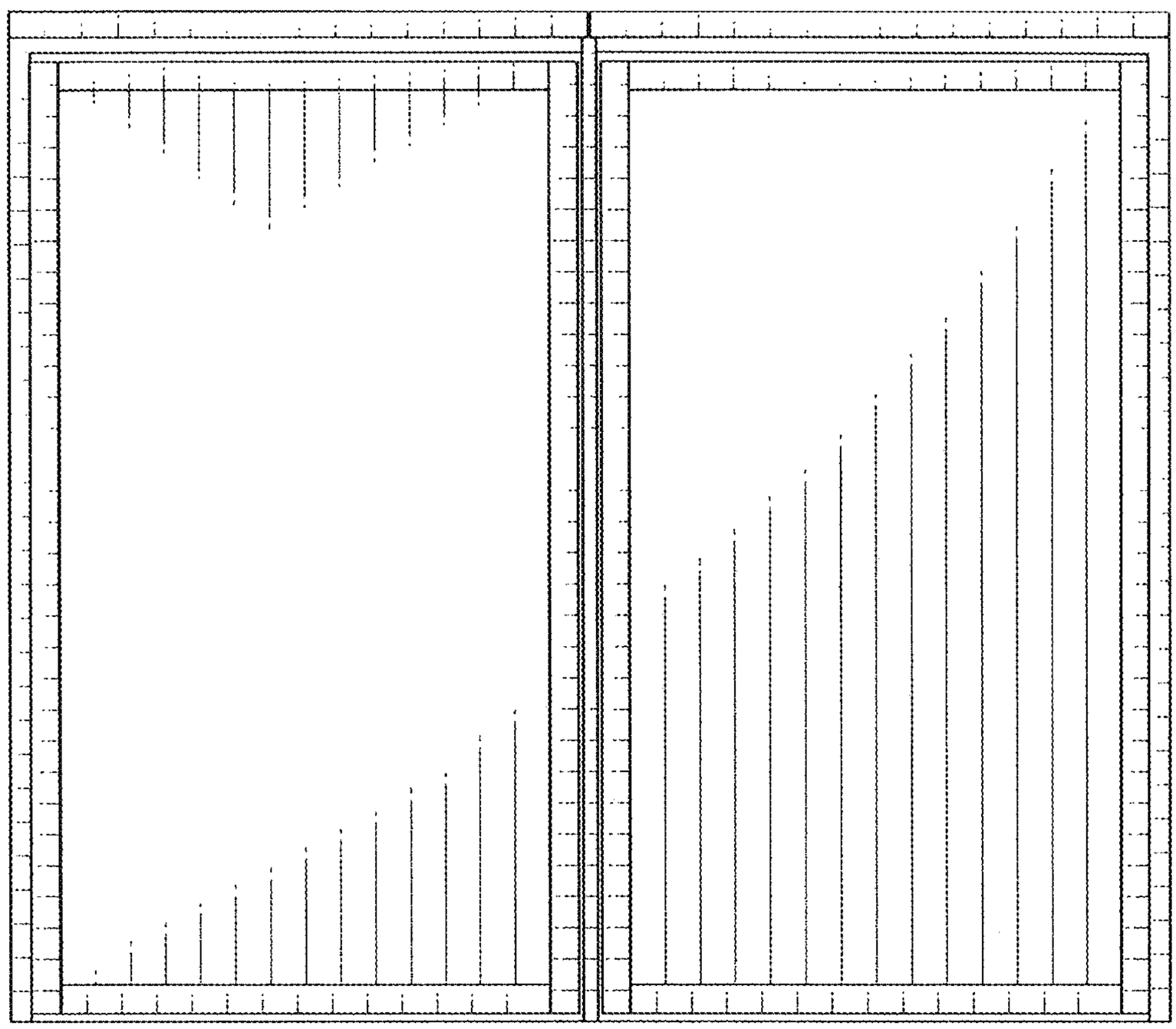

FIG. 2

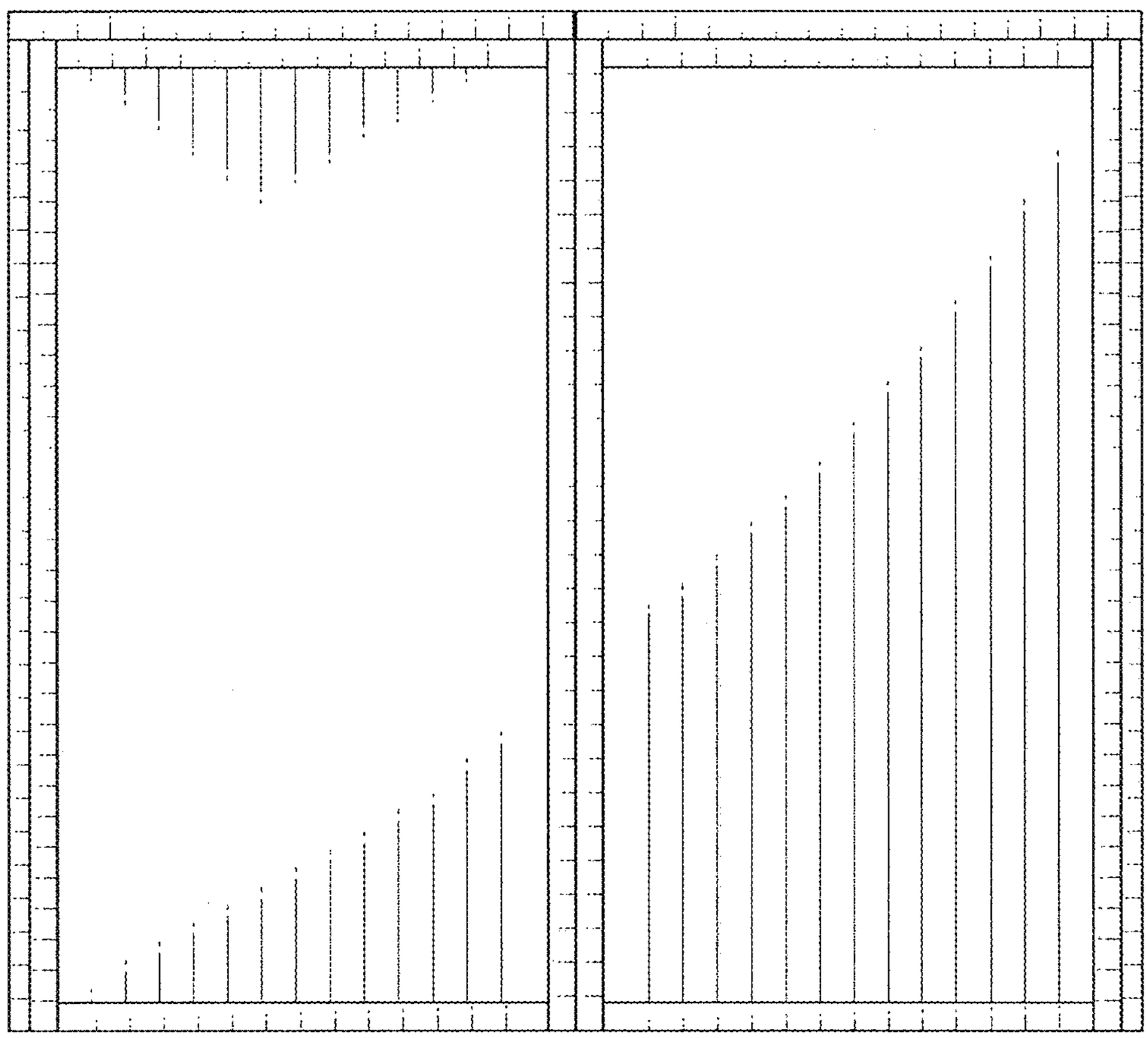

FIG. 3

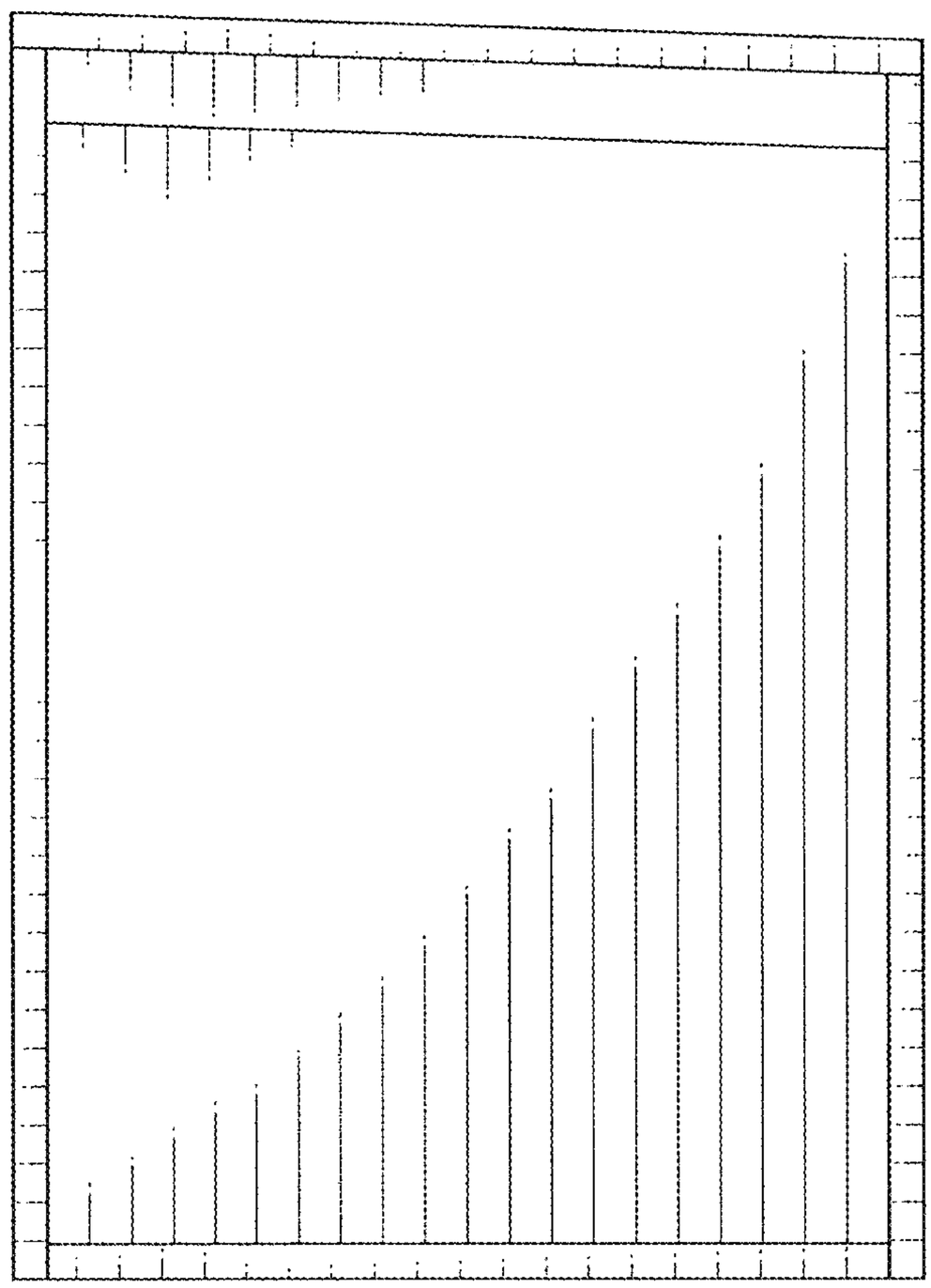

FIG. 4

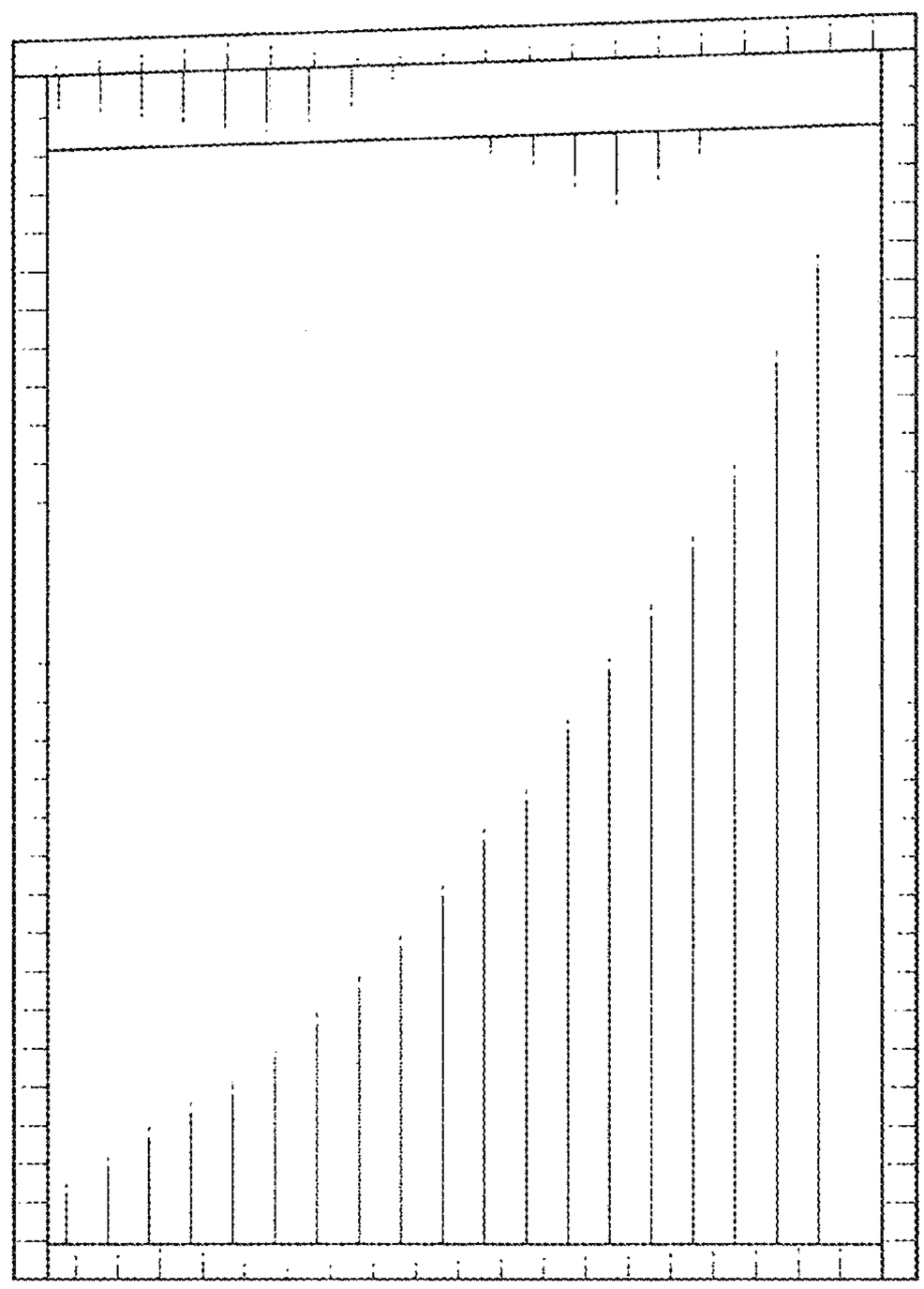

FIG. 5

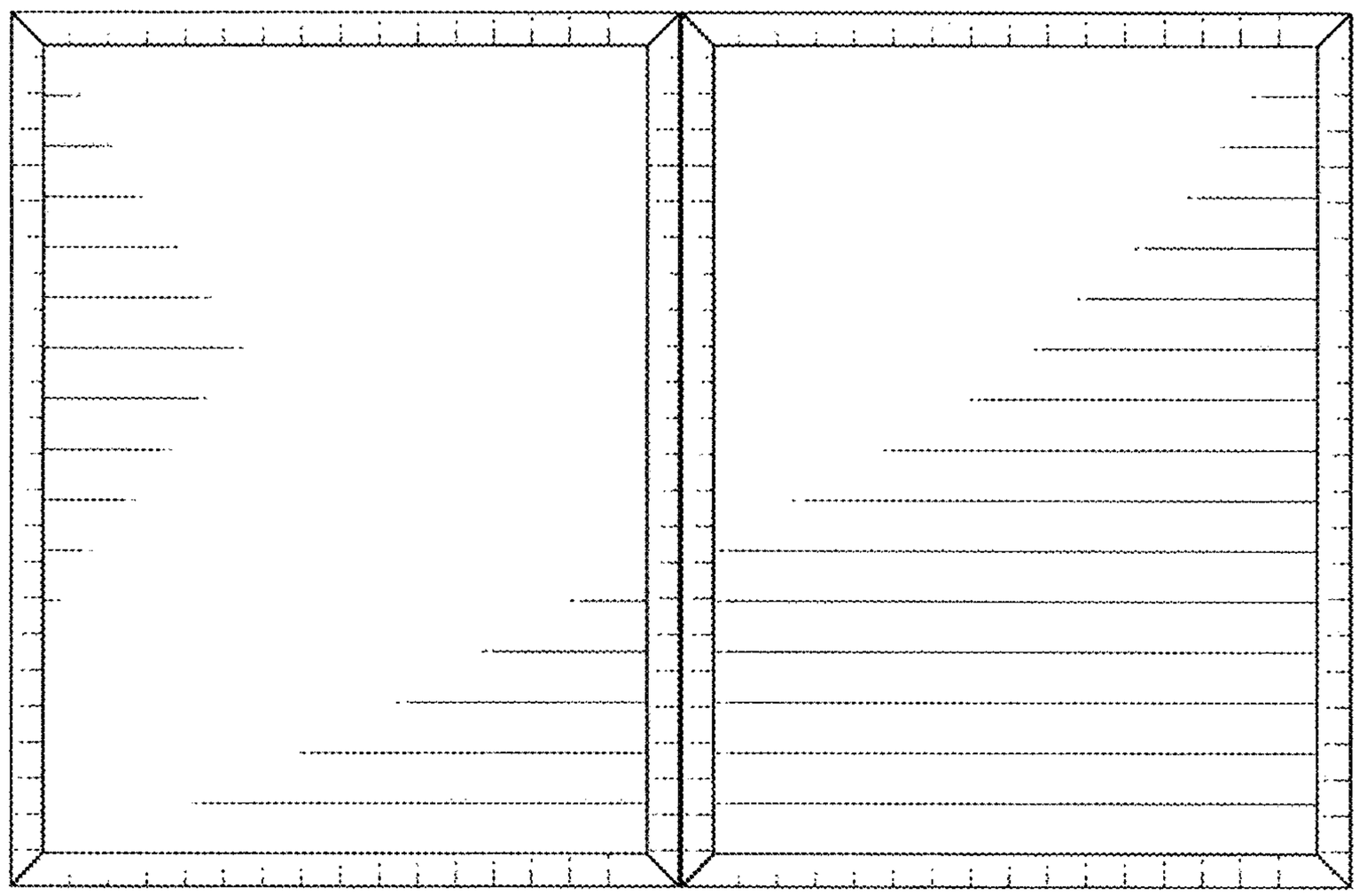

FIG.6

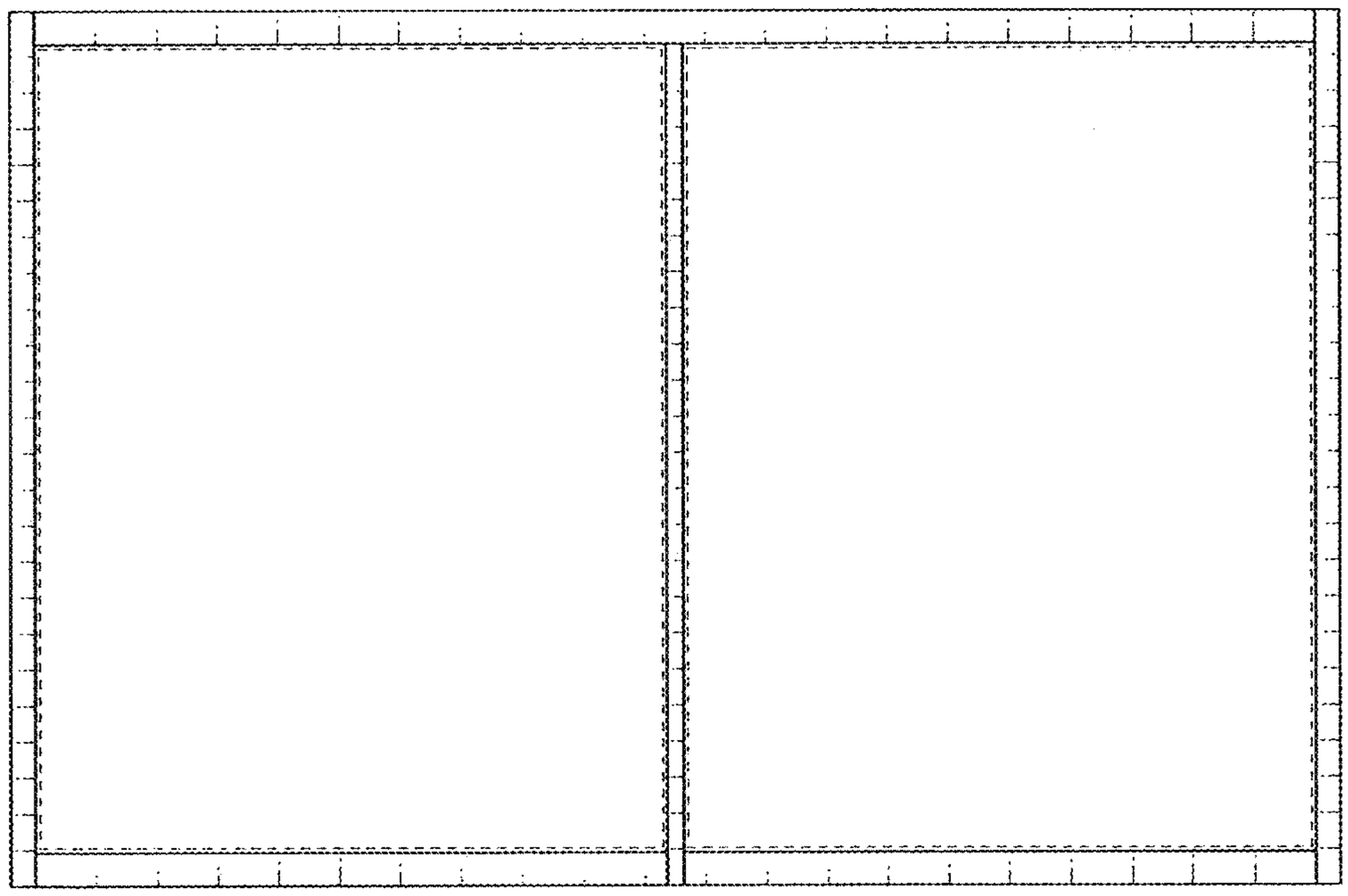

FIG. 7

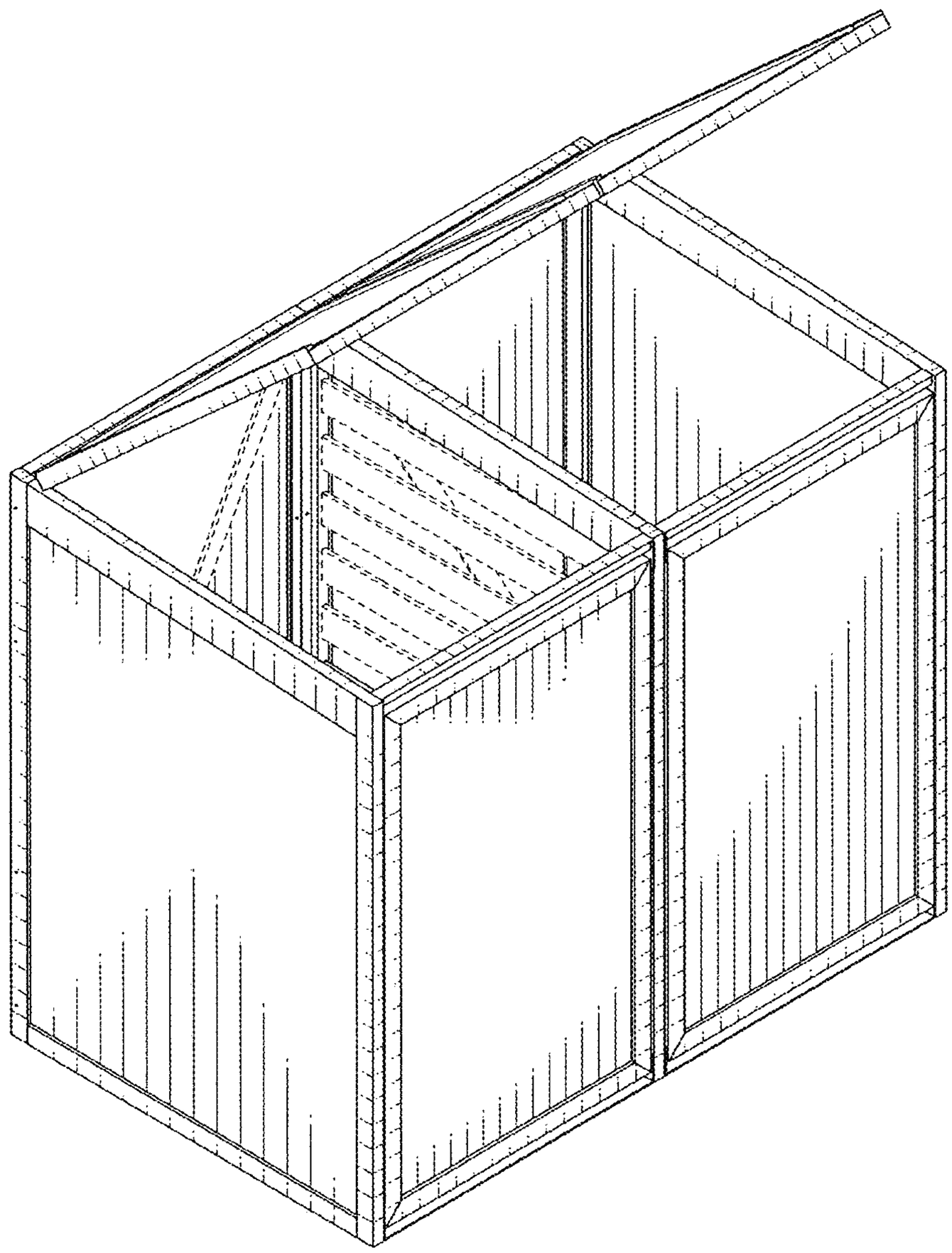

FIG. 8

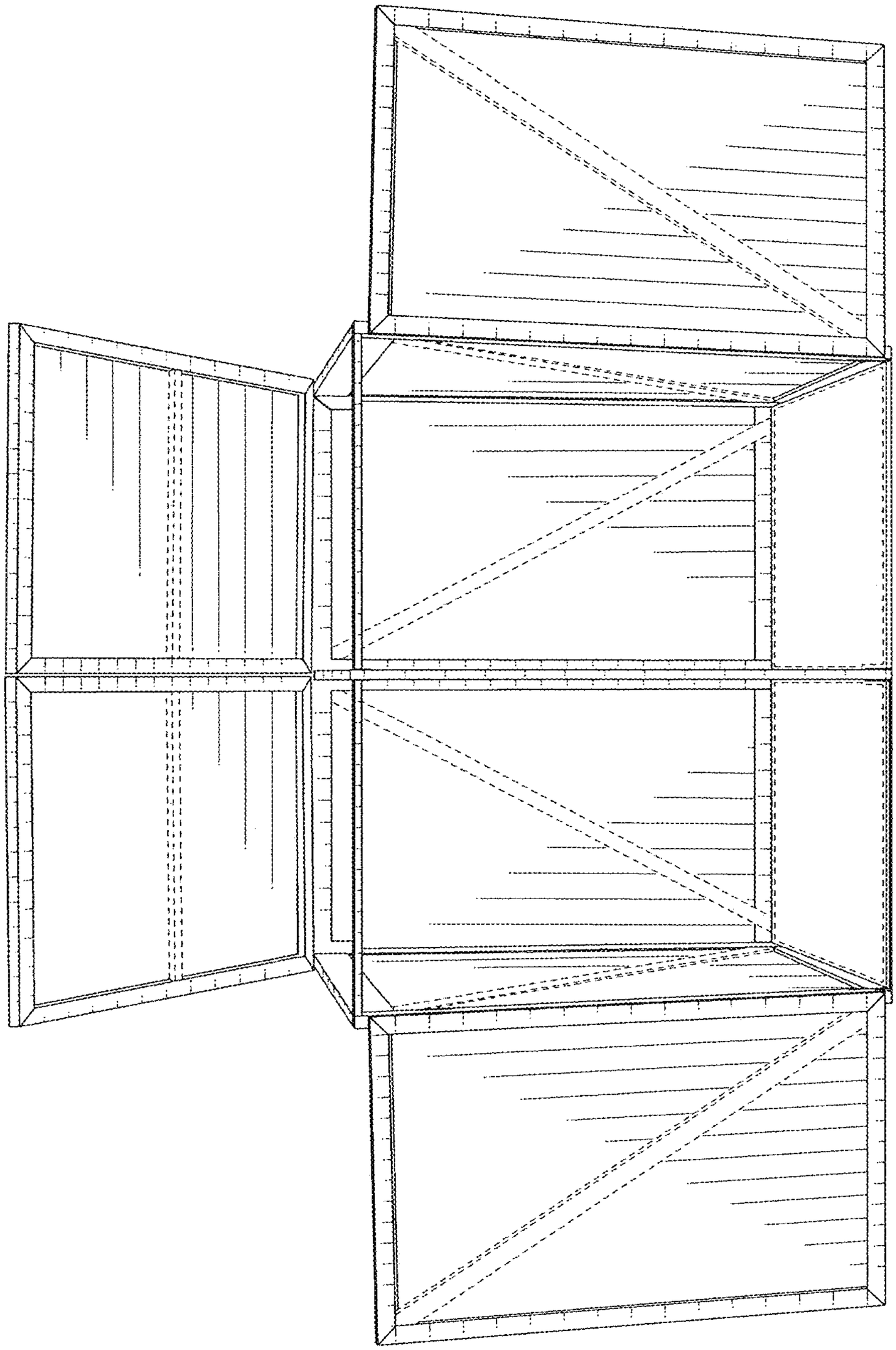

FIG. 9