US00D942908S

(12) United States Design Patent
Zhang

(10) Patent No.: US D942,908 S
(45) Date of Patent: ** Feb. 8, 2022

(54) **CAR CALIPER COVER**

(71) Applicant: **Jianping Zhang**, Shanghai (CN)

(72) Inventor: **Jianping Zhang**, Shanghai (CN)

(**) Term: **15 Years**

(21) Appl. No.: **29/749,277**

(22) Filed: **Sep. 3, 2020**

(30) **Foreign Application Priority Data**

Mar. 3, 2020 (CN) 202030068157.4

(51) **LOC (13) Cl.** **12-16**

(52) **U.S. Cl.**
USPC **D12/180**

(58) **Field of Classification Search**
USPC D12/114, 122, 123, 126, 127, 160, 180
CPC F16D 65/128; F16D 65/12; F16D 65/123; F16D 65/127; F16D 2065/1328; B22C 9/00; C23C 4/067
See application file for complete search history.

(56) **References Cited**

U.S. PATENT DOCUMENTS

D603,767	S	*	11/2009	Crippa	D12/180
D630,141	S	*	1/2011	Chen	D12/180
D739,319	S	*	9/2015	Montgomery	D12/180
D804,375	S	*	12/2017	Crippa	D12/180
D816,002	S	*	4/2018	Crippa	D12/180
D840,301	S	*	2/2019	Bonetti	D12/180
D842,782	S	*	3/2019	Verdelli	D12/180
D851,566	S	*	6/2019	Nessi	D12/180
D861,559	S	*	10/2019	Scotti	D12/180
D862,327	S	*	10/2019	Scotti	D12/180
D864,062	S	*	10/2019	Preda	D12/180
D864,808	S	*	10/2019	Crippa	D12/180
D864,809	S	*	10/2019	Puddu	D12/180
D865,594	S	*	11/2019	Honzawa	D12/180
D868,654	S	*	12/2019	Thorpe	D12/180
D868,655	S	*	12/2019	Thorpe	D12/180
D877,673	S	*	3/2020	Oku	D12/180
D892,007	S	*	8/2020	Scotti	D12/180
D902,097	S	*	11/2020	Ock	D12/180
10,844,917	B2	*	11/2020	Igawa	F16D 55/228
D918,107	S	*	5/2021	Zhang	D12/180
D931,171	S	*	9/2021	Nessi	D12/180

(Continued)

FOREIGN PATENT DOCUMENTS

WO WOD202979-001 * 10/2019

OTHER PUBLICATIONS

"Wilwood D-52 and D-154 Performance Caliper" Wilwood., posted date Aug. 25, 2020 [online], [retrieved on Oct. 7, 2021]. Retrieved from the Internet <URL:https://www.buybrakes.com/brake-calipers/wilwood-d-52-and-d-154-performance-caliper-kits> (Year: 2020).*

(Continued)

Primary Examiner — Darlington Ly
Assistant Examiner — Nasim Abdulaziz Ali
(74) *Attorney, Agent, or Firm* — Bayramoglu Law Offices LLC

(57) **CLAIM**

The ornamental design for a car caliper cover, as shown and described.

DESCRIPTION

FIG. **1** is a front elevational view of a car caliper cover showing my new design;
FIG. **2** is a rear elevational view thereof;
FIG. **3** is a left side elevational view thereof;
FIG. **4** is a right side elevational view thereof;
FIG. **5** is a top plan view thereof;
FIG. **6** is a bottom plan view thereof;
FIG. **7** is a front perspective view thereof; and,
FIG. **8** is a rear perspective view thereof.

1 Claim, 8 Drawing Sheets

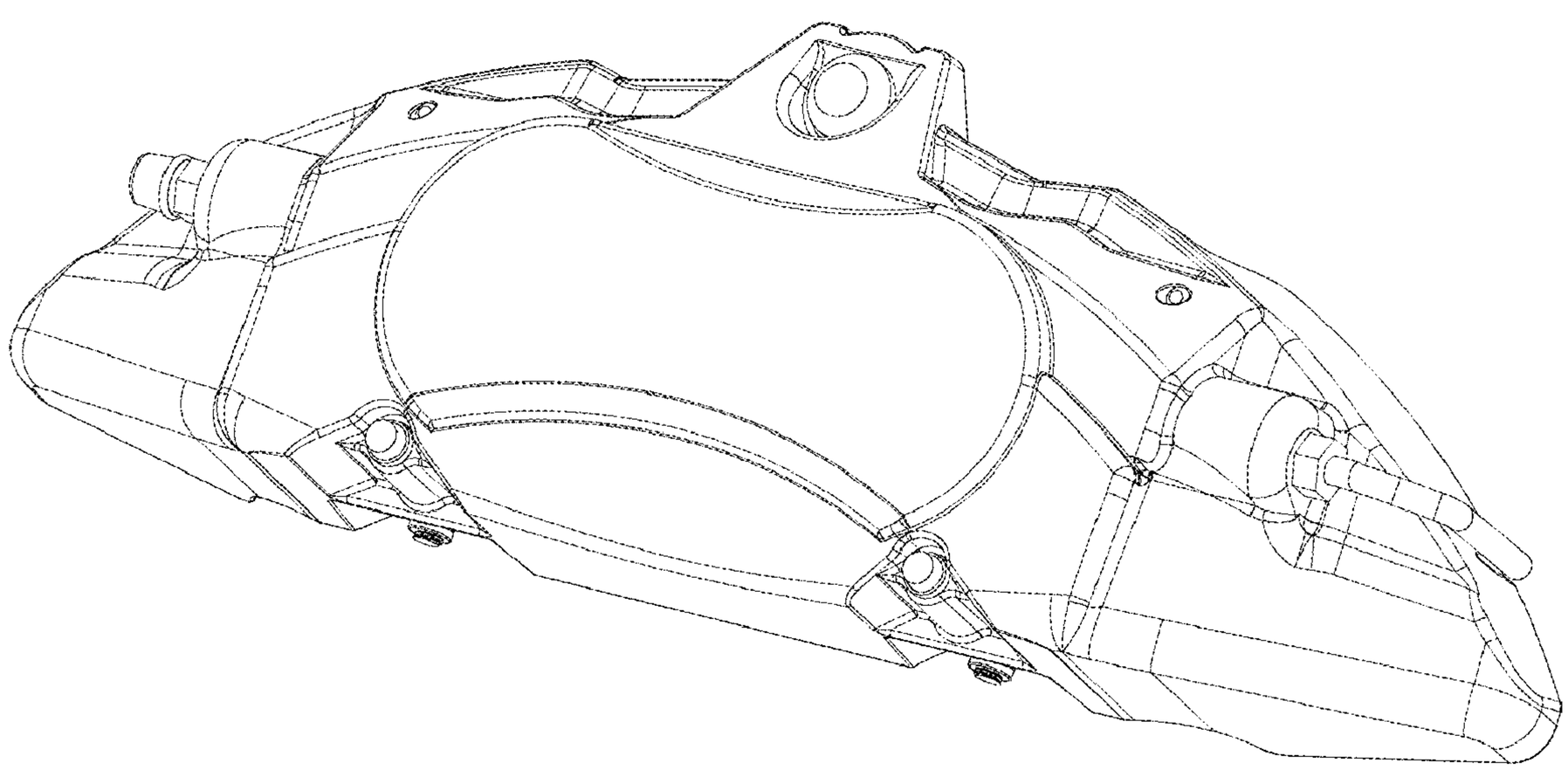

(56) **References Cited**

U.S. PATENT DOCUMENTS

2016/0053835	A1*	2/2016	Castellana	F16D 55/228 188/72.4
2020/0080601	A1*	3/2020	Liao	F16D 65/0978
2021/0317887	A1*	10/2021	Zhang	F16D 65/0081

OTHER PUBLICATIONS

"EBC®—Apollo Series Brake Calipers" EBC., posted date Oct. 16, 2016 [online], [retrieved on Oct. 7, 2021]. Retrieved from the Internet <URL:https://www.carid.com/ebc-brakes/ebc-apollo-series-brake-calipers.html?urlId=209662> (Year: 2016).*

"GM 7 Front Driver Side Disc Brake Caliper" ACDelco., posted date Oct. 10, 2007 [online], [retrieved on Oct. 7, 2021]. Retrieved from the Internet <URL:https://www.amazon.com/ACDelco-172-2287-Original-Equipment-Assembly/dp/B0010G0HP6/ref=psdc_46212011_t2_B01K8BWCUG> (Year: 2007).*

* cited by examiner

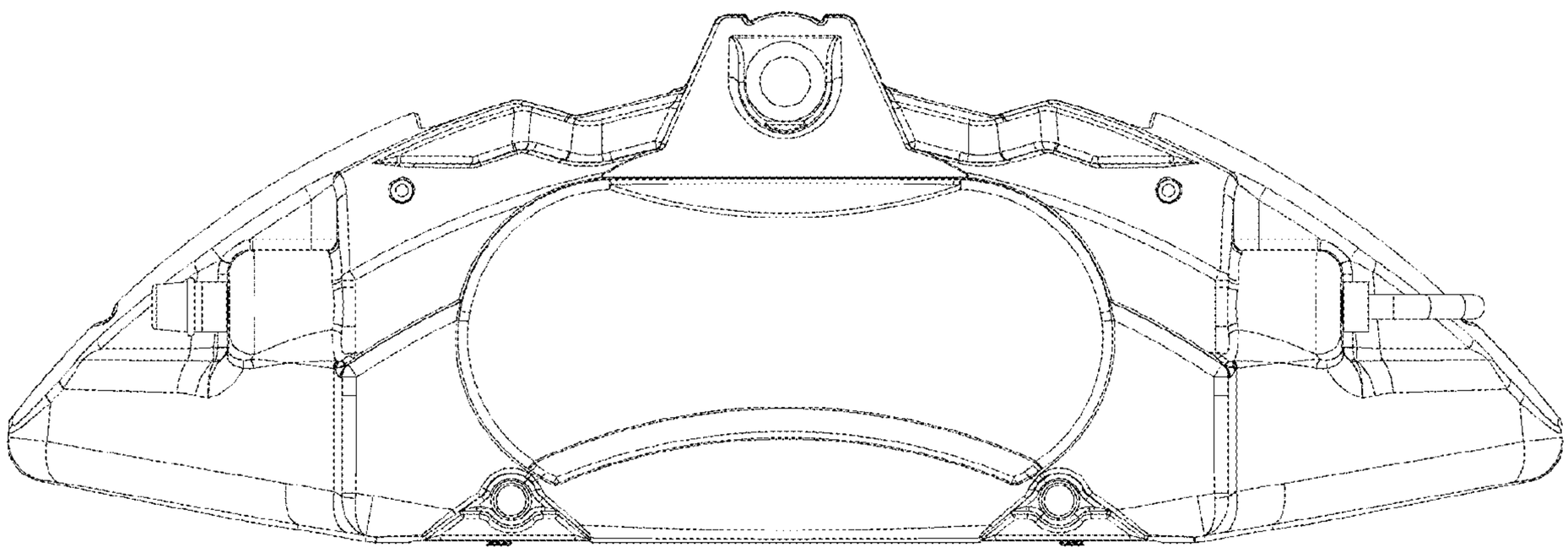

FIG. 1

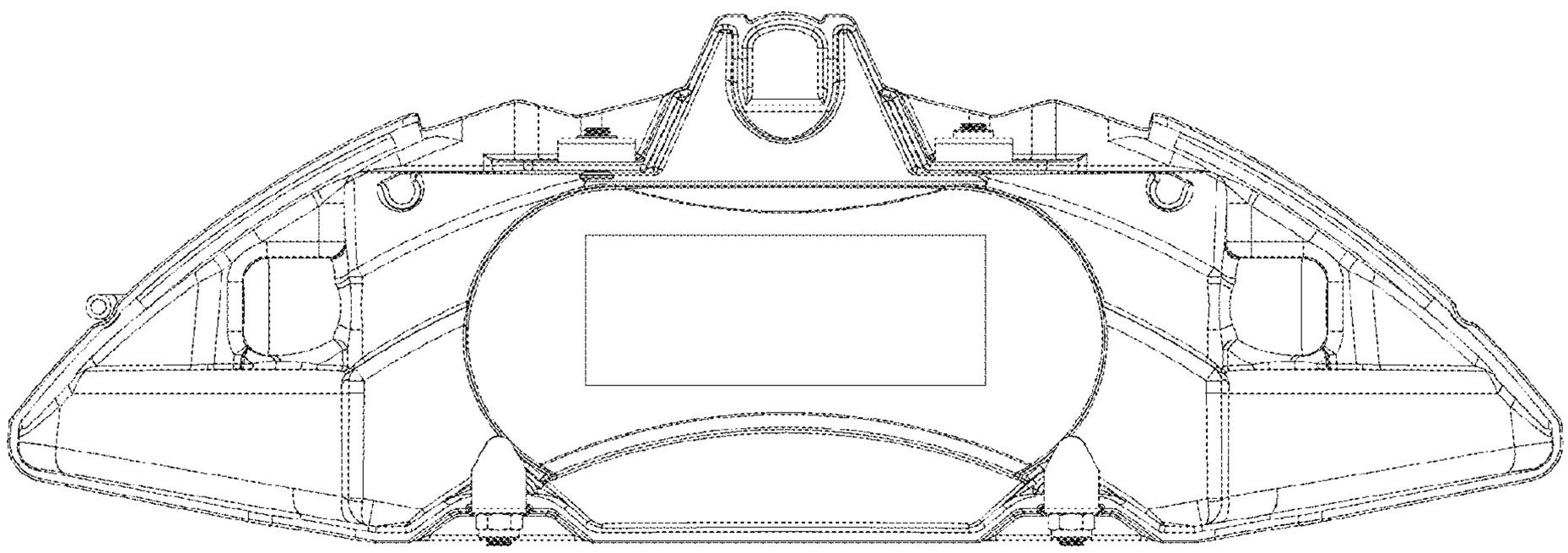

FIG. 2

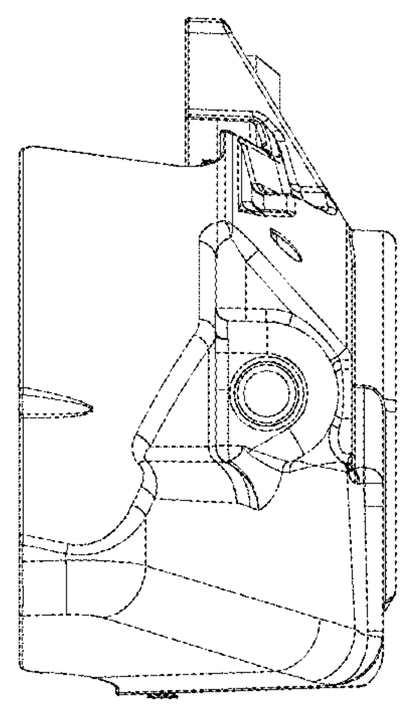

FIG. 3

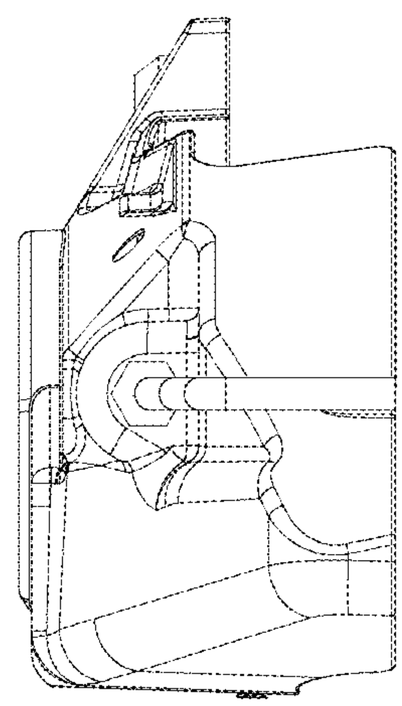

FIG. 4

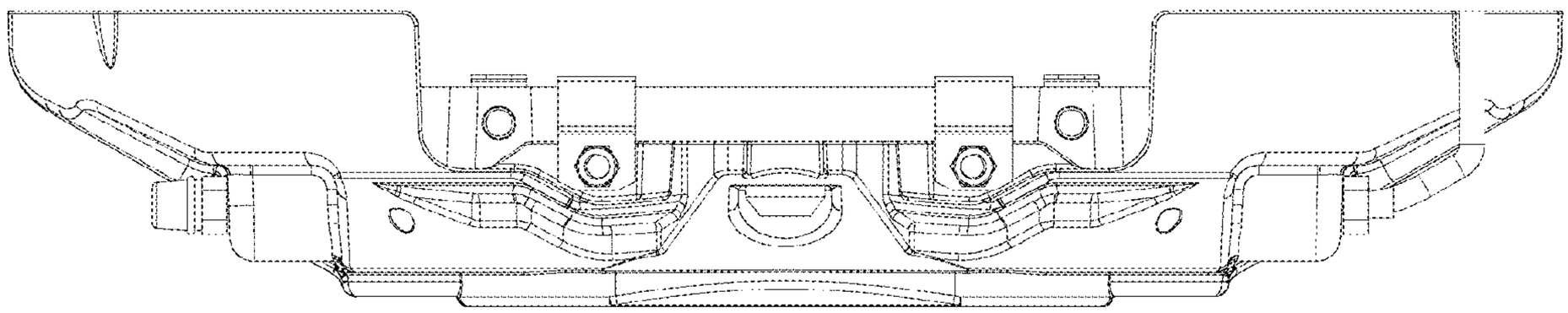

FIG. 5

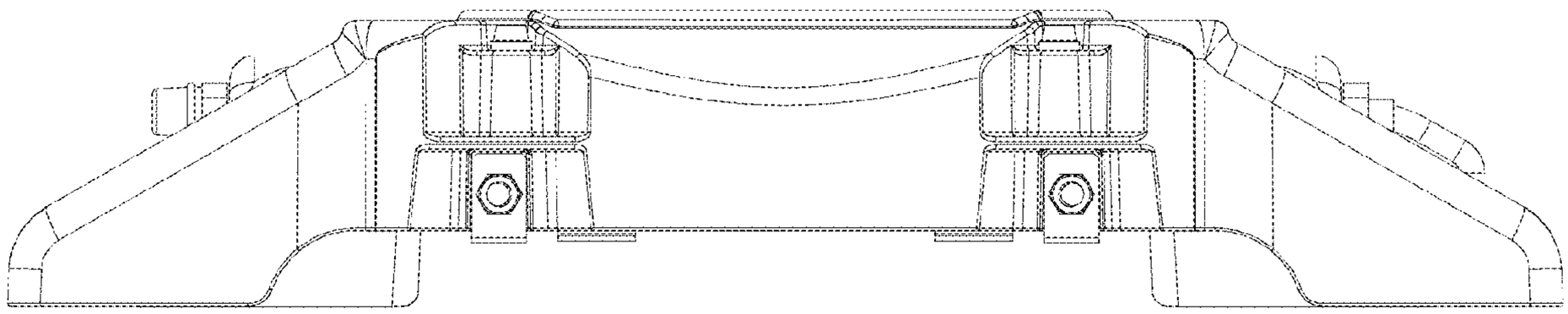

FIG. 6

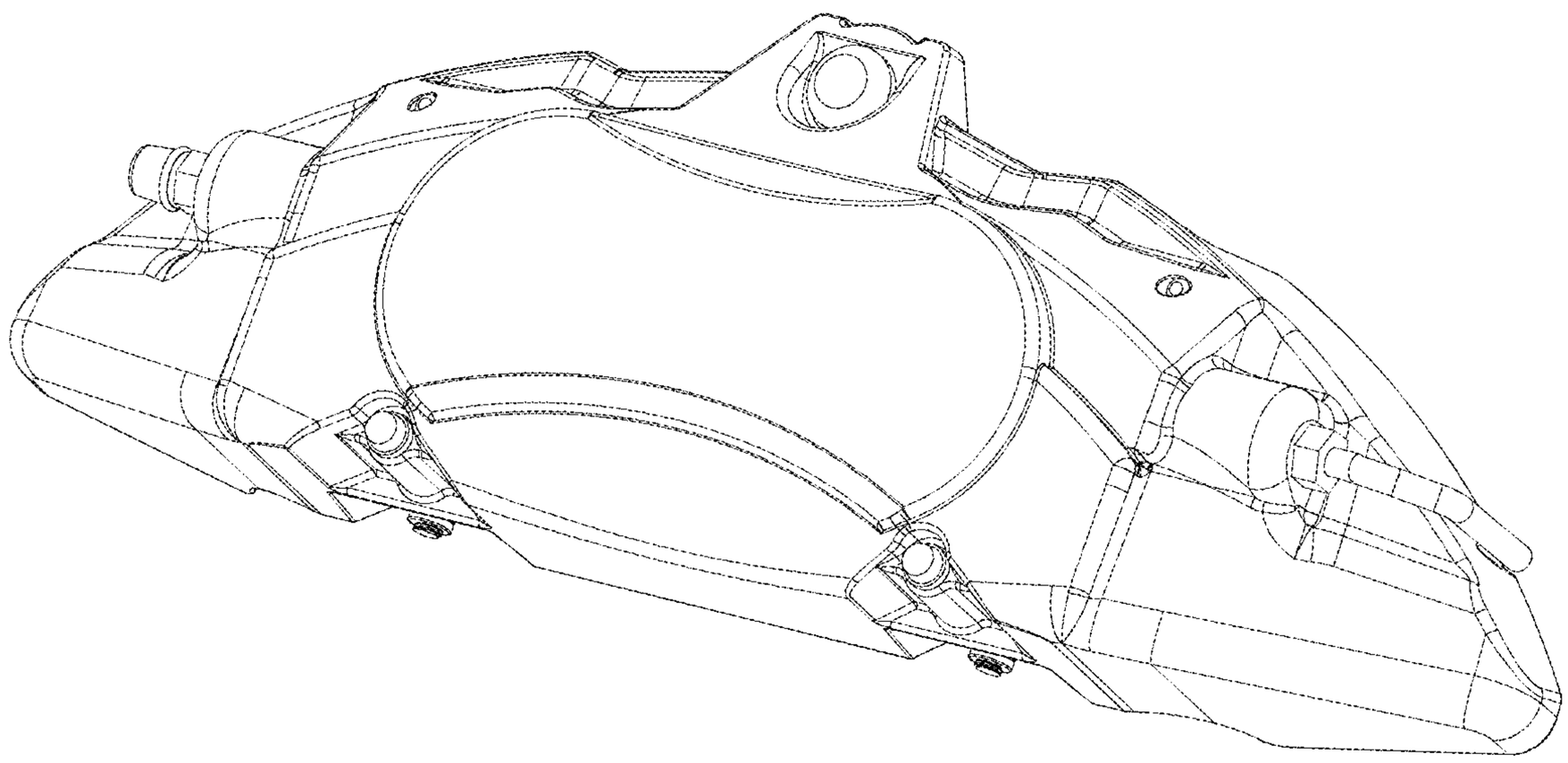

FIG. 7

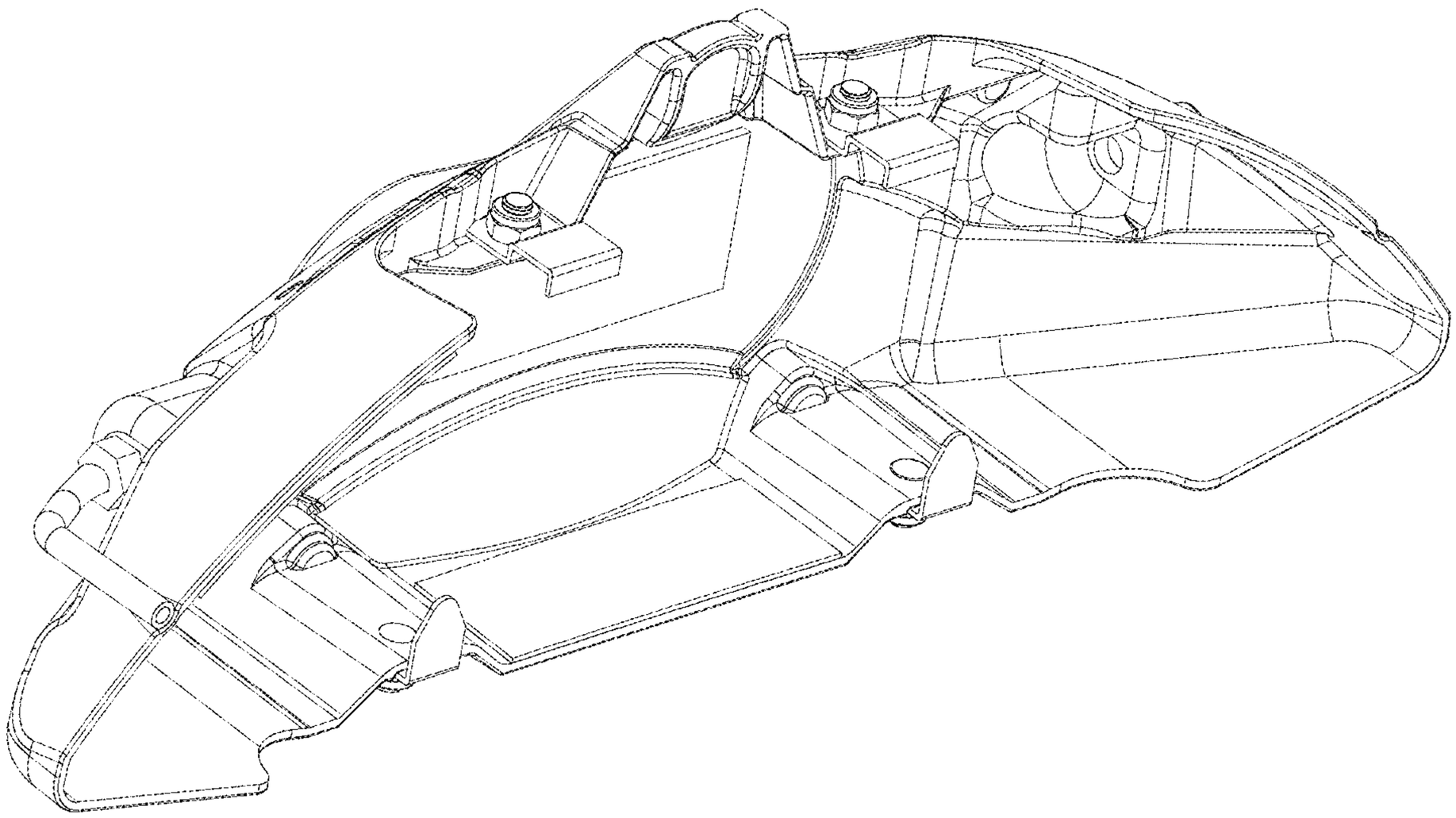

FIG. 8