US00D941895S

(12) United States Design Patent

Mordarski et al.

(10) Patent No.: US D941,895 S
(45) Date of Patent: ** Jan. 25, 2022

(54) **LASER BEAM-COMBINING ENGINE WITH FIBER OPTIC MODULE**

(71) Applicant: **PANASONIC INTELLECTUAL PROPERTY MANAGEMENT CO., LTD**, Osaka (JP)

(72) Inventors: **Mark Mordarski**, Tewksbury, MA (US); **Bryan Lochman**, Nashville, TN (US)

(73) Assignee: **PANASONIC INTELLECTUAL PROPERTY MANAGEMENT CO., LTD**, Osaka (JP)

(**) Term: **15 Years**

(21) Appl. No.: **29/737,724**

(22) Filed: **Jun. 11, 2020**

(51) **LOC (13) Cl.** **15-09**

(52) **U.S. Cl.**
USPC **D15/127**

(58) **Field of Classification Search**
USPC D15/122, 127, 199
CPC H01S 3/036; H01S 3/073
See application file for complete search history.

(56) **References Cited**

U.S. PATENT DOCUMENTS

5,659,459 A * 8/1997 Wakabayashi B41J 29/377 174/51
5,835,345 A * 11/1998 Staskus H05K 7/20254 361/699
D647,929 S * 11/2011 Mesropyan D15/199
D908,148 S * 1/2021 Chann D15/127
D908,751 S * 1/2021 Chann D15/127
D916,149 S * 4/2021 Sauter D15/127
D917,587 S * 4/2021 Sauter D15/127
D918,972 S * 5/2021 Chann D15/127
2006/0243238 A1* 11/2006 Anezaki ..... F02D 35/023 123/143 B
2009/0274176 A1* 11/2009 O'Shaughnessy ... G01N 21/255 372/9
2009/0284913 A1* 11/2009 Wakabayashi H04L 65/607 361/679.54
2009/0285256 A1* 11/2009 Adamkiewicz H01S 3/025 372/107
2010/0270273 A1* 10/2010 Sekiya H01L 21/78 219/121.6
2012/0177073 A1* 7/2012 Stephens, IV H01S 5/02423 372/35
2014/0041612 A1* 2/2014 Furutani ..... F02P 23/04 123/143 B
2014/0200636 A1* 7/2014 Reichert A61N 5/0616 607/89

(Continued)

Primary Examiner — Patricia A Palasik
(74) *Attorney, Agent, or Firm* — Morgan, Lewis & Bockius LLP

(57) **CLAIM**

The ornamental design for a laser beam-combining engine with fiber optic module, substantially as shown and described.

DESCRIPTION

FIG. **1** is a perspective view of a laser beam-combining engine incorporating the design and including a fiber optic module, an optional beam-shaping module, and locations for one, two, three, or four laser resonators;
FIG. **2** is a left-side elevation view thereof;
FIG. **3** is a back view thereof;
FIG. **4** is a right-side elevation view thereof;
FIG. **5** is a front view thereof;
FIG. **6** is a top view thereof;
FIG. **7** is a bottom view thereof; and,
FIG. **8** is another perspective view thereof.
The broken lines showing features of the engine form no part of the claimed design.

1 Claim, 8 Drawing Sheets

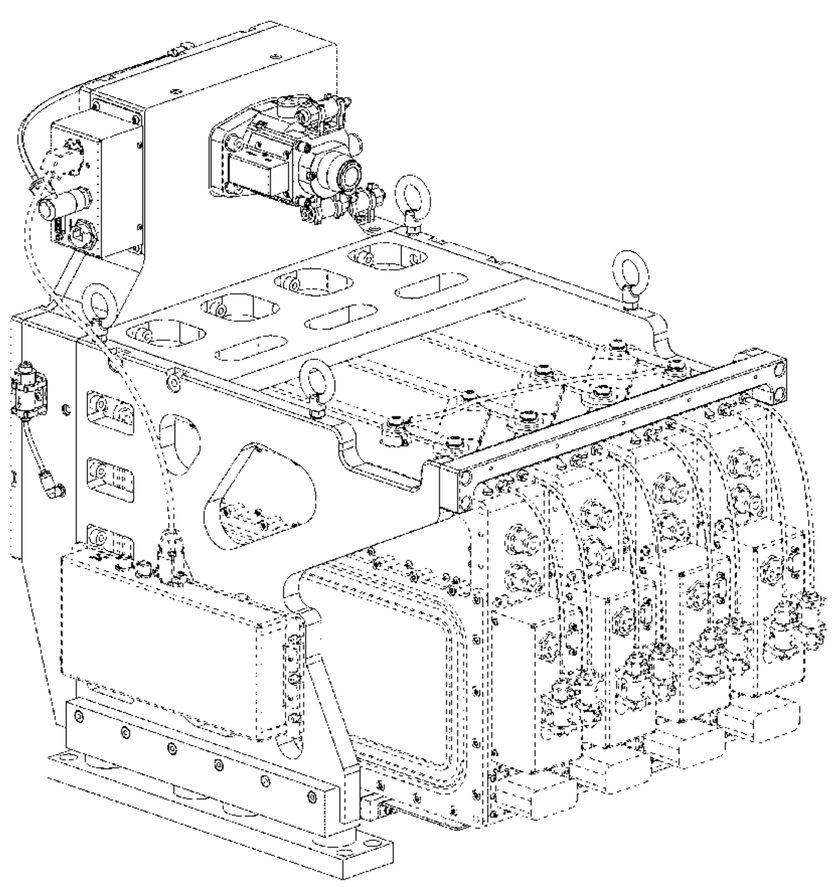

(56) **References Cited**

U.S. PATENT DOCUMENTS

2016/0028210	A1*	1/2016	O'Shaughnessy	H01S 3/2383 372/34
2017/0160629	A1*	6/2017	Hachair	H01S 5/023
2017/0250516	A1*	8/2017	Kiyosawa	H01S 5/423
2017/0365978	A1*	12/2017	Man	B23K 26/382
2018/0269656	A1*	9/2018	Hagita	H01S 5/18313
2018/0348453	A1*	12/2018	Lee	G02B 6/421
2020/0119511	A1*	4/2020	Lochman	H01S 3/0405
2021/0167575	A1*	6/2021	Sauter	H01S 5/02218

* cited by examiner

Fig. 1

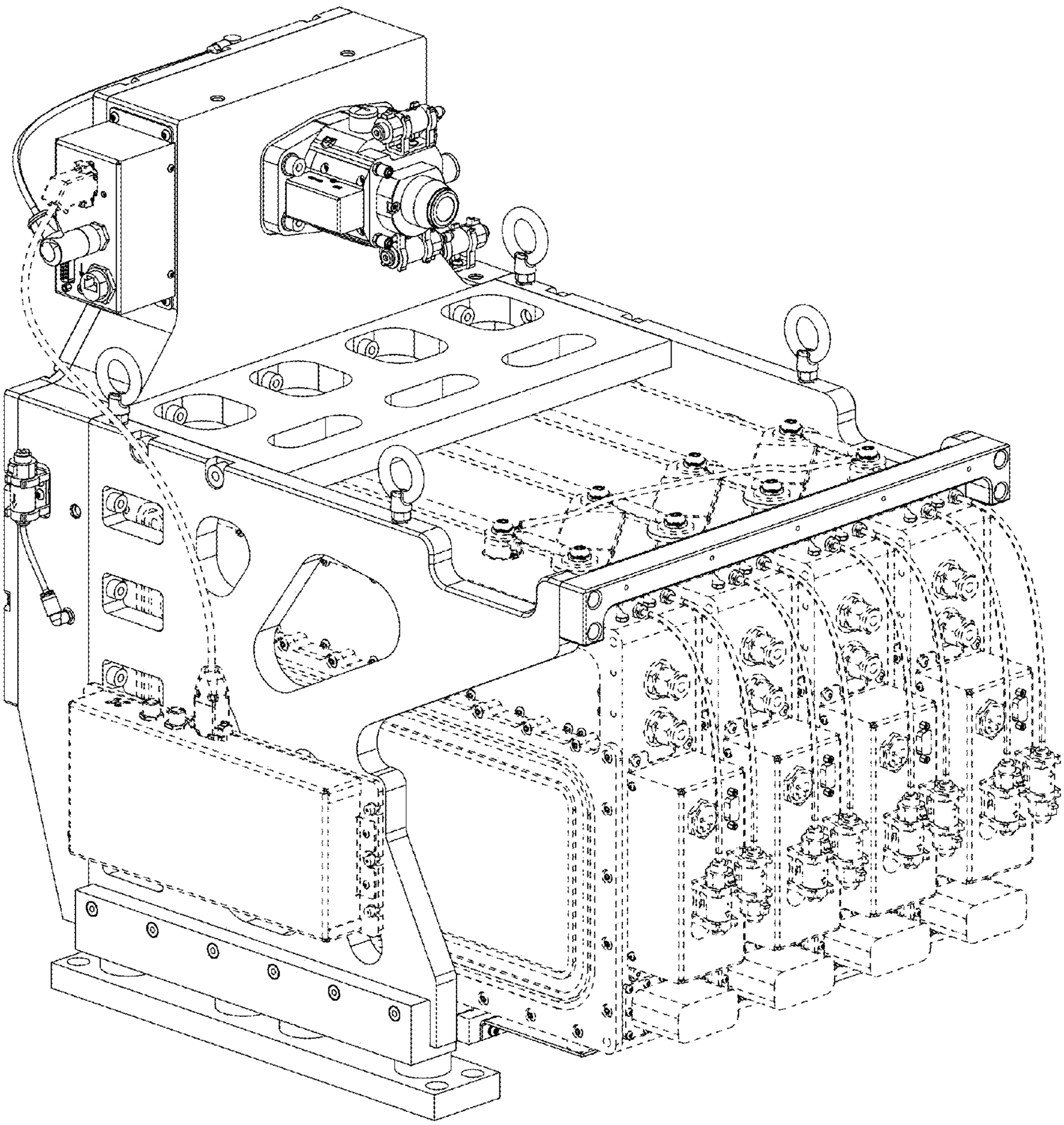

Fig. 2

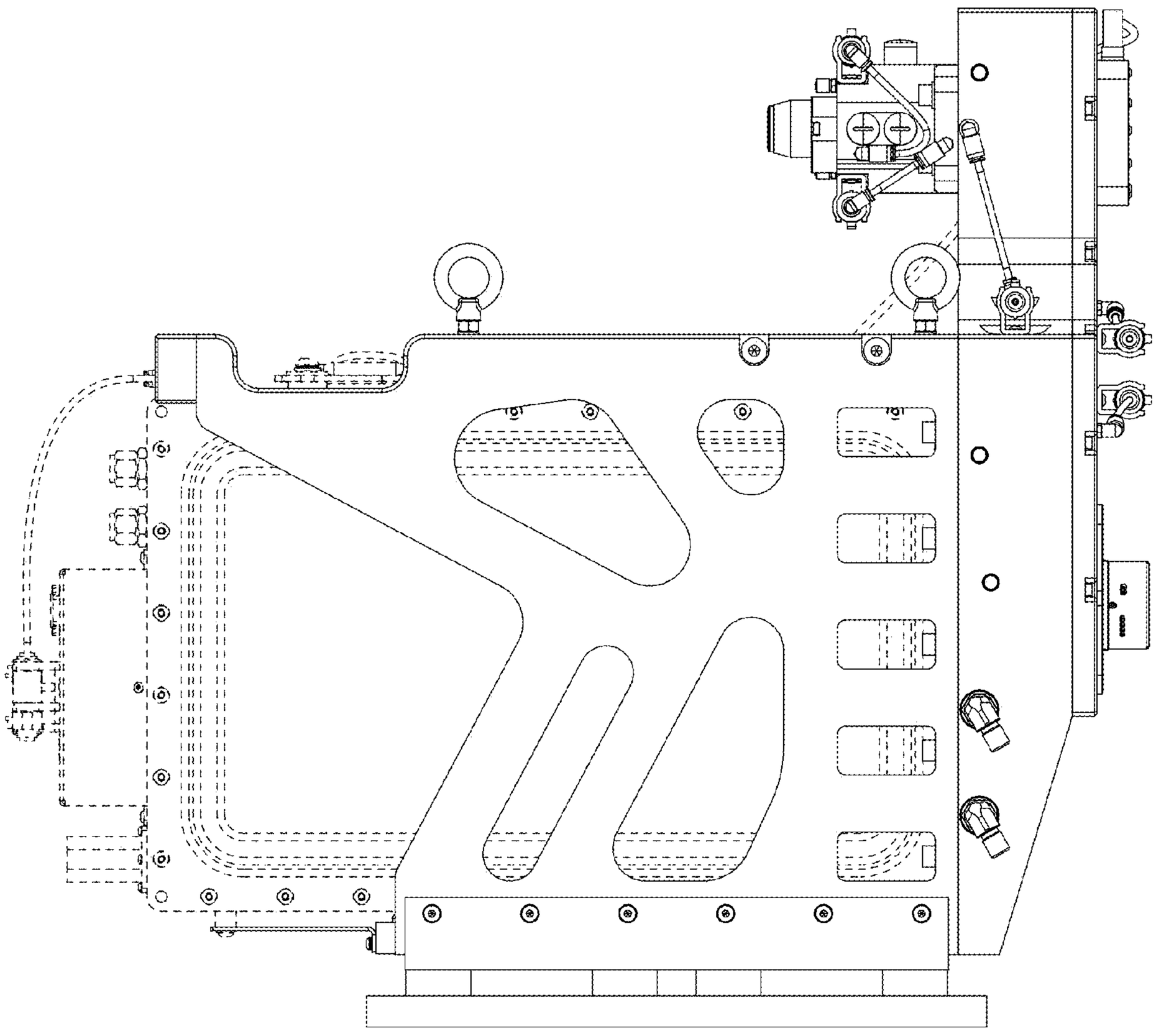

Fig. 3

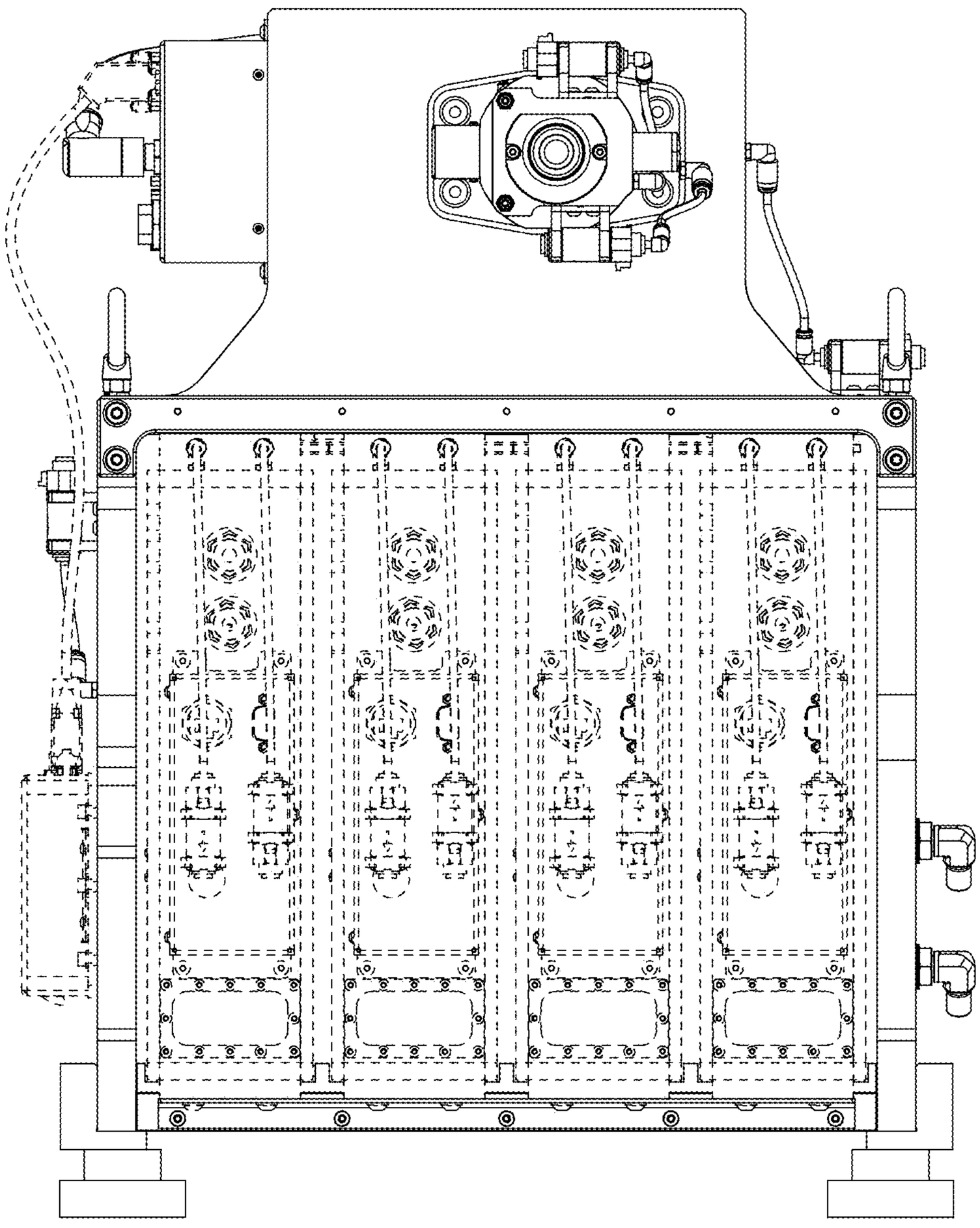

Fig. 4

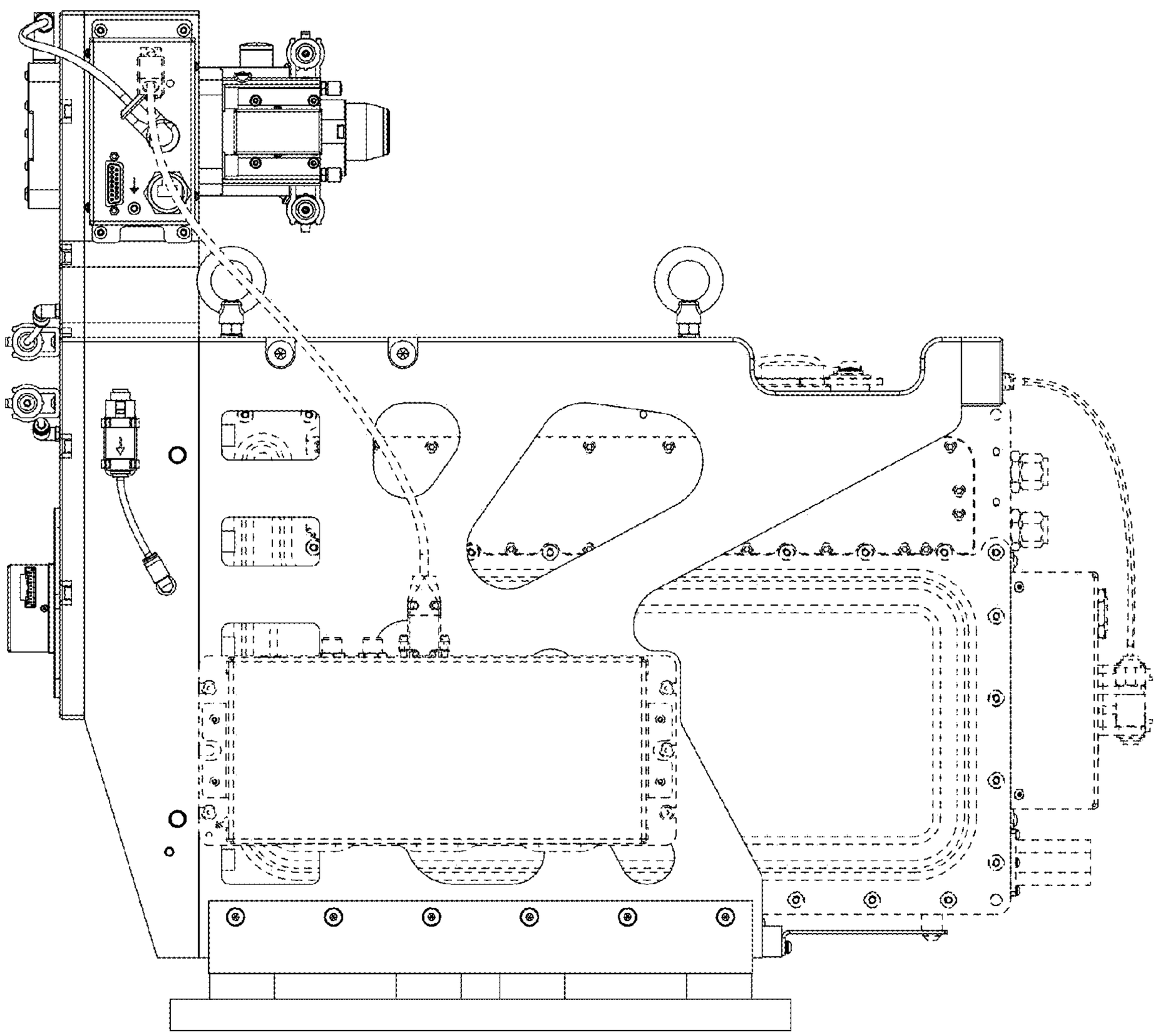

Fig. 5

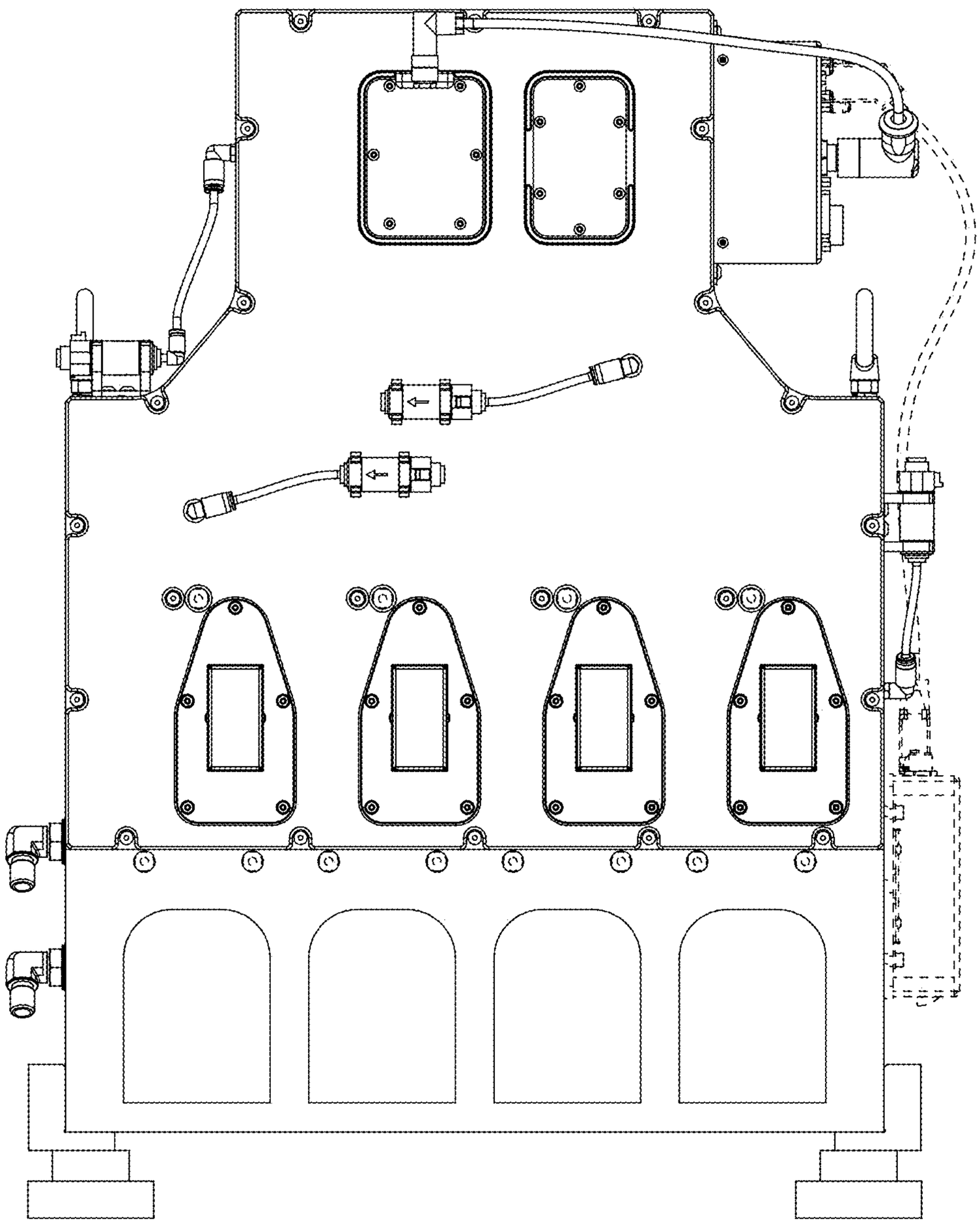

Fig. 6

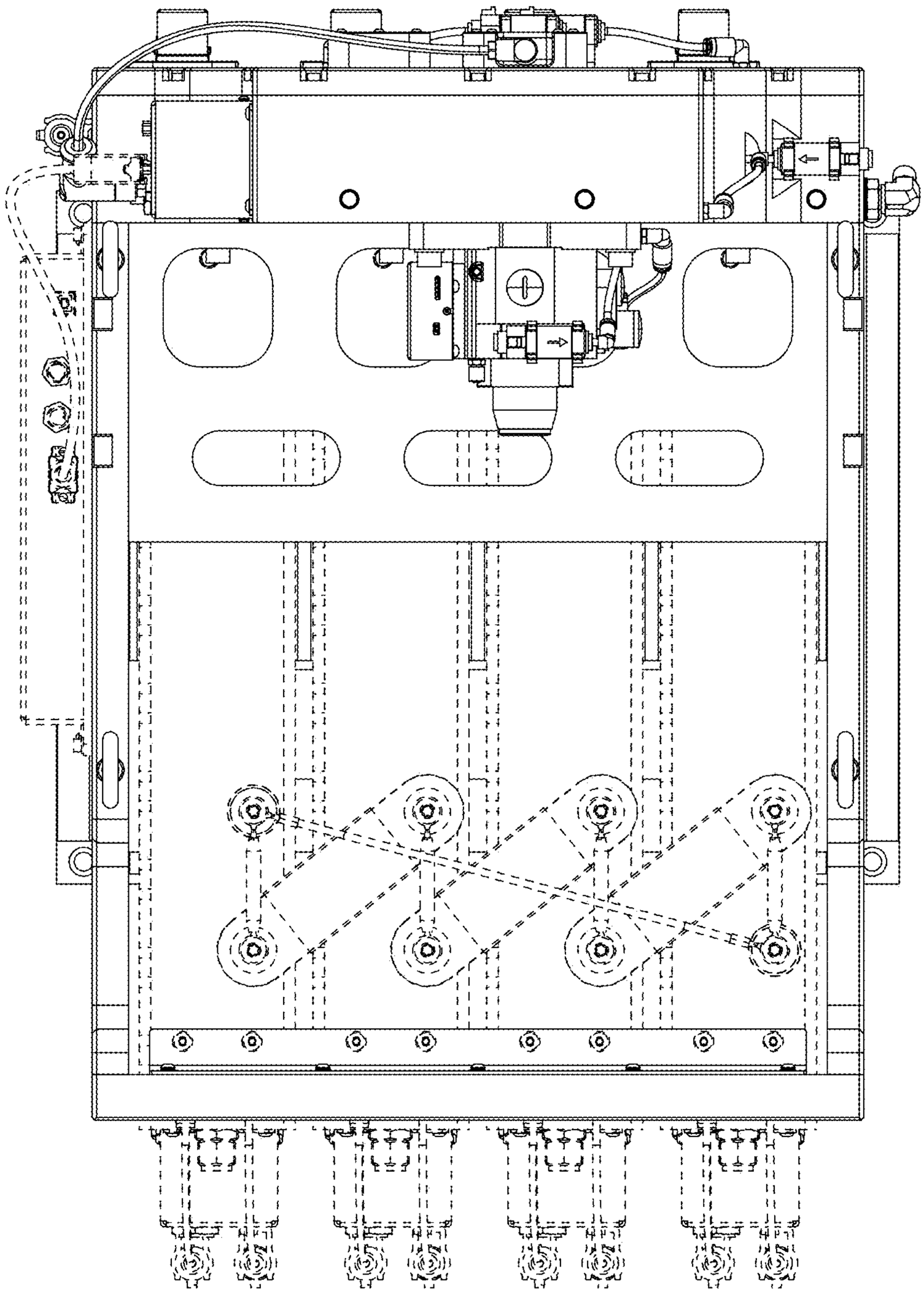

Fig. 7

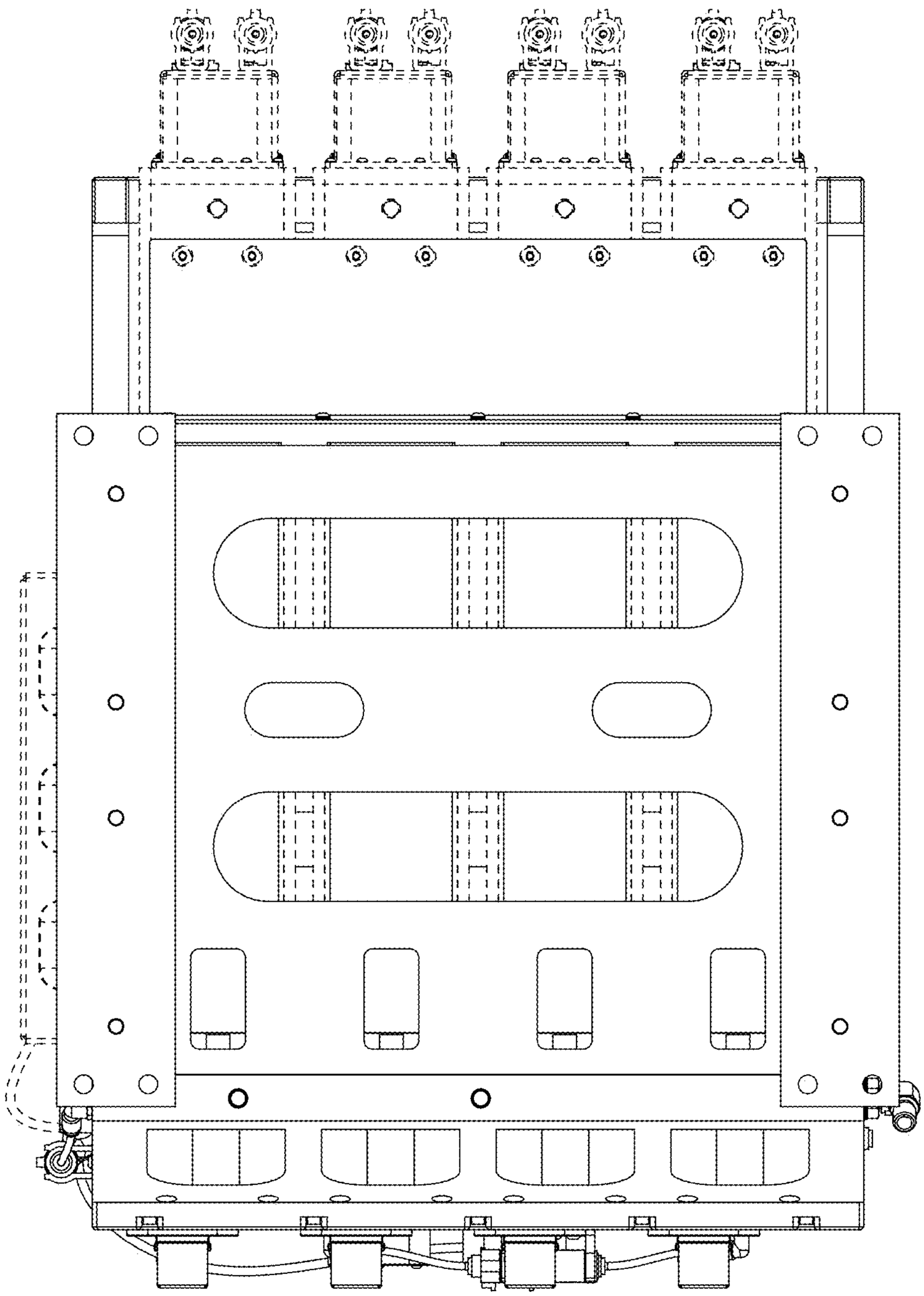
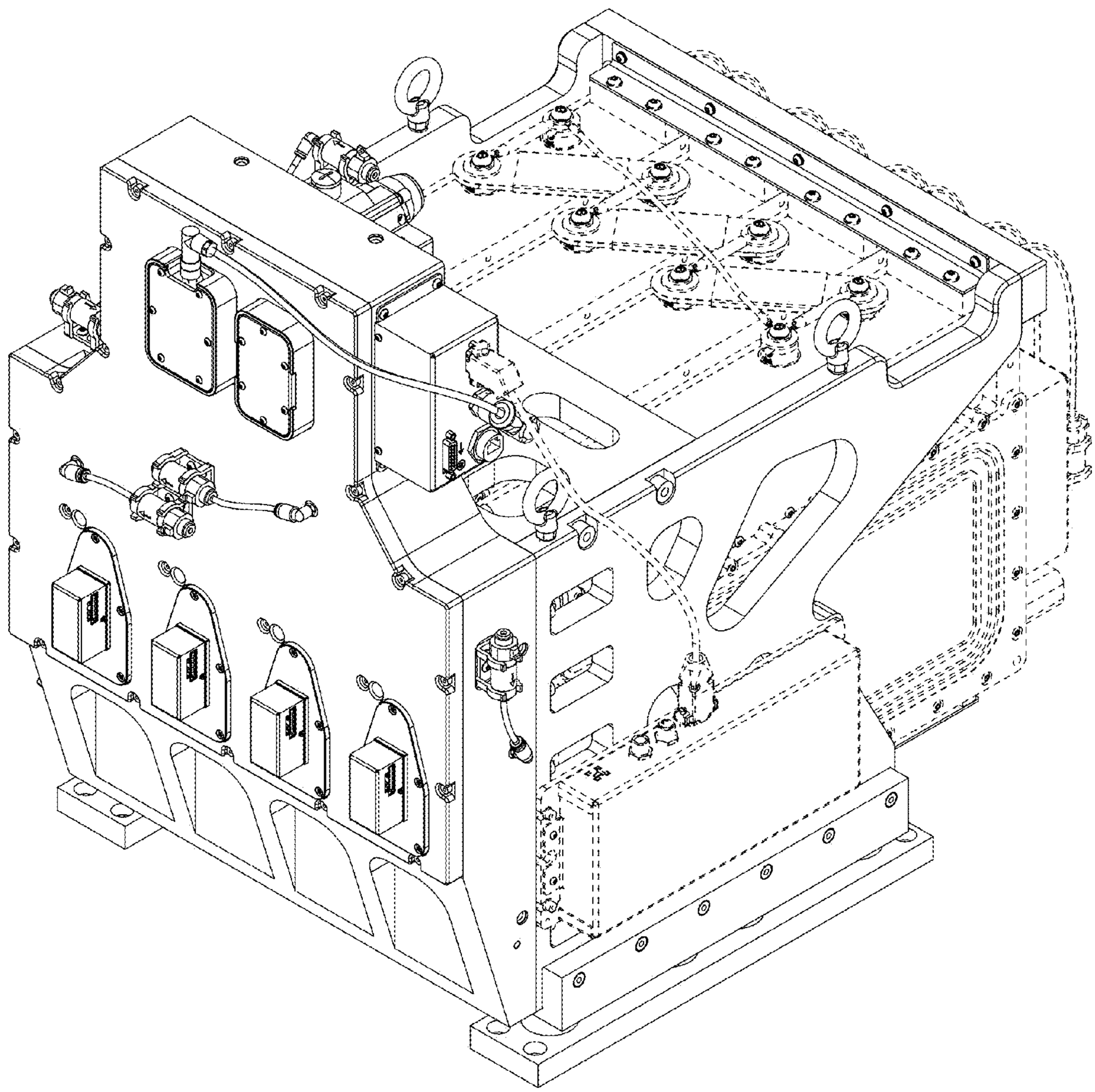
Fig. 8