US00D941811S

(12) United States Design Patent

Lam et al.

(10) Patent No.: US D941,811 S
(45) Date of Patent: ** Jan. 25, 2022

(54) **TABLET COMPUTER**

(71) Applicant: **Google LLC**, Mountain View, CA (US)

(72) Inventors: **Lawrence Lam**, San Jose, CA (US); **Sungyun Kim**, Sunnyvale, CA (US); **Bernardo Núñez Rojas**, San Francisco, CA (US); **Christophe Koch**, Santa Cruz, CA (US)

(73) Assignee: **GOOGLE LLC**, Mountain View, CA (US)

(**) Term: **15 Years**

(21) Appl. No.: **29/676,716**

(22) Filed: **Jan. 14, 2019**

Related U.S. Application Data

(62) Division of application No. 29/611,591, filed on Jul. 24, 2017, now Pat. No. Des. 842,856.

(51) **LOC (13) Cl.** **14-02**

(52) **U.S. Cl.**
USPC **D14/315**

(58) **Field of Classification Search**
USPC ..... D14/138 AA, 138 AB, 138 AC, 138 AD, D14/138 C, 138 G, 248, 315–318,
(Continued)

(56) **References Cited**

U.S. PATENT DOCUMENTS

D463,797 S 10/2002 Andre et al.
6,670,950 B1 12/2003 Chin et al.
(Continued)

FOREIGN PATENT DOCUMENTS

CA 178578 * 8/2019
CA 185313 * 8/2019
(Continued)

OTHER PUBLICATIONS

Google Pixelbook, date first available: Oct. 4, 2017, [retrieved Sep. 9, 2021], Retrieved from Internet, URL: <https://www.amazon.com/Google-Pixelbook-RAM-128GB-GA00122-US/dp/B075JSK7TR> (Year: 2017).*

(Continued)

Primary Examiner — Barbara Fox
Assistant Examiner — Aram Kwon
(74) *Attorney, Agent, or Firm* — Plumsea Law Group, LLC

(57) **CLAIM**

The ornamental design for a tablet computer, as shown and described.

DESCRIPTION

The present application is related to U.S. Design patent application Ser. No. 29/611,586, filed on Jul. 24, 2017, and entitled Open Laptop Computer, and to U.S. Design patent application Ser. No. 29/611,587, filed on Jul. 24, 2017, and entitled Closed Laptop Computer, the entire disclosures all of which are incorporated herein by reference.

FIG. **1** is a front perspective view of a tablet computer according to our design;
FIG. **2** is a front elevation view thereof;
FIG. **3** is a rear elevation view thereof;
FIG. **4** is a right side elevation view thereof;
FIG. **5** is a left side elevation view thereof;
FIG. **6** is a top elevation view thereof;
FIG. **7** is a bottom elevation view thereof; and,
FIG. **8** is a rear perspective view thereof.

The broken lines in the drawings depict portions of the tablet computer that form no part of the claimed design.

1 Claim, 6 Drawing Sheets

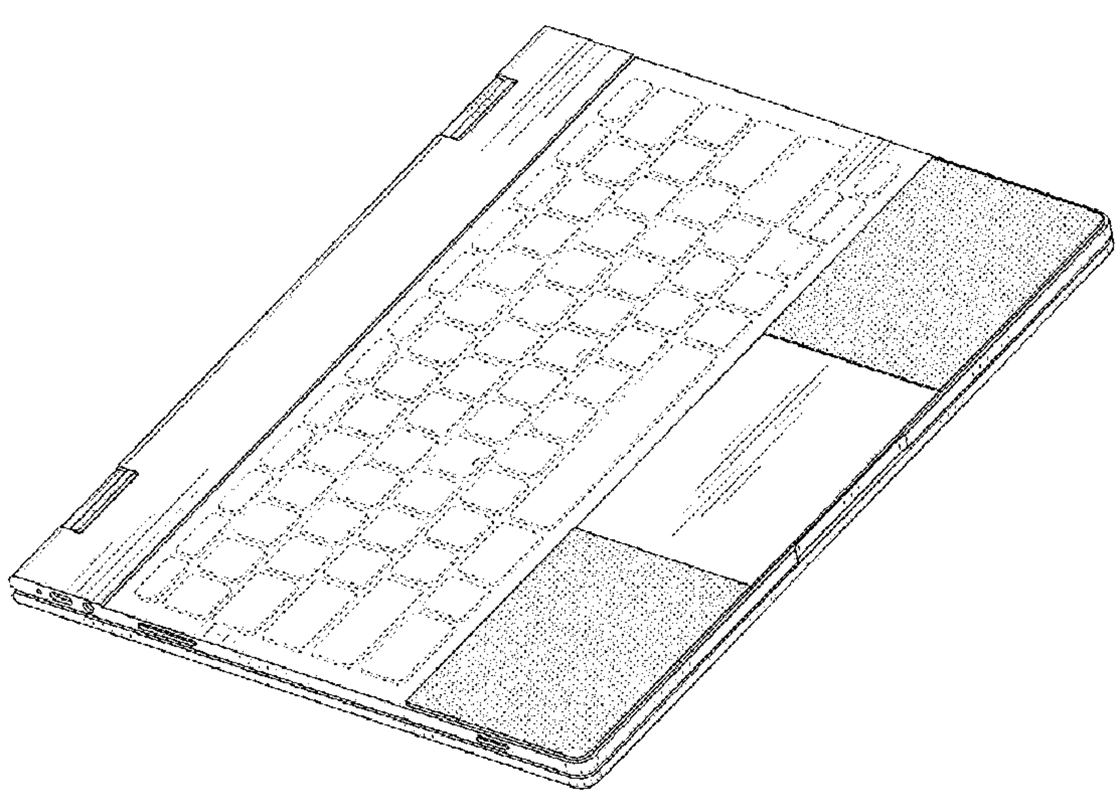

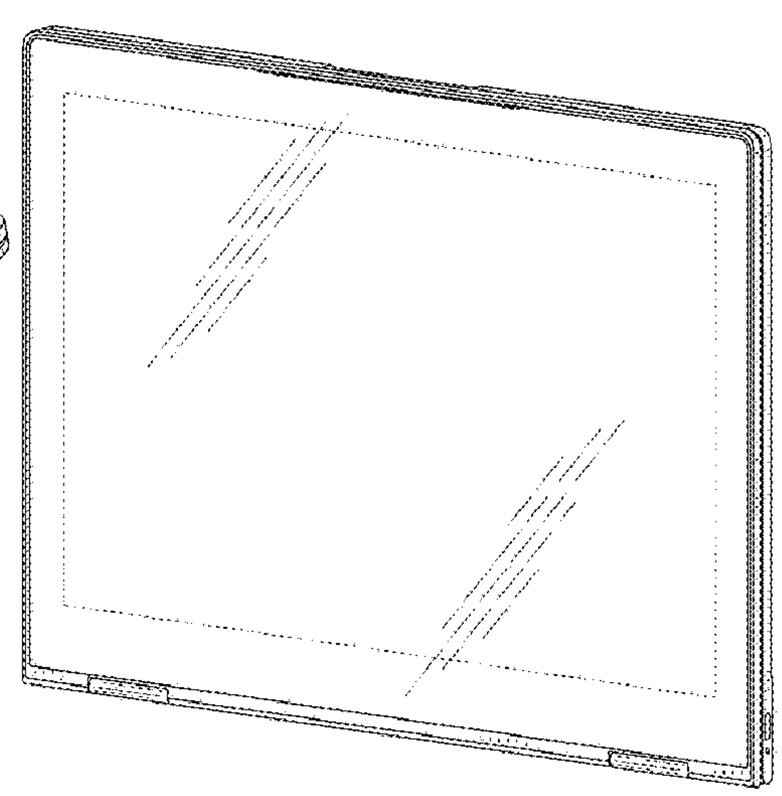

(58) **Field of Classification Search**
USPC D14/341–347; D6/308, 310; D10/50, 65, D10/104.1; D18/6–7; D19/26, 59–60; D21/324, 329–330, 332
CPC ... H04M 1/0202; H04M 1/0266; H04M 1/725
See application file for complete search history.

(56) **References Cited**

U.S. PATENT DOCUMENTS

D517,063	S		3/2006	Nakajima et al.	
D558,752	S	*	1/2008	Andre	D14/315
D572,247	S	*	7/2008	Andre	D14/315
D606,988	S		12/2009	Andre et al.	
D614,616	S	*	4/2010	Denhez	D14/315
D623,645	S		9/2010	Andre et al.	
7,898,525	B2		3/2011	Imamura	
D675,611	S	*	2/2013	Wen	D14/315
8,471,809	B2		6/2013	Seki et al.	
D686,613	S		7/2013	Bowers et al.	
D703,201	S	*	4/2014	Tian	D14/315
D705,772	S		5/2014	Bowers et al.	
D705,773	S		5/2014	Tian	
D717,296	S		11/2014	Oh et al.	
D723,539	S		3/2015	Andre et al.	
D727,892	S		4/2015	Bowers et al.	
D729,228	S		5/2015	Kawai	
D729,231	S		5/2015	Lam et al.	
D743,390	S	*	11/2015	Lyles	D14/315
D743,958	S		11/2015	Goh et al.	
D746,808	S		1/2016	Matsuoka	
D750,616	S		3/2016	Liang	
D756,350	S		5/2016	Sun et al.	
9,367,088	B2		6/2016	Chang et al.	
D776,653	S	*	1/2017	Akana	D14/318
D791,120	S		7/2017	Leonard et al.	
D799,487	S		10/2017	Nishizawa	
D807,345	S	*	1/2018	Senatori	D14/316
D813,859	S	*	3/2018	Oakley	D14/315
9,977,594	B2		5/2018	Huh	
D819,629	S	*	6/2018	Lee	D14/345
9,996,112	B2		6/2018	Chang et al.	
D842,856	S	*	3/2019	Lam	D14/345
D869,458	S	*	12/2019	Tzou	D14/317
D892,112	S	*	8/2020	Tu	D14/327
D894,895	S	*	9/2020	Tzou	D14/315
D914,012	S	*	3/2021	Lam	D14/327
D915,392	S	*	4/2021	Andre	D14/315
D915,393	S	*	4/2021	Lee	D14/316
D916,078	S	*	4/2021	Akana	D14/315
D916,079	S	*	4/2021	Akana	D14/315
D917,461	S	*	4/2021	DiLoreto	D14/327
D927,482	S	*	8/2021	Suzuki	D14/315
D928,773	S	*	8/2021	Lam	D14/327
2010/0091442	A1		4/2010	Theobald et al.	
2011/0255727	A1		10/2011	Azuchi	

FOREIGN PATENT DOCUMENTS

CN	304952055		*	12/2018
EM	001967969-0001			1/2012
EM	004534956-0003		*	3/2019
JP	4-44040	U		4/1992
JP	2010238046	A		10/2010
JP	1498275	S		5/2014
KR	3009678430005		*	8/2021

OTHER PUBLICATIONS

Samsung Galaxy Tab S6, date first available: Jul. 31, 2019, [retrieved Sep. 9, 2021], Retrieved from Internet, URL: <https://www.amazon.com/Samsung-Galaxy-256GB-Tablet-Cloud/dp/B07VFFC4FS/ref=asc_df_B07VFFC4FS/?tag=hyprod-20&linkCode=df0&hvadid%E2%80%A6> (Year: 2019).*

Google Pixelbook review:, Dec. 7, 2017, [retrieved Sep. 9, 2021], Retrieved from Internet, URL: <https://www.theguardian.com/technology/2017/dec/07/google-pixelbook-review-chromebook-computer-hardware> (Year: 2017).*

Review: Google Pixelbook, Oct. 26, 2017, [retrieved Sep. 9, 2021], Retrieved from Internet, URL: <https://www.wired.com/2017/10/review-google-pixelbook/> (Year: 2017).*

Pixelbook Review:, Aug. 4, 2018, [retrieved Sep. 9, 2021], Retrieved from Internet, URL: <https://www.forbes.com/sites/brookecrothers/2018/08/04/google-pixelbook-review-2018-macbook-pro-13-inch-review-price-specs-deals/?sh=57314c343add> (Year: 2018).*

Dell Passive Stylus for Inspiron 13. Dell, Inc. Published in 2016. 4 pages.

Flash: New and Notable Product Design. Design News. May 1, 2009. No. 1, vol. 64, p. 22.

HP Spectre X360 13-4193DX 2-in-1 13.3" QHD Touch Screen Laptop Intel Core i7-6500U 256GB SSD 8GB DDR3L Windows 10-Black/Gold (Certified Refurbished). Amazon.com. Published in 2016. 8 pages.

Huawei MateBook, p. 6 Cited in Notice of Grant dated Jul. 10, 2018 for Japanese Design Patent Application No. 2017-027183.

Nichiei Intec Barcode System, p. A-2. Cited in Notice of Grant dated Jul. 10, 2018 for Japanese Design Patent Application No. 2017-027183.

Notice of Allowance for Japanese Design Patent Application No. 2017-27489, dated Sep. 7, 2018.

Notice of Allowance for Japanese Design Patent Application No. 2017-27490, dated Sep. 7, 2018.

Notice of Allowance for Japanese Design Patent Application No. 2017-27491, dated Sep. 7, 2018.

Notice of Grant for Japanese Design Patent Application No. 2017-027183, dated Jul. 10, 2018. 3 pages.

Sony VAIO Fit 15A Debut. VIAO Standard Specification Model Catalog. Consumer Products Catalogs (Published between Jul. 2013 and Nov. 2013). 4 pages.

* cited by examiner

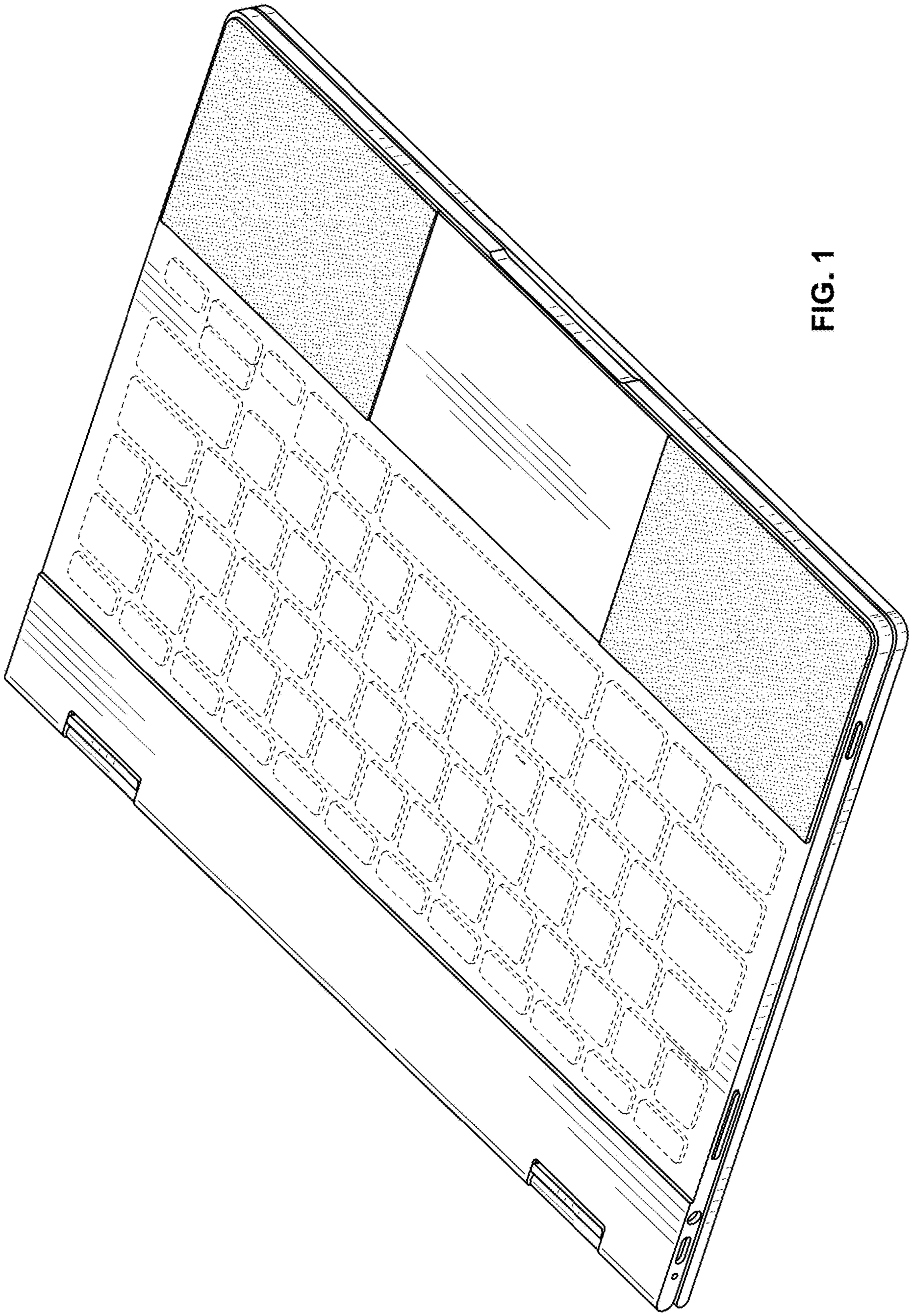

FIG. 1

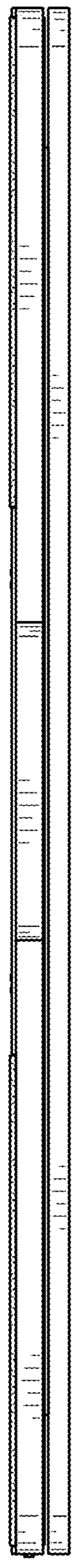

FIG. 2

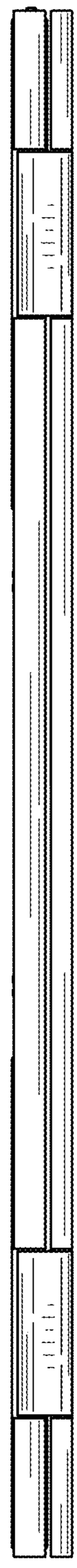

FIG. 3

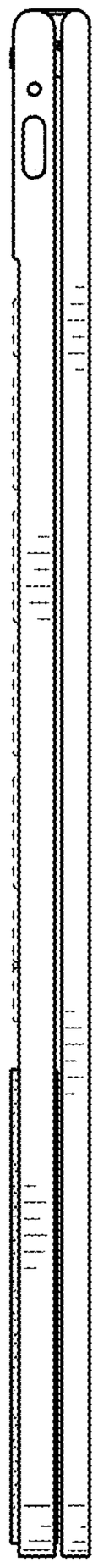

FIG. 4

FIG. 5

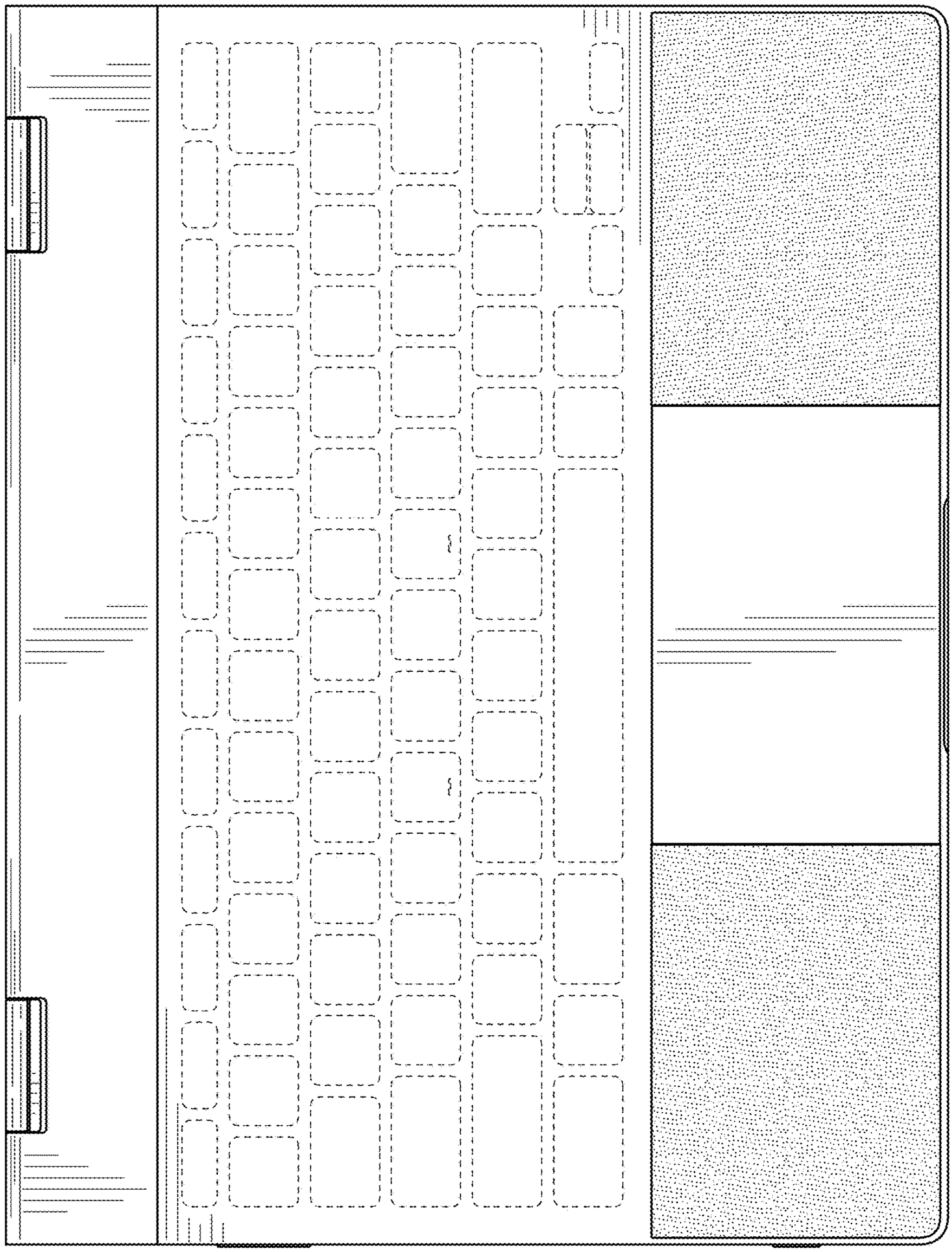

FIG. 6

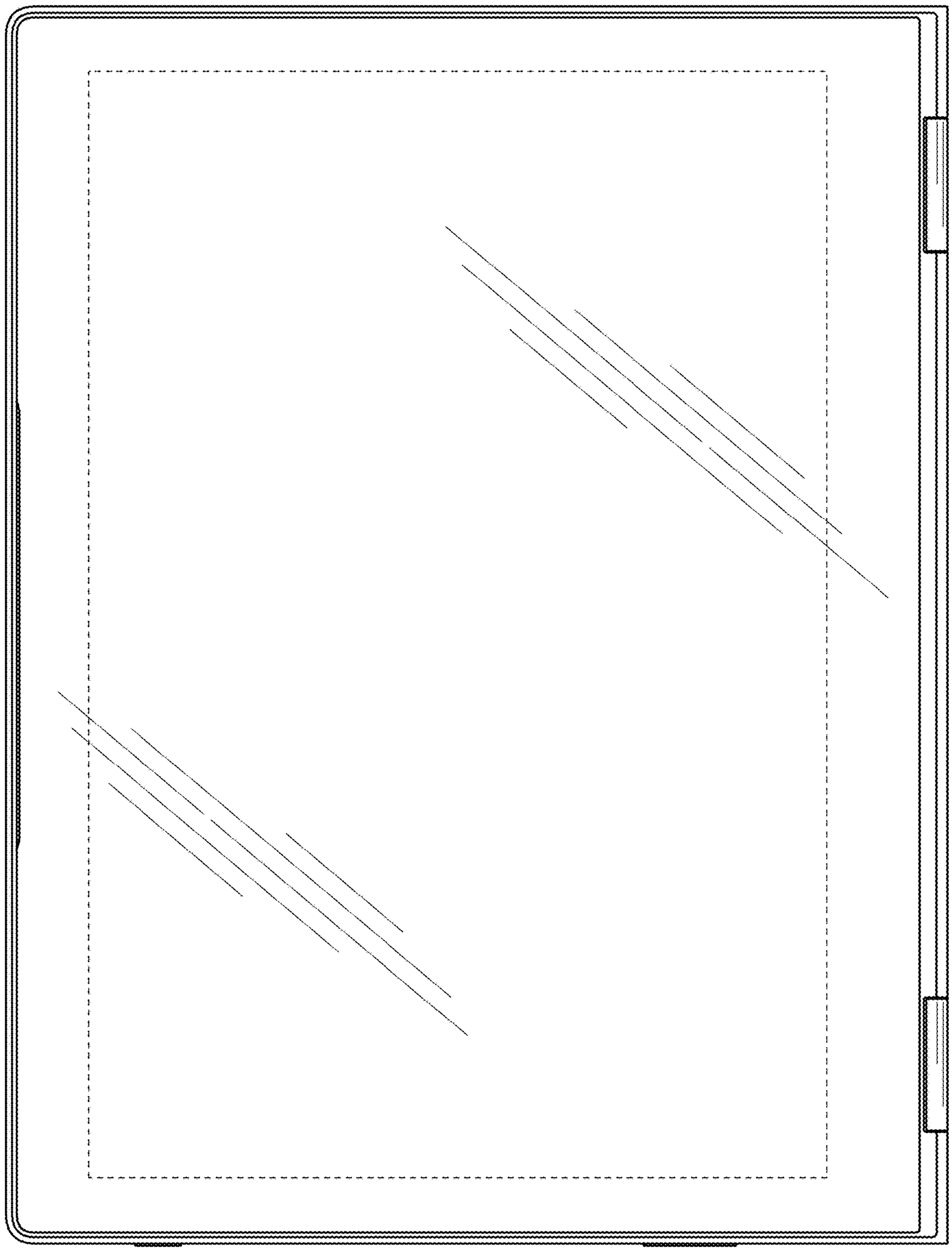

FIG. 7
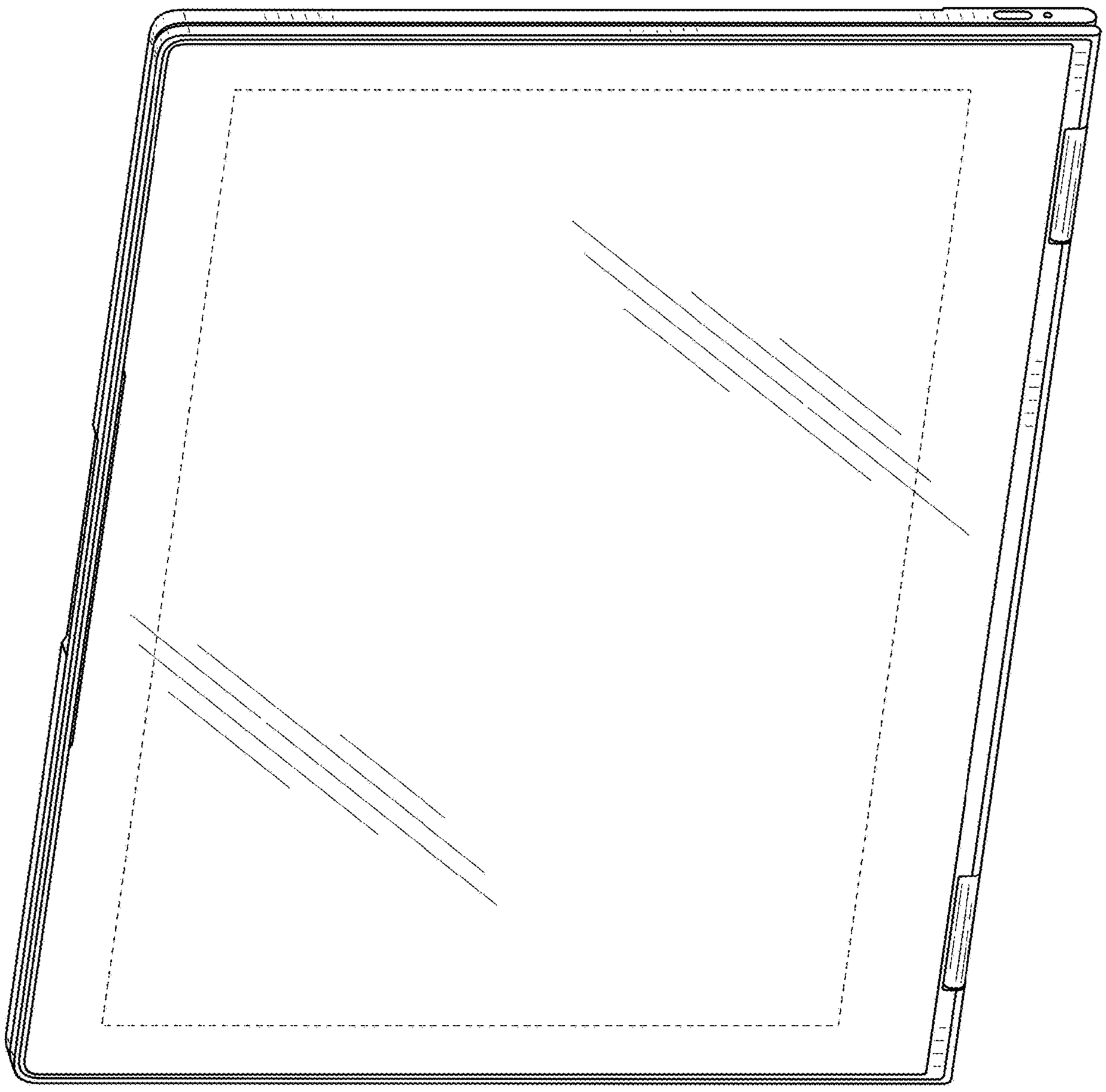
FIG. 8