US00D941760S

(12) United States Design Patent

Ryan et al.

(10) Patent No.: US D941,760 S
(45) Date of Patent: ** Jan. 25, 2022

(54) **WIRELESS CHARGING MOUNT**

(71) Applicant: **ANNEX PRODUCTS PTY. LTD.**, Prahran (AU)

(72) Inventors: **Leigh M. Ryan**, Sandringham (AU); **Christopher L. Peters**, Glen Iris (AU)

(73) Assignee: **ANNEX PRODUCTS PTY. LTD.**, South Yarra (AU)

(**) Term: **15 Years**

(21) Appl. No.: **29/724,034**

(22) Filed: **Feb. 12, 2020**

(51) **LOC (13) Cl.** **13-02**

(52) **U.S. Cl.**
USPC **D13/108**

(58) **Field of Classification Search**
USPC D13/103, 107–110, 118, 119, 184, 199; D14/251, 253, 432, 434
CPC Y02E 60/12; H02J 7/025; H02J 7/0042; H02J 7/0044; H02J 7/0045; H02J 7/0003; H02J 7/0027; H02J 7/0013; H02J 7/0054; H02J 7/00; H02J 3/32; H02J 3/008; H02J 2001/008; H01F 38/14; H01R 13/6675; H01M 2/1022; H01M 2/1055; H01M 10/44; H01M 10/46; H01M 10/425; B60R 16/03; B60L 11/1809; B60L 11/1861; B60L 11/182
See application file for complete search history.

(56) **References Cited**

U.S. PATENT DOCUMENTS

D548,688	S	*	8/2007	Fee	D13/107
D662,065	S	*	6/2012	Cook	D13/168
D666,175	S	*	8/2012	Yamada	D14/218
D666,176	S	*	8/2012	Yamada	D14/218
9,243,739	B2	*	1/2016	Peters	F16M 13/00
D813,239	S	*	3/2018	Akana	D14/432
D825,549	S	*	8/2018	Lebovitz	D14/253
D832,276	S	*	10/2018	Miles	D14/451
D850,370	S	*	6/2019	Lee	D13/108
D852,681	S	*	7/2019	Peters	D12/114
D860,190	S	*	9/2019	Liao	D14/253
D876,316	S	*	2/2020	Peters	D12/415
D882,560	S	*	4/2020	Liao	D14/253
D883,271	S	*	5/2020	Liao	D14/253
D883,922	S	*	5/2020	Peters	D13/108
D900,733	S	*	11/2020	Roberts	D13/108
D906,958	S	*	1/2021	Fitzgerald	D13/108
D906,959	S	*	1/2021	Turksu	D13/108
D911,955	S	*	3/2021	Turksu	D13/108

(Continued)

Primary Examiner — Christy Nemeth
(74) *Attorney, Agent, or Firm* — Barnes & Thornburg LLP

(57) **CLAIM**

We claim the ornamental design for a wireless charging mount, as shown and described.

DESCRIPTION

FIG. **1** is a top perspective view of a wireless charging mount in accordance with our new design;
FIG. **2** is a bottom perspective view of the wireless charging mount of FIG. **1**;
FIG. **3** is a top plan view of the wireless charging mount of FIG. **1**;
FIG. **4** is a bottom plan view of the wireless charging mount of FIG. **1**;
FIG. **5** is a rear elevation view of the wireless charging mount of FIG. **1**;
FIG. **6** is a front elevation view of the wireless charging mount of FIG. **1**;
FIG. **7** is a left-side elevation view of the wireless charging mount of FIG. **1**; and,
FIG. **8** is a right-side elevation view of the wireless charging mount of FIG. **1**.
The broken lines depict portions of the wireless charging mount that form no part of the claimed design.

1 Claim, 8 Drawing Sheets

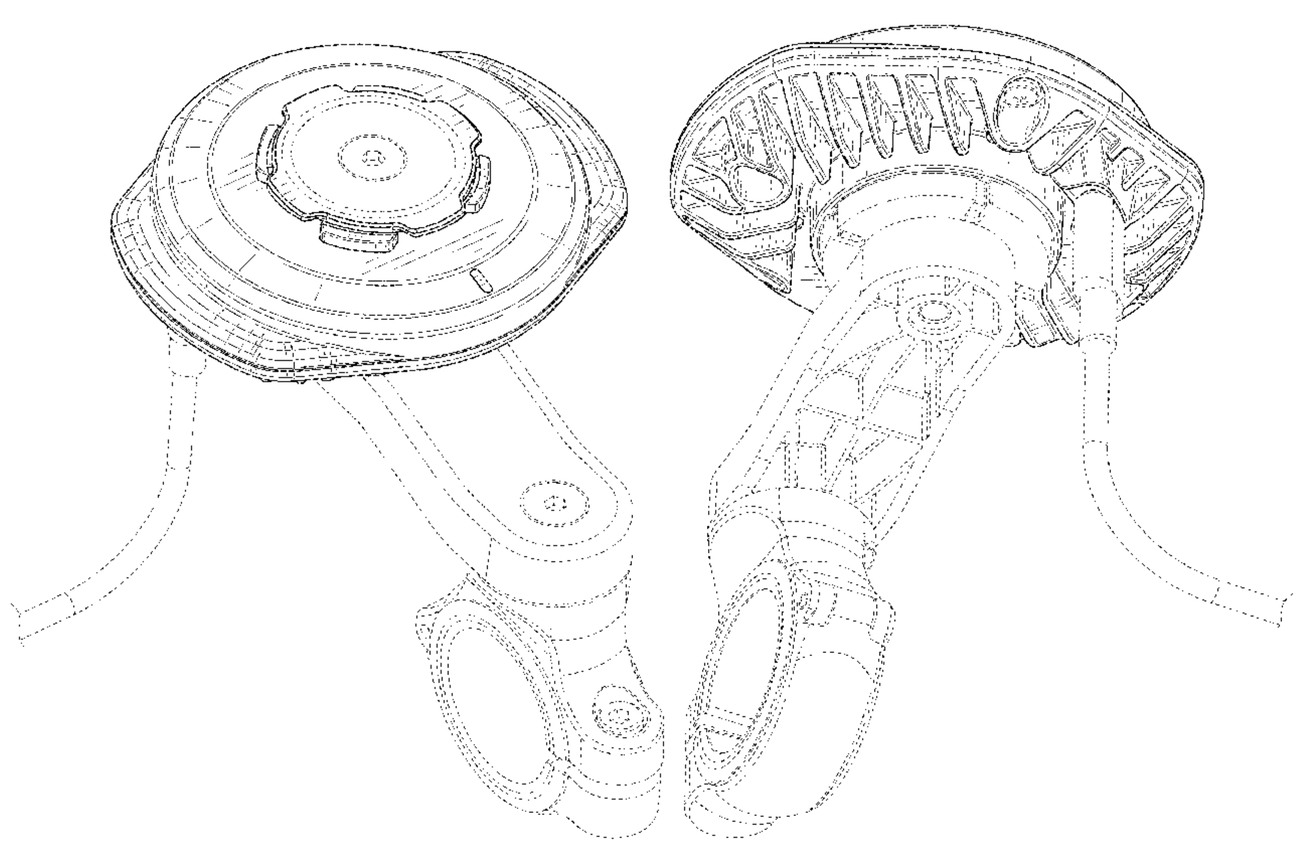

(56) **References Cited**

U.S. PATENT DOCUMENTS

D913,224	S	*	3/2021	Kim	D13/108
D918,135	S	*	5/2021	Akana	D13/108
D921,581	S	*	6/2021	Bao	D13/107
2013/0318775	A1	*	12/2013	Peters	A45F 5/00 29/592.1

* cited by examiner

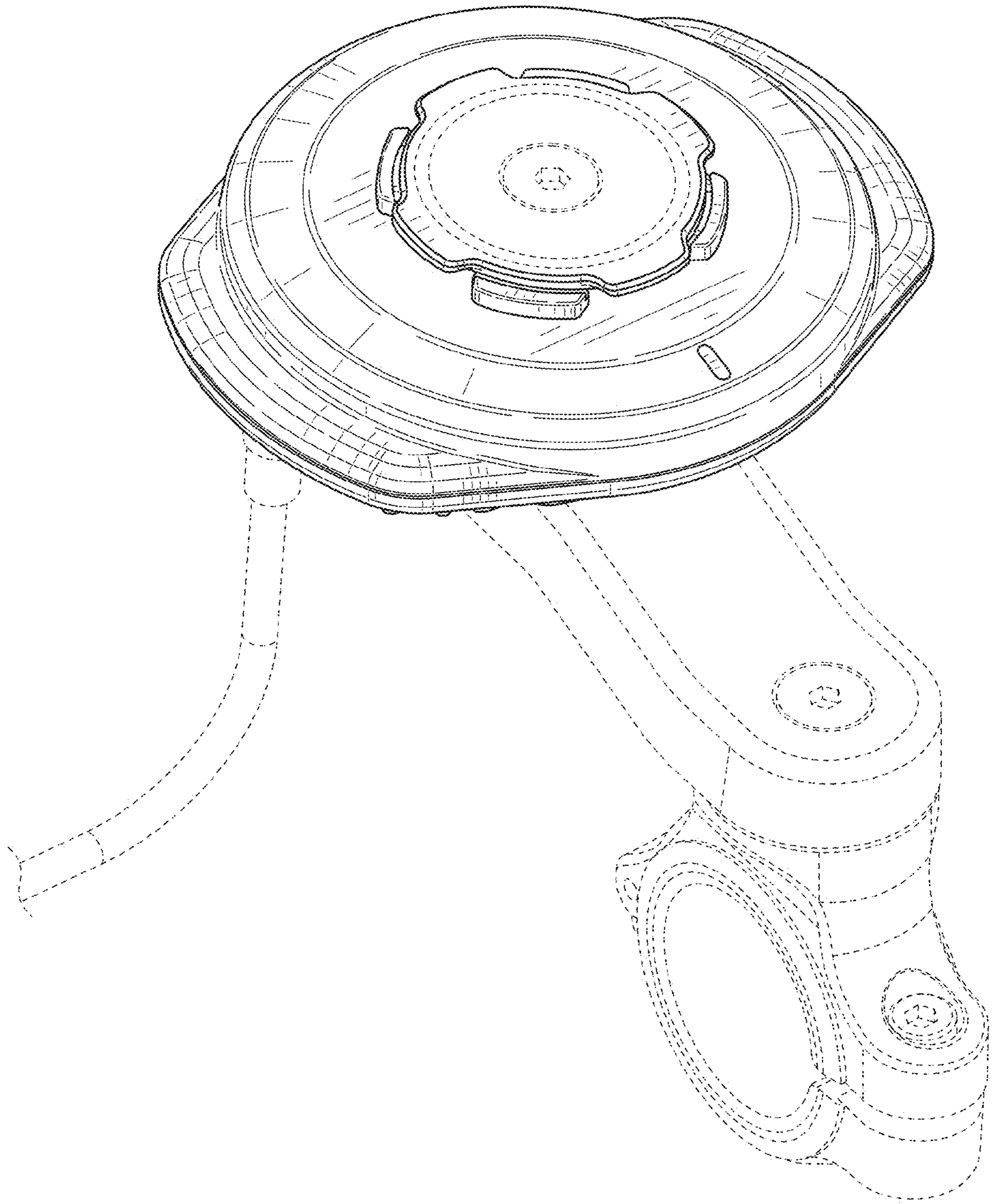

FIG. 1

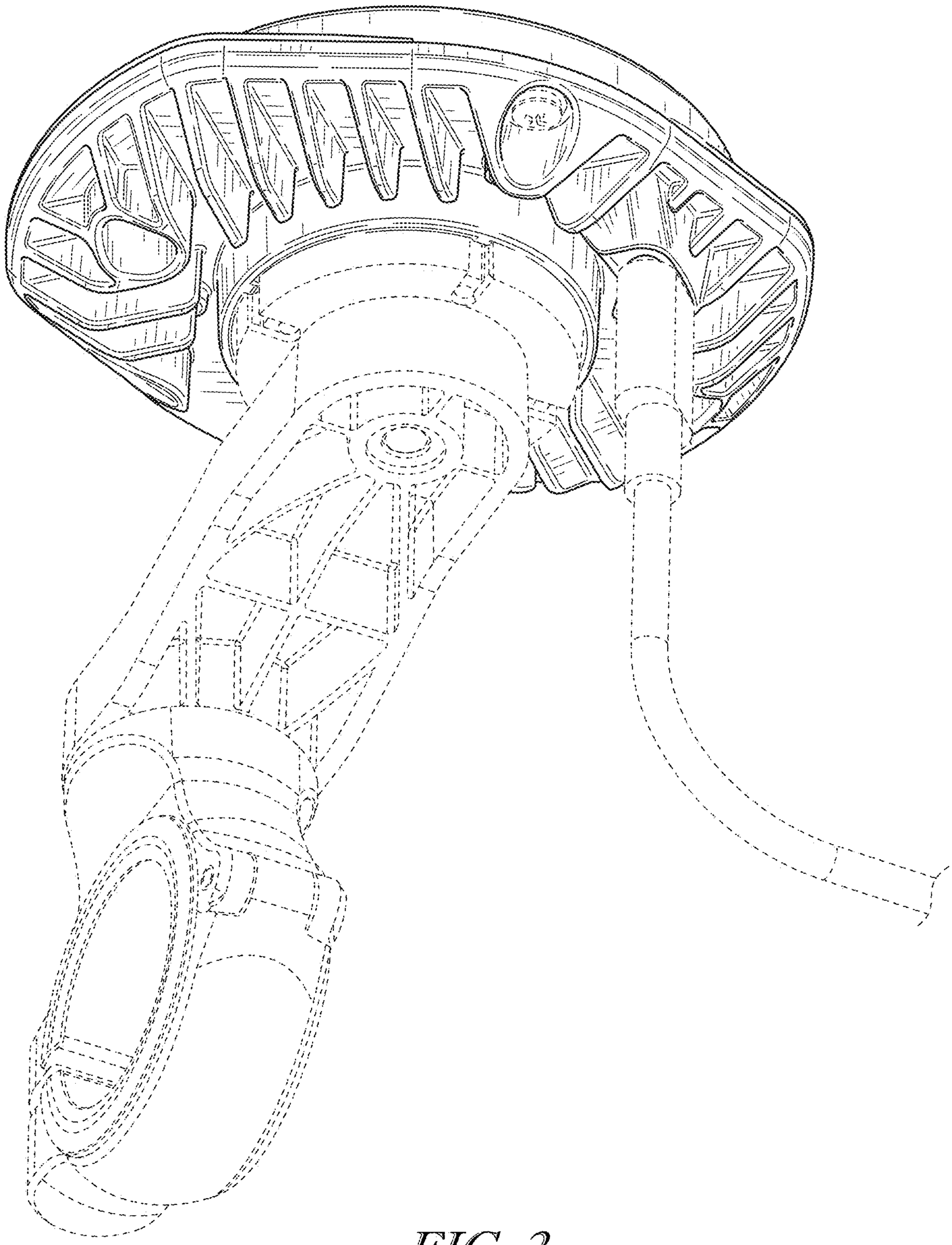

FIG. 2

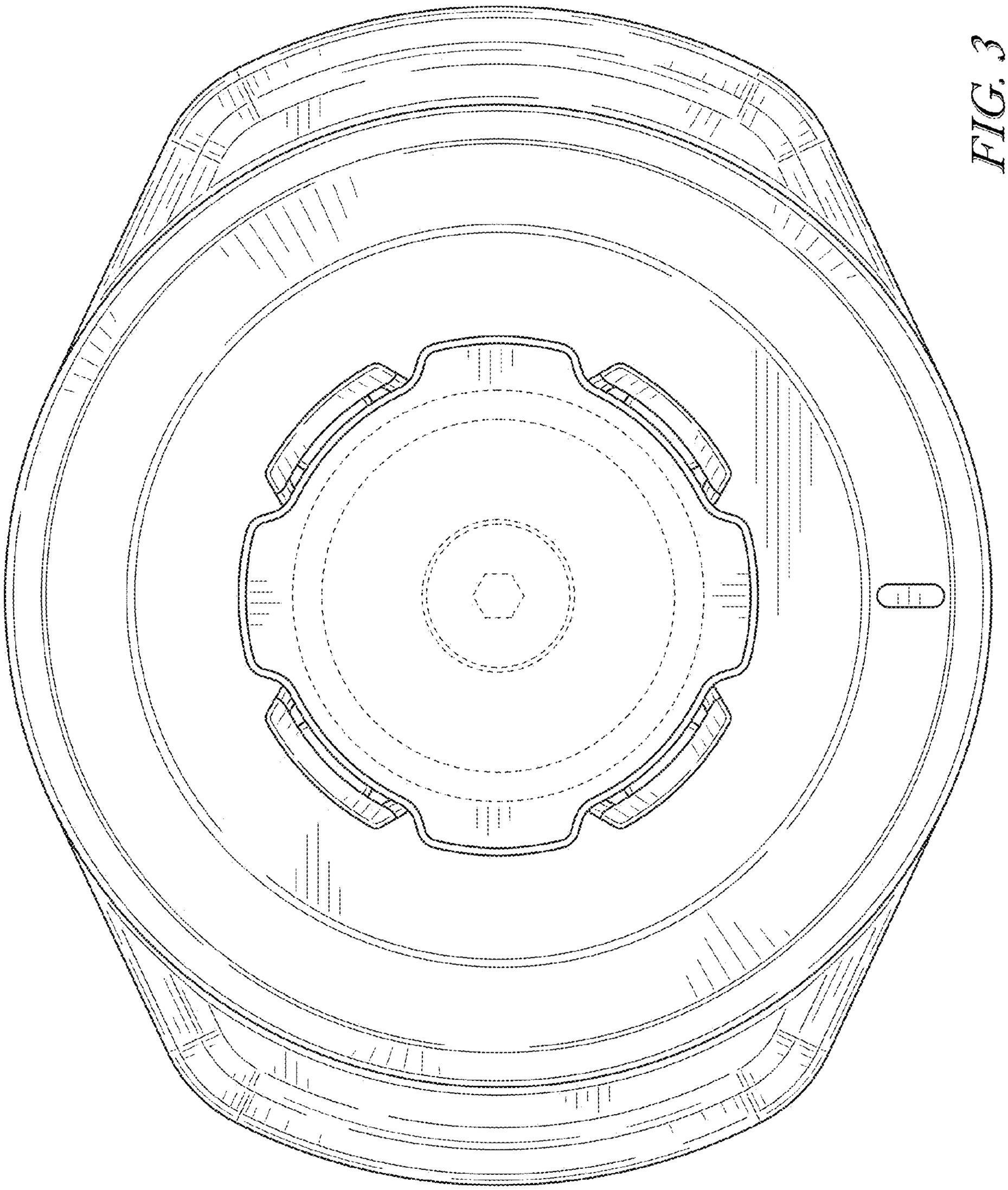

FIG. 3

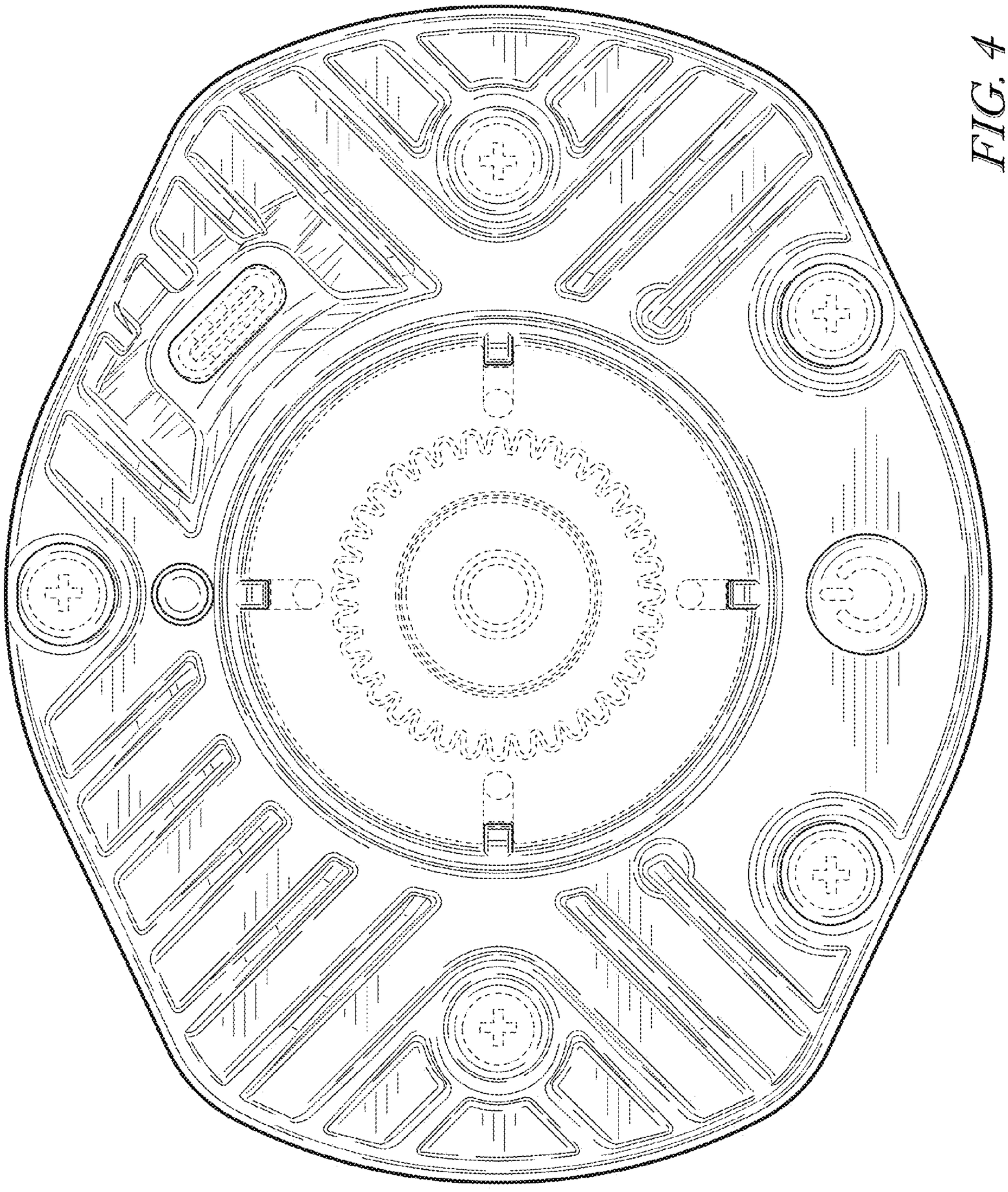

FIG. 4

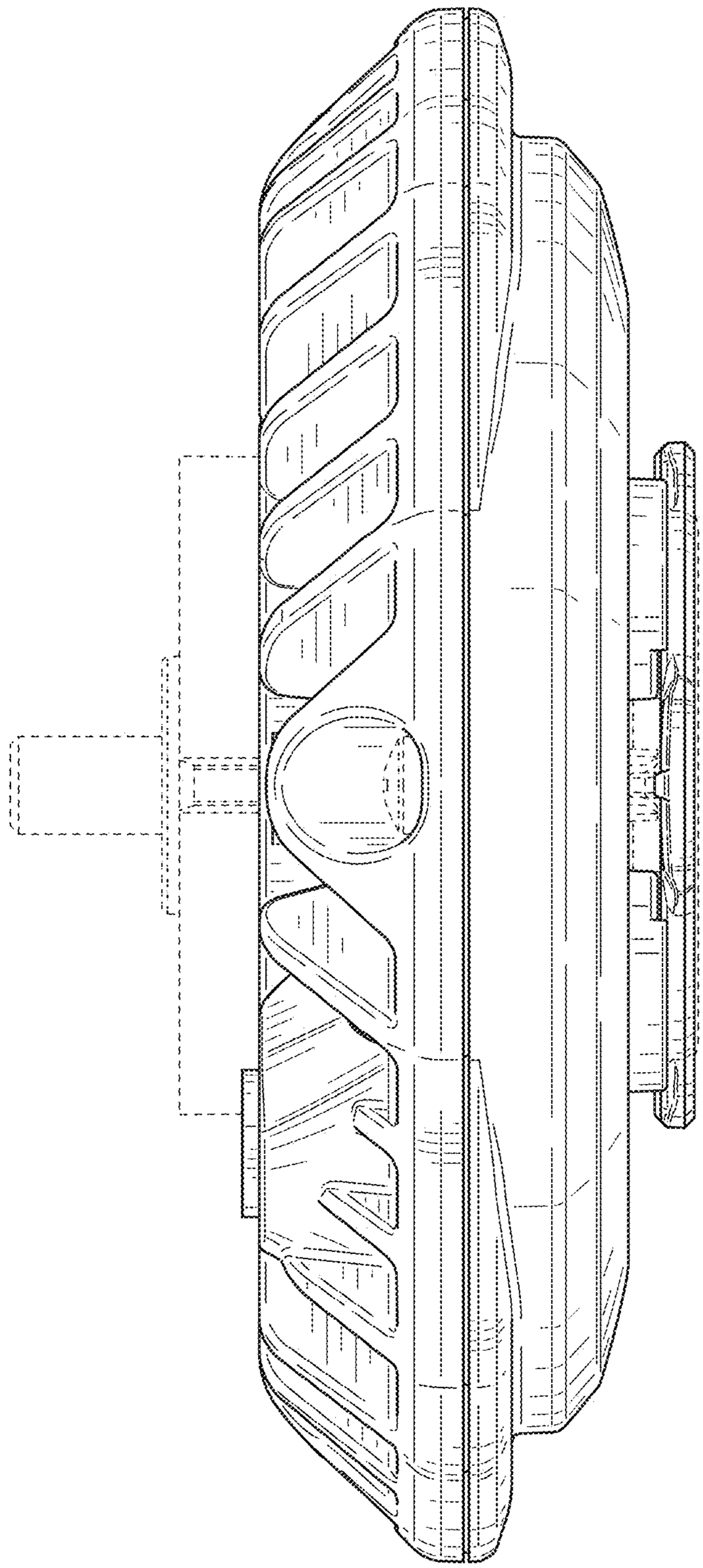

FIG. 5

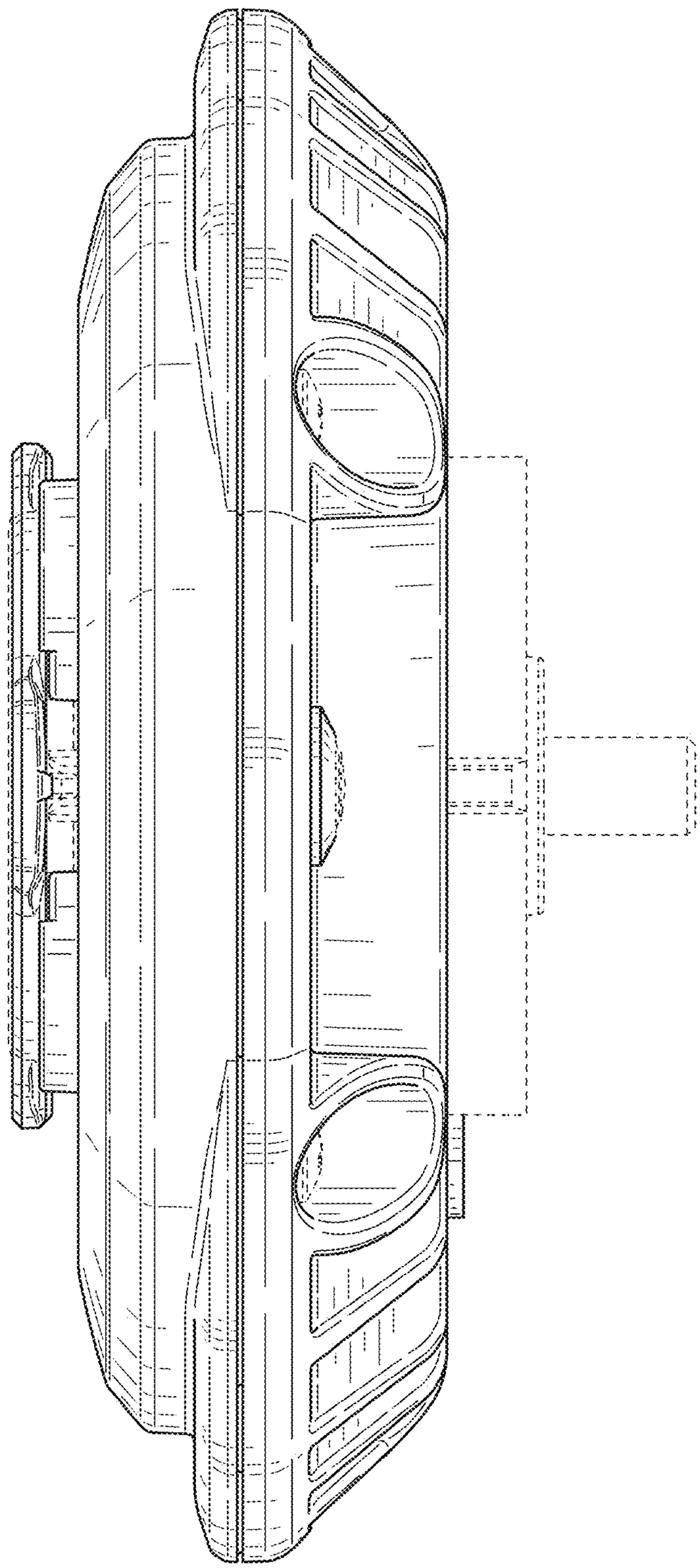

FIG. 6

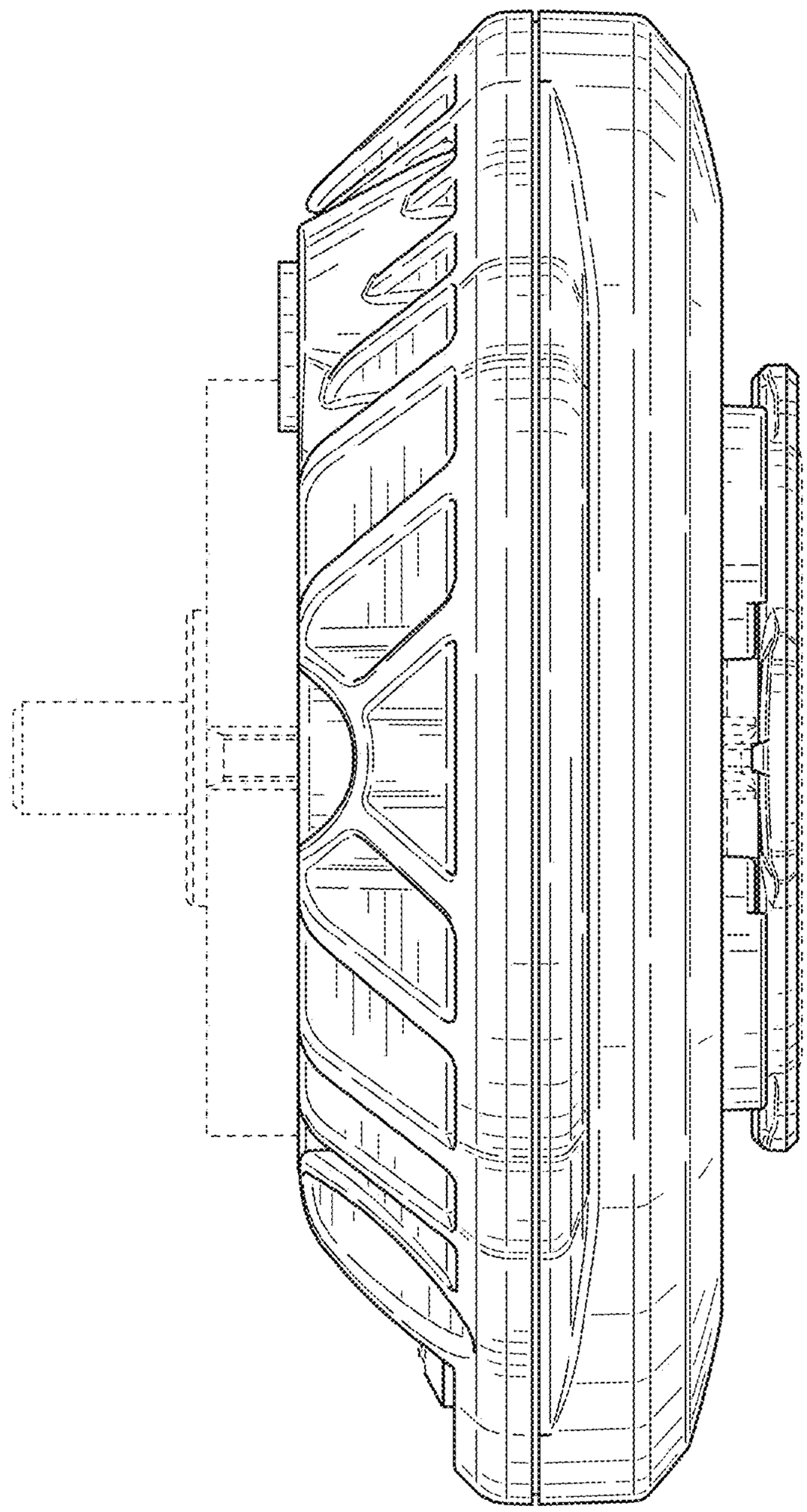

FIG. 7

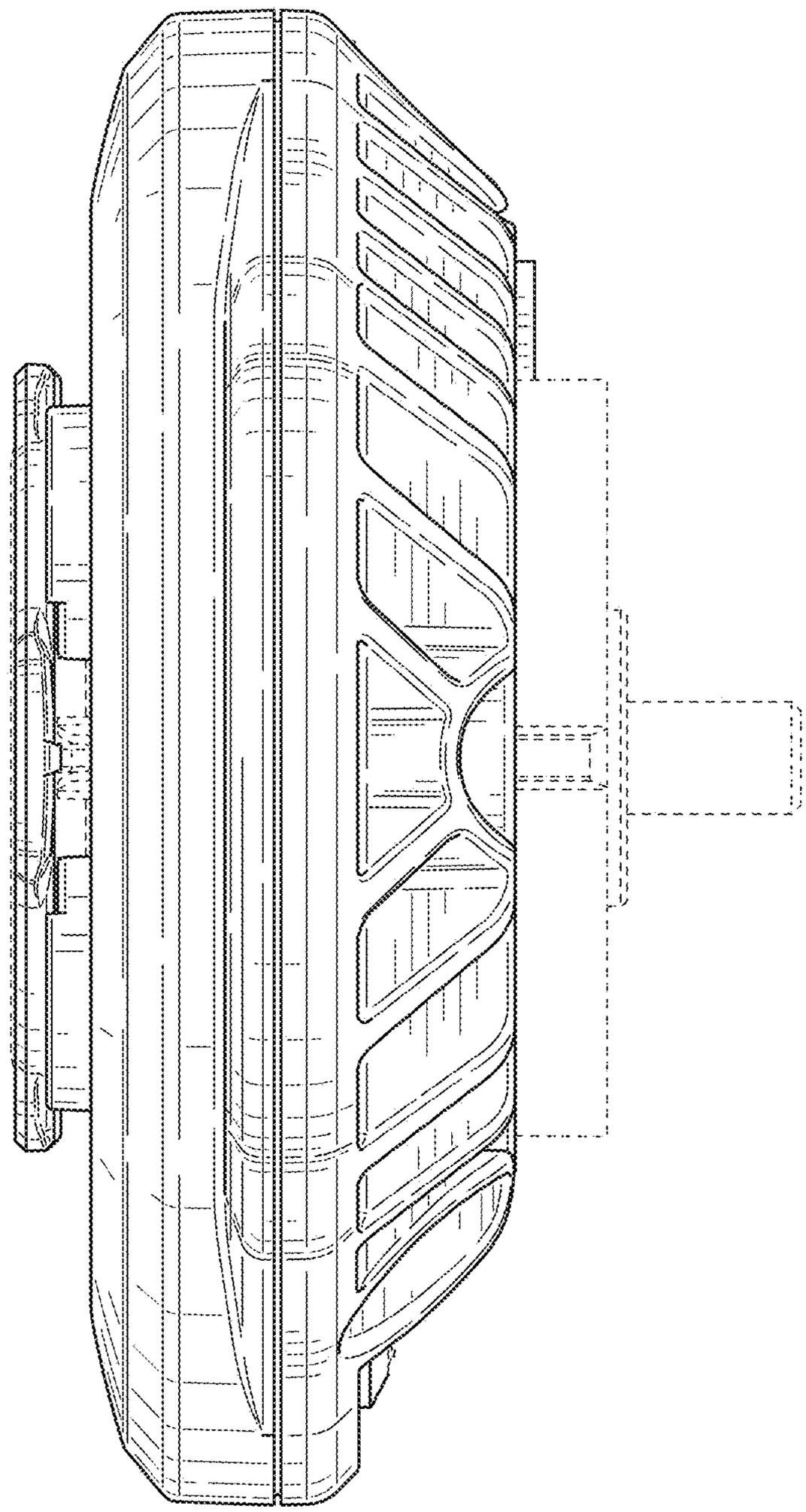

FIG. 8