US00D939442S

(12) **United States Design Patent**
Soward et al.

(10) **Patent No.: US D939,442 S**
(45) **Date of Patent: ** Dec. 28, 2021**

(54) **ELECTRICAL CONNECTOR FOR A MODEL VEHICLE**

(71) Applicant: **TRAXXAS LP**, McKinney, TX (US)

(72) Inventors: **Terry Soward**, Van Alstyne, TX (US); **Jonathan Scott Wood**, Frisco, TX (US); **Kent Poteet**, Lucas, TX (US); **Otto Karl Allmendinger**, Rowlett, TX (US)

(73) Assignee: **TRAXXAS LP**, McKinney, TX (US)

(**) Term: **15 Years**

(21) Appl. No.: **29/728,072**

(22) Filed: **Mar. 16, 2020**

(51) **LOC (13) Cl.** **13-02**

(52) **U.S. Cl.**
USPC **D13/120**

(58) **Field of Classification Search**
USPC D8/395; D13/102–106, 110, 119–121, D13/184, 199, 133, 154, 156
CPC H01R 11/24; H01R 11/281; H01R 11/282; H01R 11/286
See application file for complete search history.

(56) **References Cited**

U.S. PATENT DOCUMENTS

2,121,338	A	6/1938	Chirelstein
2,203,122	A	6/1940	Anderson
D179,946	S	3/1957	Kerr
2,838,739	A	6/1958	Winkler
3,091,746	A	5/1963	Winkler
3,145,067	A	8/1964	Mishelevich et al.
3,218,599	A	11/1965	Winkler
3,233,211	A	2/1966	Smith
3,259,870	A	7/1966	Winkler
3,794,957	A	2/1974	Winkler

(Continued)

FOREIGN PATENT DOCUMENTS

DE	704450	C	3/1941
EP	0318831	A2	6/1989
FR	1036107		9/1953

OTHER PUBLICATIONS

Clarke, Brooke; "Power Pole"; web page article; Brooke, Clarke, Ukiah CA, U.S.A., 2003-2006.

(Continued)

Primary Examiner — Jennifer O King
(74) *Attorney, Agent, or Firm* — Daryl R. Wright; Greg Carr

(57) **CLAIM**

We claim the ornamental design for an electrical connector for a model vehicle, as shown and described.

DESCRIPTION

FIG. **1** is an upper, left, front perspective view of an electrical connector for a model vehicle showing our new design;
FIG. **2** is a front elevation view thereof;
FIG. **3** is a left side elevation view thereof;
FIG. **4** is a right side elevation view thereof;
FIG. **5** is a rear elevation view thereof;
FIG. **6** is an upper plan view thereof;
FIG. **7** is a bottom plan view thereof;
FIG. **8** is an upper, right, rear perspective view thereof; and,
FIG. **9** is an upper, left, front perspective environmental use view of the electrical connector for a model vehicle.
In the drawings, the broken lines illustrate portions of the electrical connector for a model vehicle that form no part of the claimed design; whereas, the additional broken lines in the environmental use drawing also form no part of the claimed design and are provided for the purposes of illustrating environmental use, structure, and context.

1 Claim, 7 Drawing Sheets

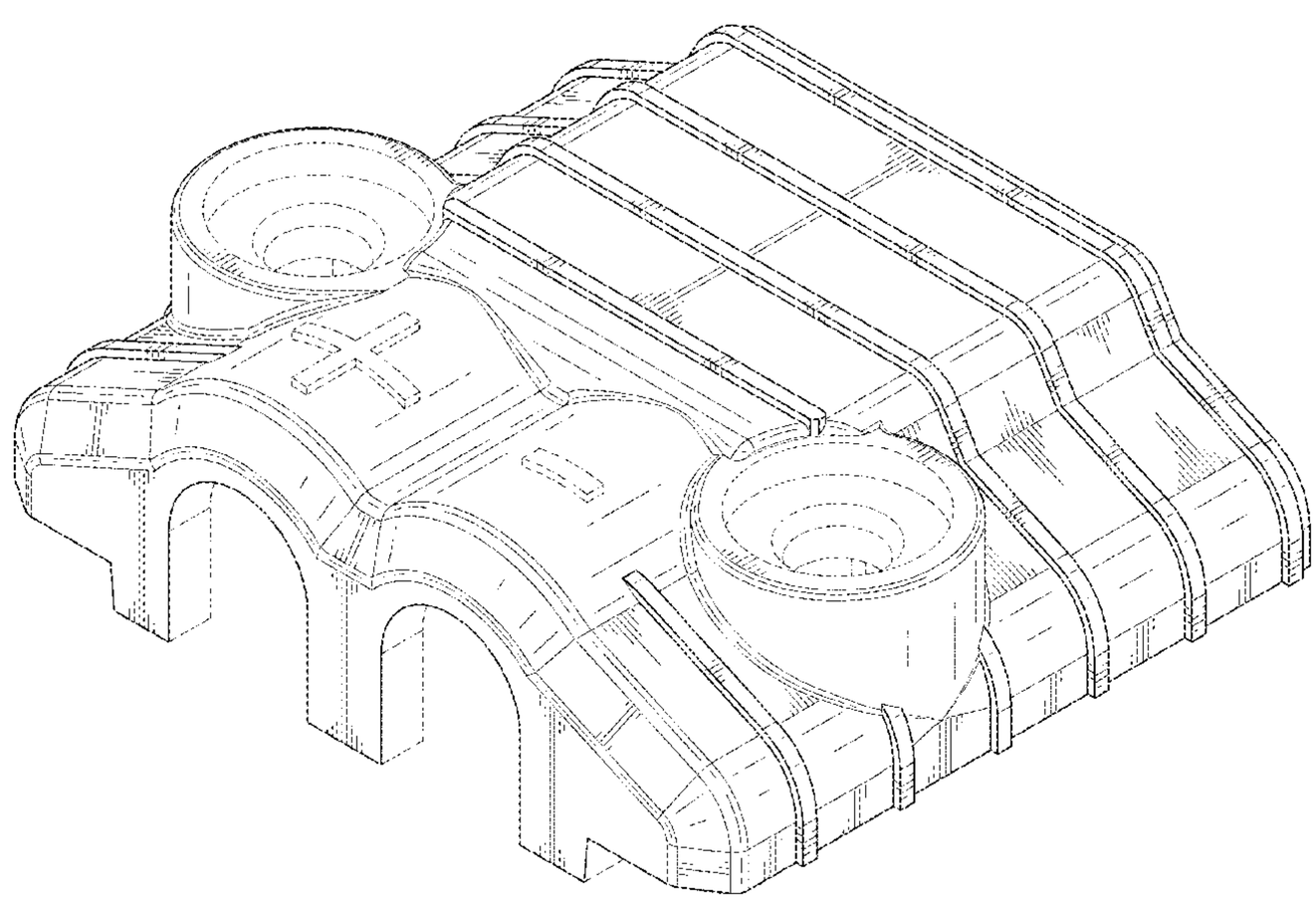

(56) **References Cited**

U.S. PATENT DOCUMENTS

4,018,497	A	4/1977	Bulanchuk	
4,083,617	A	4/1978	Wyatt	
D258,429	S	3/1981	Buckler	
4,342,498	A	8/1982	Patton et al.	
4,630,876	A	12/1986	Grunberg et al.	
4,846,729	A	7/1989	Hikami et al.	
4,990,099	A	2/1991	Marin et al.	
D326,642	S	6/1992	Lowe	
5,123,071	A	6/1992	Mulholland et al.	
5,293,581	A	3/1994	DiMarco	
5,533,915	A	7/1996	Deans	
5,575,674	A	11/1996	Davis et al.	
5,748,821	A	5/1998	Schempp et al.	
D430,542	S	9/2000	Hoferitza et al.	
6,240,228	B1	5/2001	Chen et al.	
6,268,564	B1	7/2001	Miyakoshi	
6,318,904	B1	11/2001	Reichle	
D467,553	S	12/2002	Cheng	
6,488,546	B2	12/2002	Sakurai et al.	
6,619,995	B1	9/2003	Hayashi et al.	
6,619,996	B2	9/2003	Hara et al.	
6,623,309	B2	9/2003	Sakurai et al.	
6,645,003	B2	11/2003	Yoshida et al.	
6,761,488	B2	7/2004	Weigel	
D494,933	S	8/2004	Lu	
7,004,795	B2	2/2006	Mancini et al.	
D552,560	S	10/2007	Victor	
7,325,980	B2	2/2008	Pepe	
7,374,460	B1	5/2008	Hariharesan et al.	
D573,536	S	7/2008	Hariharesan et al.	
D576,557	S	9/2008	Hariharesan et al.	
D577,671	S	9/2008	Schnitzler	
D589,881	S	4/2009	Kok et al.	
D642,528	S *	8/2011	Gravolin	D13/133
D659,640	S	5/2012	Tseng	
D662,889	S	7/2012	Smith	
D665,748	S	8/2012	Baker et al.	
8,491,341	B2 *	7/2013	Bower	H01R 24/28 439/638
D743,338	S *	11/2015	Christensen	D13/133
D743,339	S *	11/2015	Christensen	D13/133
D801,271	S *	10/2017	Tanaka	D13/133
10,027,146	B2 *	7/2018	Christensen	H02J 7/0068
D830,966	S *	10/2018	Siminoff	D13/103
D836,549	S *	12/2018	Kim	D13/110
D837,734	S *	1/2019	Vinciarelli	D13/110
D851,032	S *	6/2019	Santos	D13/103
D860,131	S *	9/2019	Siminoff	D13/103
D913,212	S *	3/2021	Ouyang	D13/103
2009/0311919	A1 *	12/2009	Smith	H01R 11/281 439/759
2011/0003512	A1	1/2011	Bower et al.	
2015/0126075	A1	5/2015	Chen et al.	
2018/0102599	A1 *	4/2018	Onoda	H01R 11/281

OTHER PUBLICATIONS

Anderson Power Products; "PP15 Powerpole Connector" data sheet; Anderson Power Products, Sterling, MA, U.S.A.

Anderson Power Products; "SB Connector Family" data sheet; Anderson Power Products, Sterling, MA, U.S.A.

Anderson Power Products; "SB 50 Connector" data sheet; Anderson Power Products, Sterling, MA, U.S.A.

Anderson Power Products; "SBS 50 Connector" data sheet; Anderson Power Products, Sterling, MA, U.S.A.

Horizon Hobby; "E-flite EC3 Device & Battery Connector, Male-Female" web page; Horizon Hobby, Inc., Champaign, IL, U.S.A. 2006.

Tyco Electronics, "Hot Plug, High Current Dual Crown Clip Socket Connector" ELCON Products International Co., Fremont, CA U.S.A 2000-2001.

McMaster-Carr; "Quick-Disconnect Terminals" catalog p. 724; McMaster-Carr Supply Co.

Molex; "Standard .093" web pages; Molex, Lisle IL U.S.A.

Hyperphysics; "Household Wiring—Polarized Receptables" web page article; http://hyperphysics.phyastr.gsu.edu/hbase/electric/hsehld.html.

Traxxas; "REVO transmission" illustration (1 page); Traxxas LP, Plano TX U.S.A.

Deans; "Ultra Plug" photographs (3 pages); Wm. F. Deans, Paramount CA U.S.A.

Molex; "Standard .093" connector photographs (7 pages); Molex, Lisle IL U.S.A.

"Standard 110V electrical plugs and receptacles" photographs (5 pages).

* cited by examiner

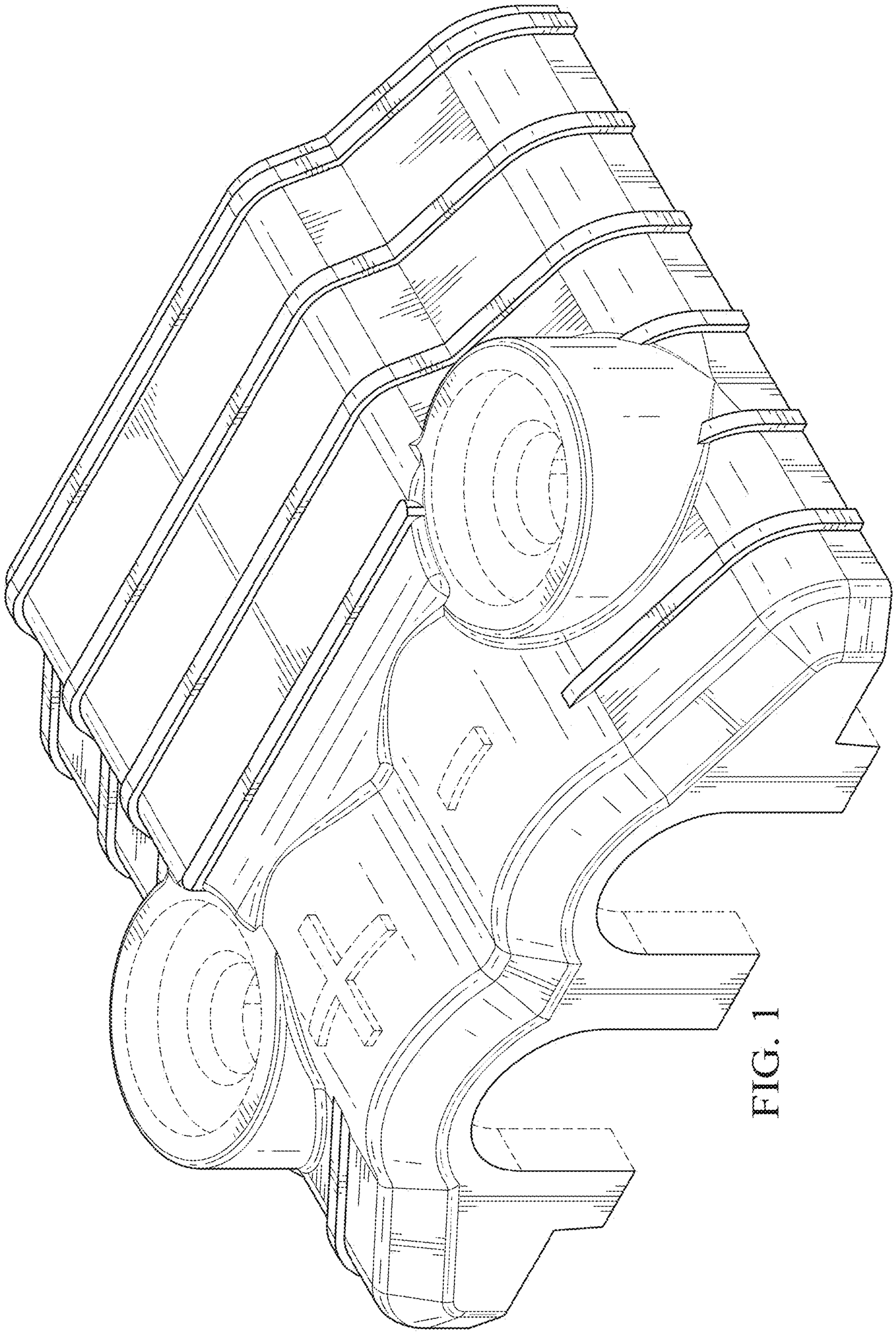

FIG. 1

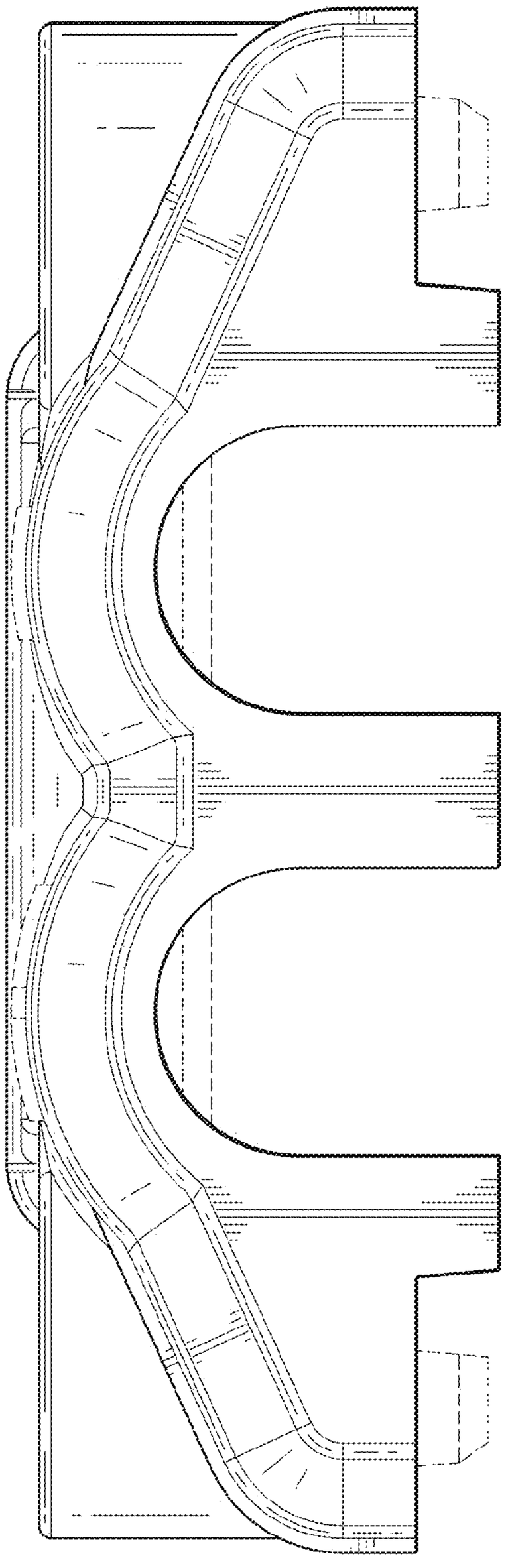

FIG. 2

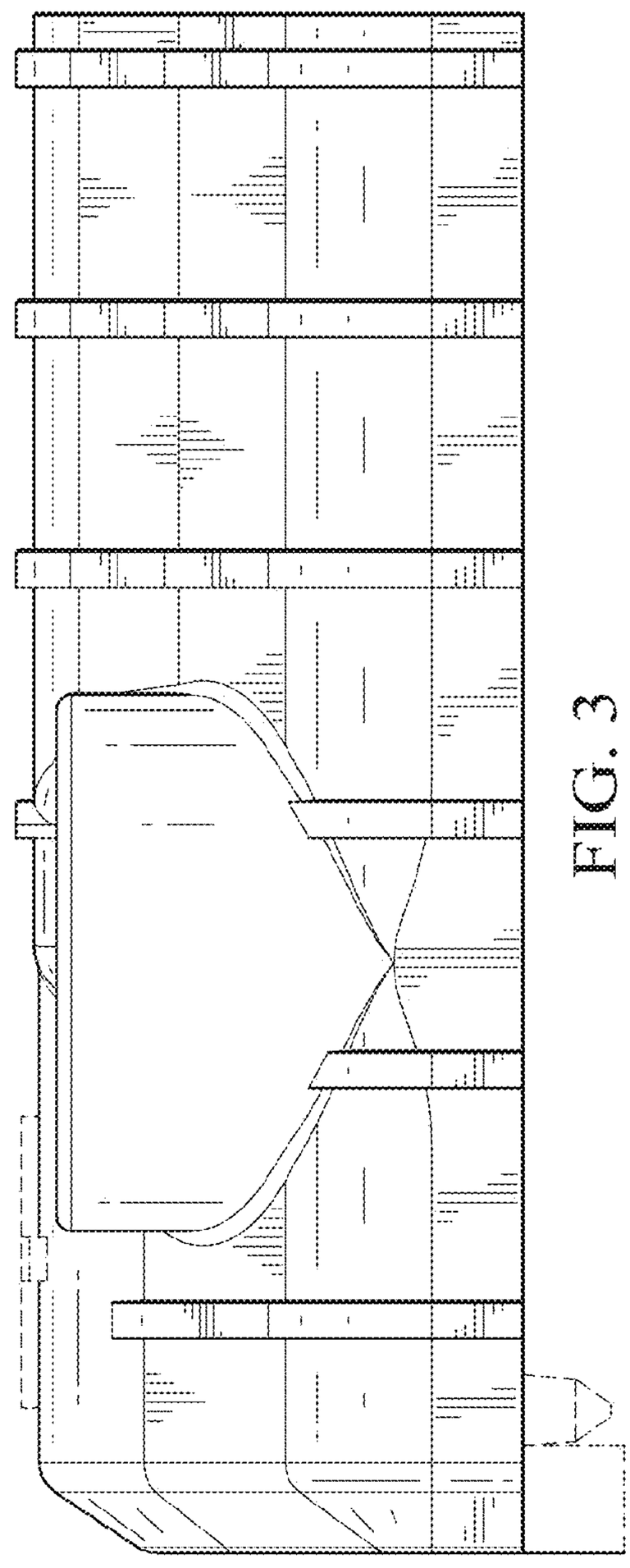

FIG. 3

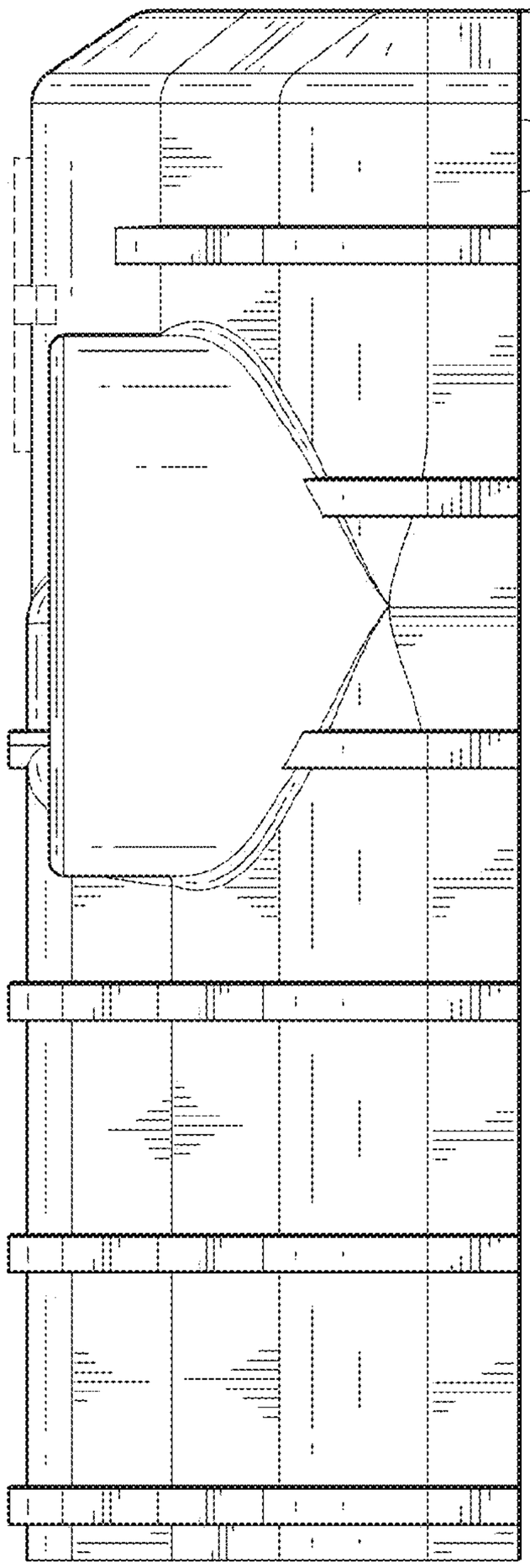

FIG. 4

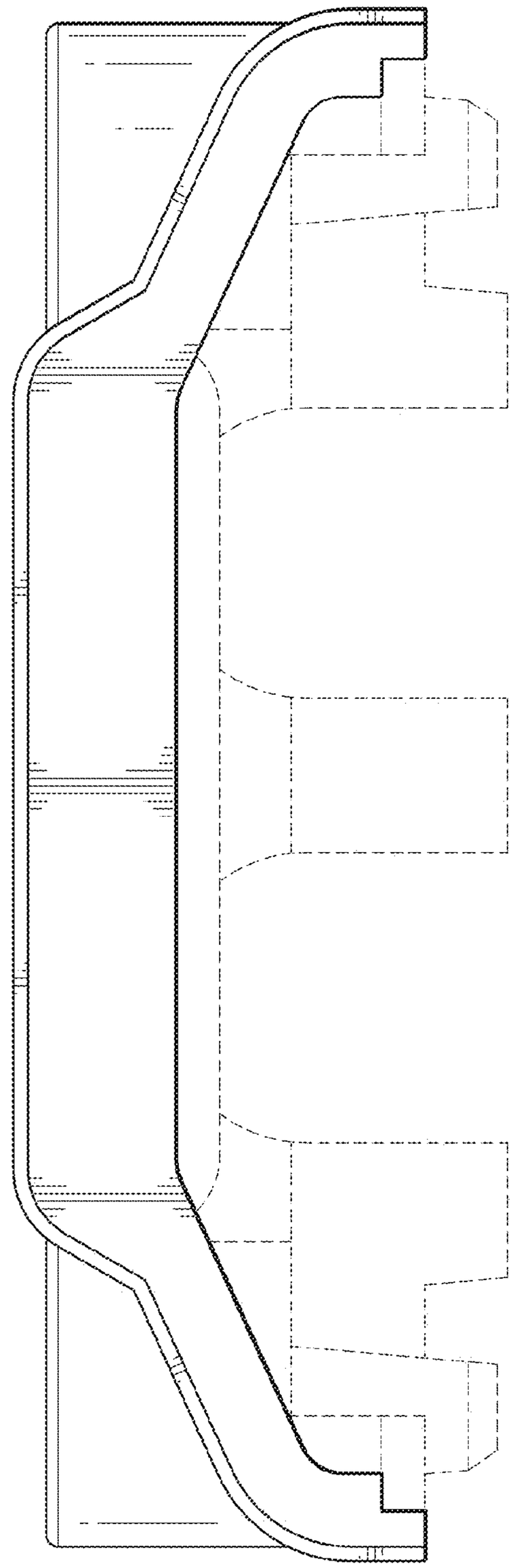

FIG. 5

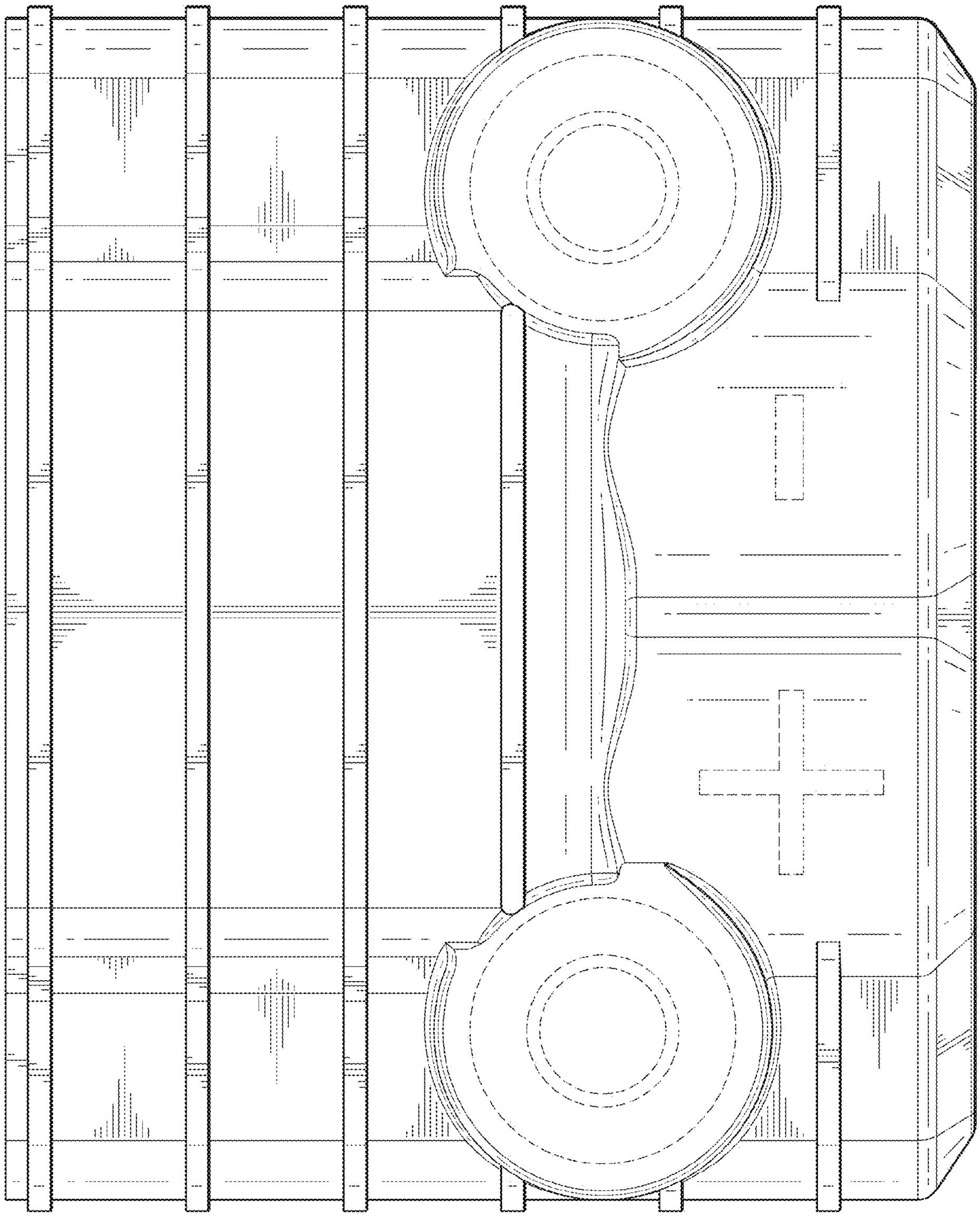

FIG. 6

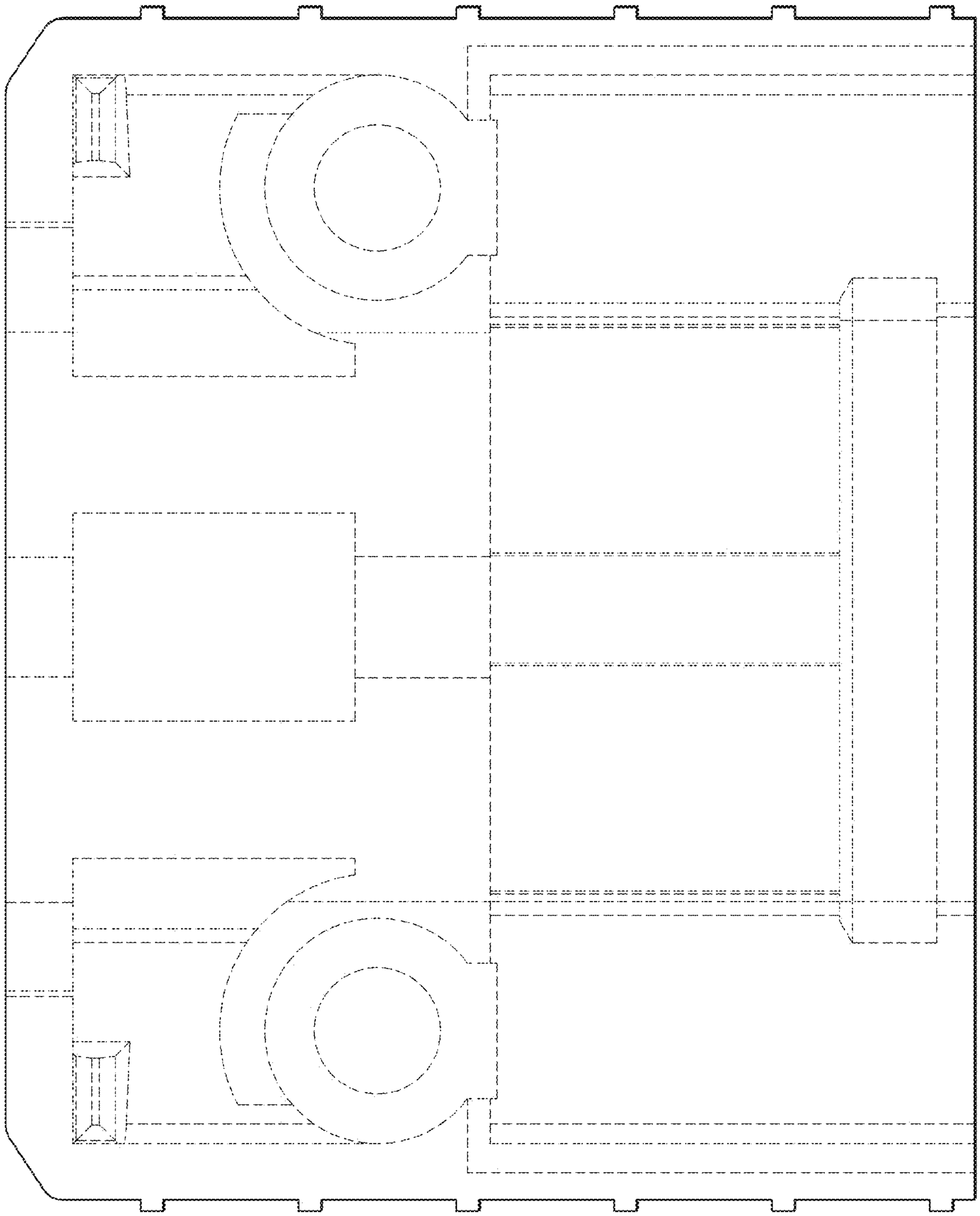

FIG. 7

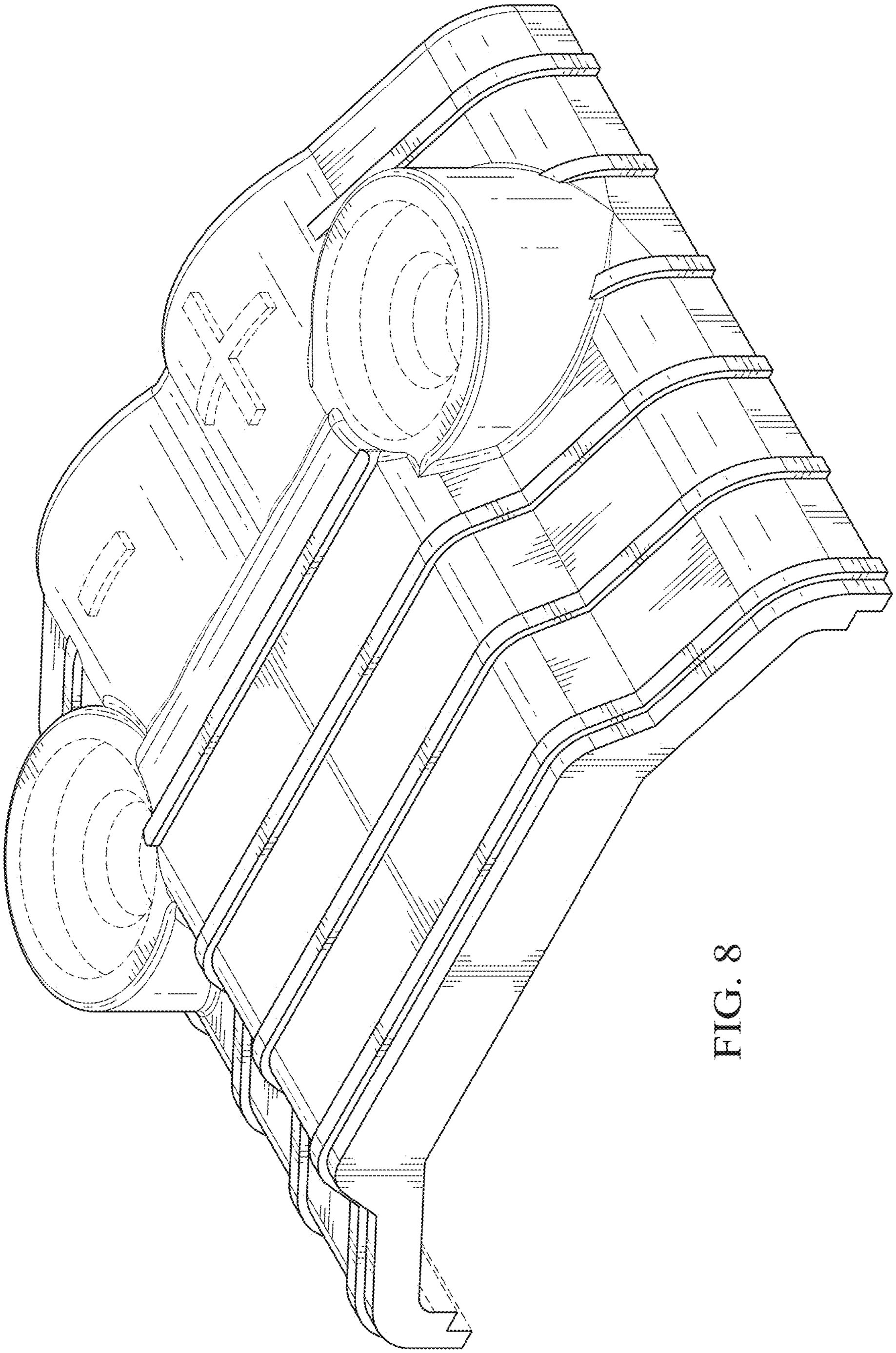

FIG. 8

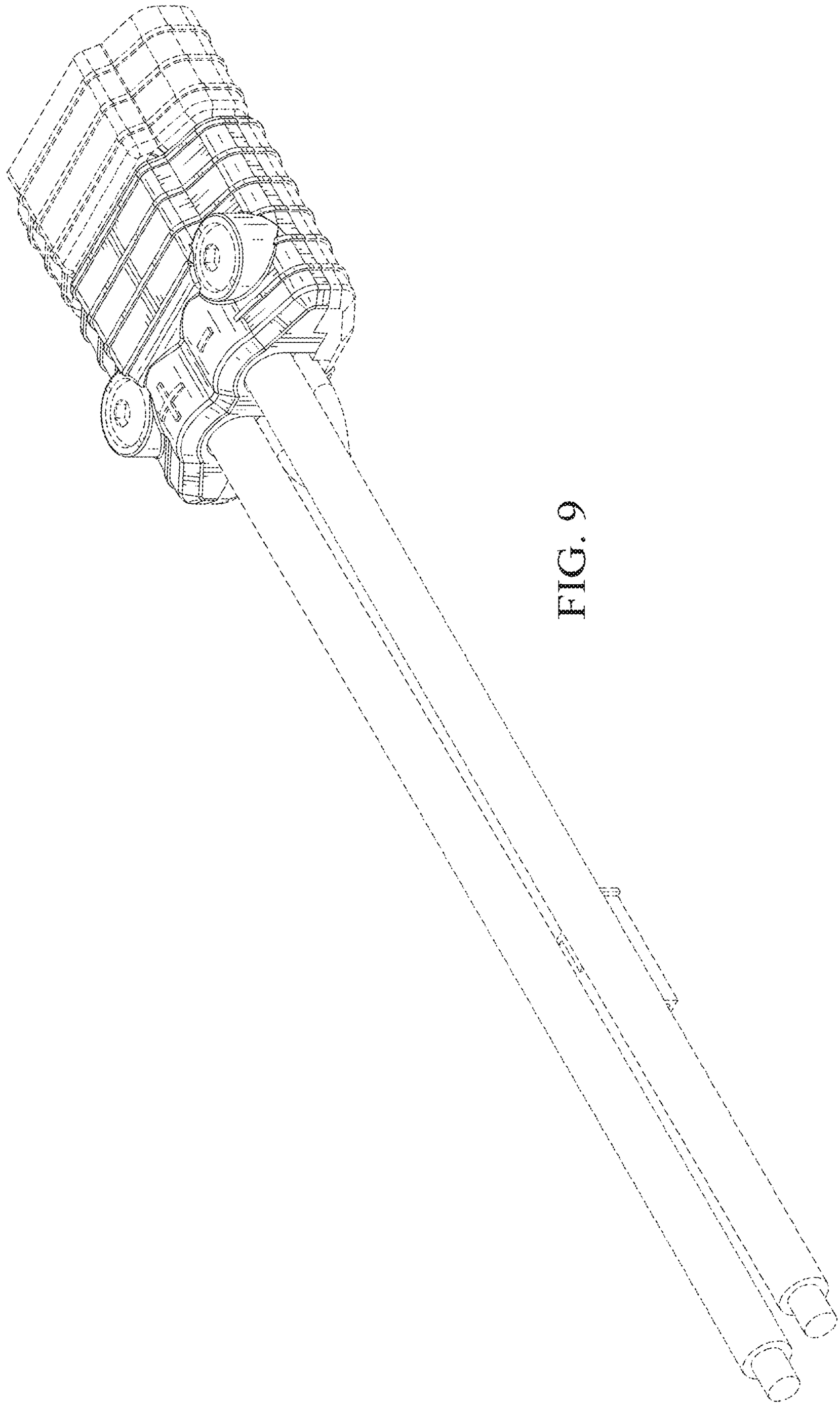

FIG. 9