US00D939332S

(12) United States Design Patent

Kovacs et al.

(10) Patent No.: US D939,332 S
(45) Date of Patent: ** *Dec. 28, 2021

(54) **BRACKET FOR MOUNTING TO STRUCTURE**

(71) Applicant: **PMC Industries, Inc**, Plainville, CT (US)

(72) Inventors: **Tamas Kovacs**, Burlington, CT (US); **Robert Mercier**, Newington, CT (US)

(73) Assignee: **PMC Industries, Inc.**, Plainville, CT (US)

(*) Notice: This patent is subject to a terminal disclaimer.

(**) Term: **15 Years**

(21) Appl. No.: **29/698,685**

(22) Filed: **Jul. 18, 2019**

(51) **LOC (13) Cl.** **08-05**

(52) **U.S. Cl.**
USPC **D8/380**

(58) **Field of Classification Search**
USPC D8/380, 499, 354, 349, 364, 382, 394, D8/395; D25/119, 120, 121, 123, 124, D25/125, 131, 132, 133, 134, 135, 136, D25/137, 164, 199, 113–118
CPC E04H 2004/146; E04H 2004/147; E06B 1/32; E06B 1/34; E06B 1/524; E06B 2003/7049; E04B 2005/176; E04B 2005/324; E04D 13/0641; E04D 13/064; E04D 13/0725
See application file for complete search history.

(56) **References Cited**

U.S. PATENT DOCUMENTS

D475,613	S	*	6/2003	Mullane	D8/499
D547,163	S	*	7/2007	Xayoiphonh	D8/363
D547,164	S	*	7/2007	Xayoiphonh	D8/363
D713,425	S	*	9/2014	Irion	D15/32
D835,980	S	*	12/2018	Kovacs	D8/499
D836,553	S	*	12/2018	Yamamoto	D13/119
D836,554	S	*	12/2018	Yamamoto	D13/119
D860,769	S	*	9/2019	Wokutch	D8/380
D866,305	S	*	11/2019	Mercier	D8/380
D866,306	S	*	11/2019	Mercier	D8/380
D886,571	S	*	6/2020	Twitchell	D8/356

(Continued)

FOREIGN PATENT DOCUMENTS

KR 300626076 * 12/2011

OTHER PUBLICATIONS

Solar Panel Mounting Z Bracket _ Renogy Solar, Date Visited: Feb. 9, 2021, https://www.renogy.com, Date Available: 2019, https://www.renogy.com/solar-panel-mounting-z-bracket-set-of-4/ (Year: 2019).*

Primary Examiner — Susan Bennett Hattan
Assistant Examiner — Elizabeth S Ko
(74) *Attorney, Agent, or Firm* — Damian Wasserbauer, Esq.; Wasserbauer Law LLC

(57) **CLAIM**

The ornamental design for a bracket for mounting to structure, as shown and described.

DESCRIPTION

FIG. **1** is a perspective view of a bracket for mounting to structure in accordance with the present invention;
FIG. **2** is a front view of the bracket for mounting to structure;
FIG. **3** is a back view of the bracket for mounting to structure;
FIG. **4** is a left side of the bracket for mounting to structure;
FIG. **5** is a right side view of the bracket for mounting to structure;
FIG. **6** is a top view of the bracket for mounting to structure; and,
FIG. **7** is a bottom view of the bracket for mounting to structure.

1 Claim, 7 Drawing Sheets

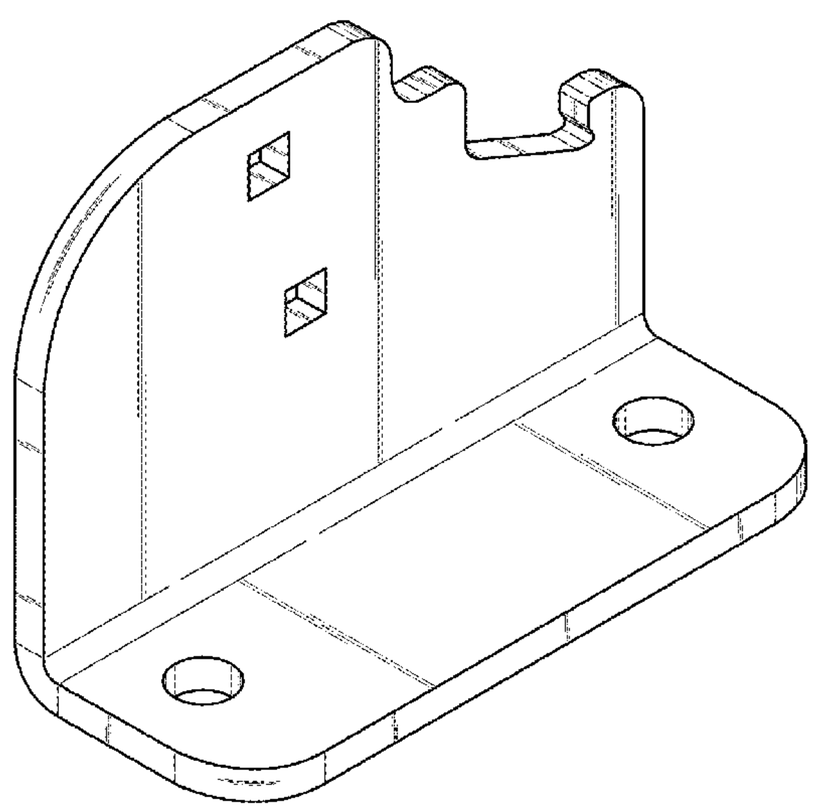

(56) **References Cited**

U.S. PATENT DOCUMENTS

D899,897	S	*	10/2020	Gustafsson Salmonsson	D8/354
D902,701	S	*	11/2020	Smith	D8/366
D902,702	S	*	11/2020	Smith	D8/366
2016/0025262	A1	*	1/2016	Stearns	H01Q 1/1207 248/70
2016/0123016	A1	*	5/2016	Hudson	E04D 13/10 52/24

* cited by examiner

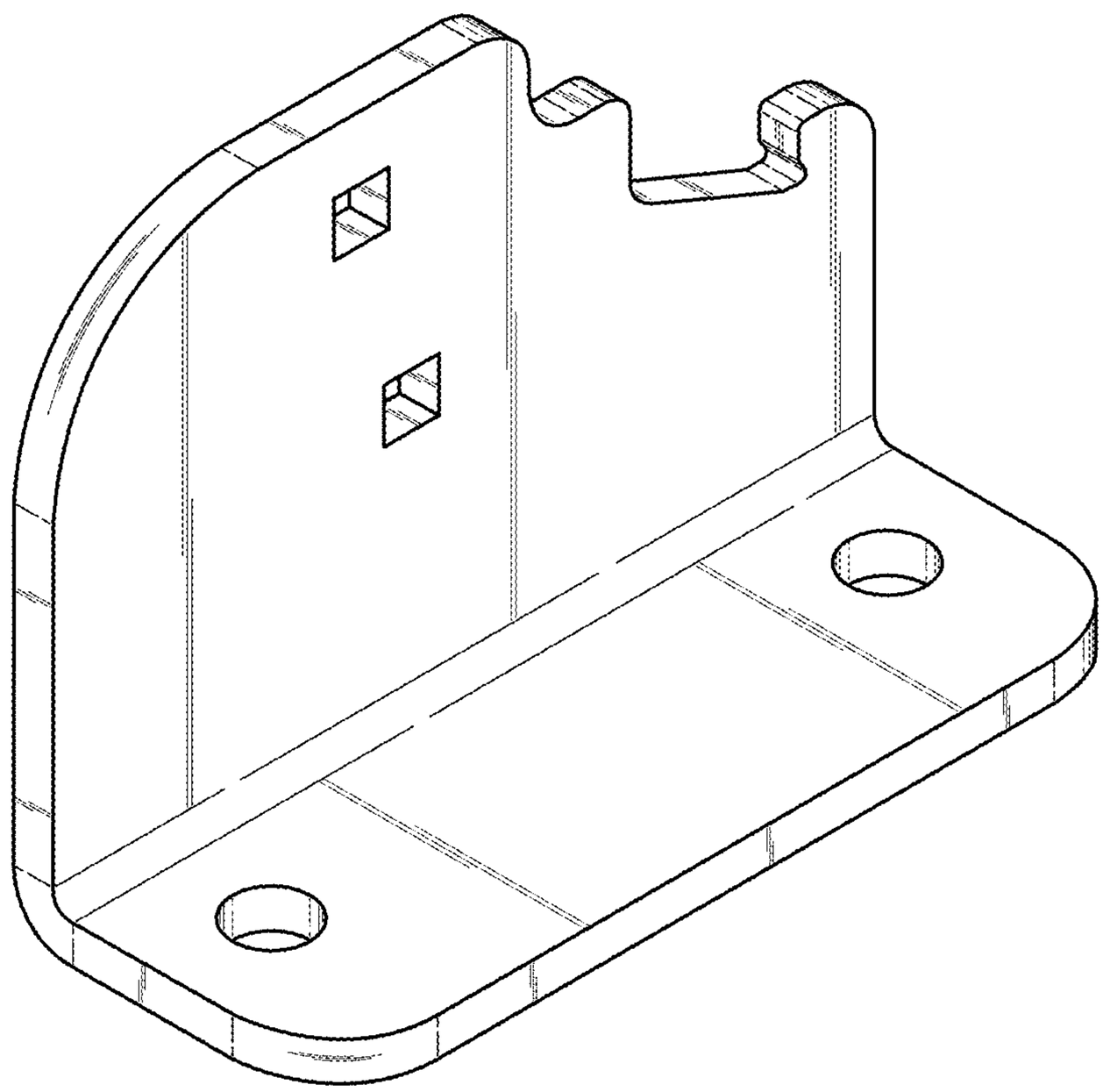

FIG. 1

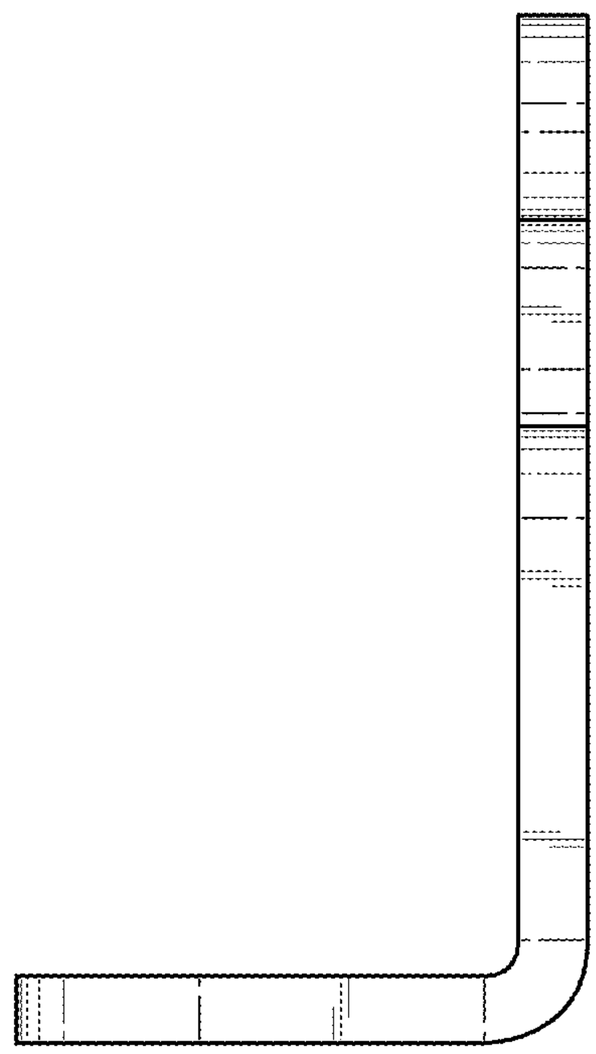

FIG. 2

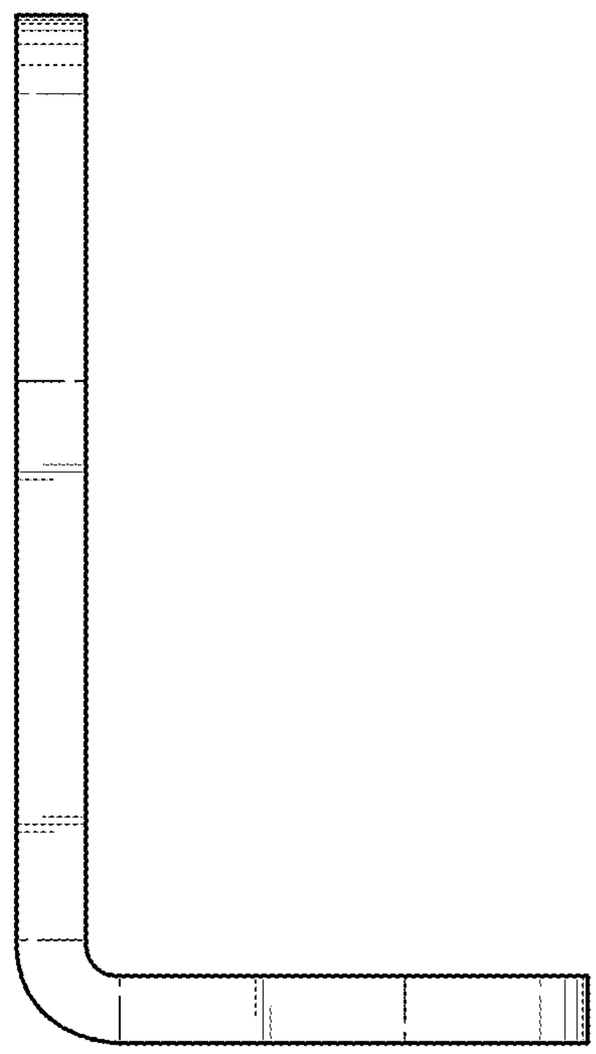

FIG. 3

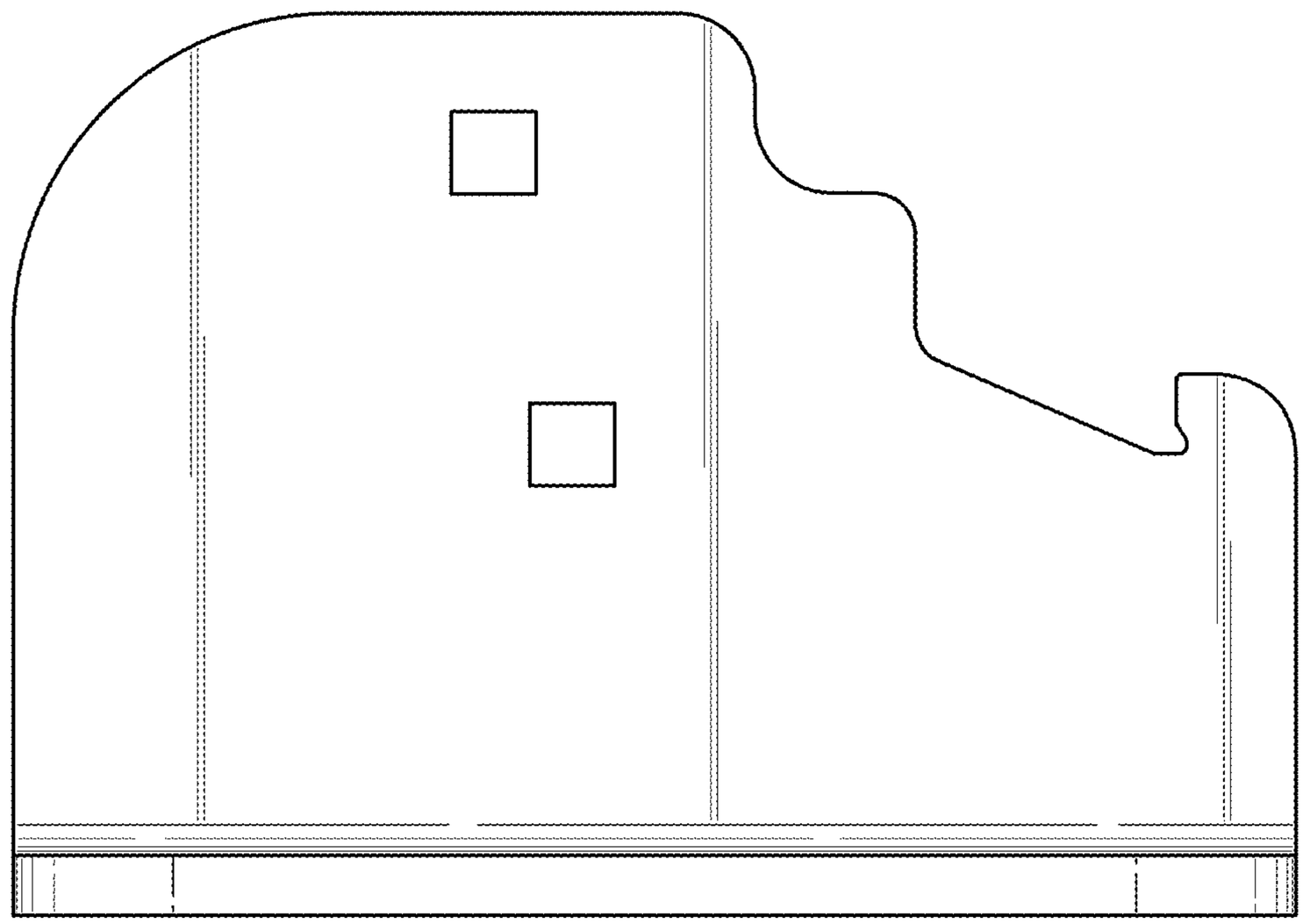

FIG. 4

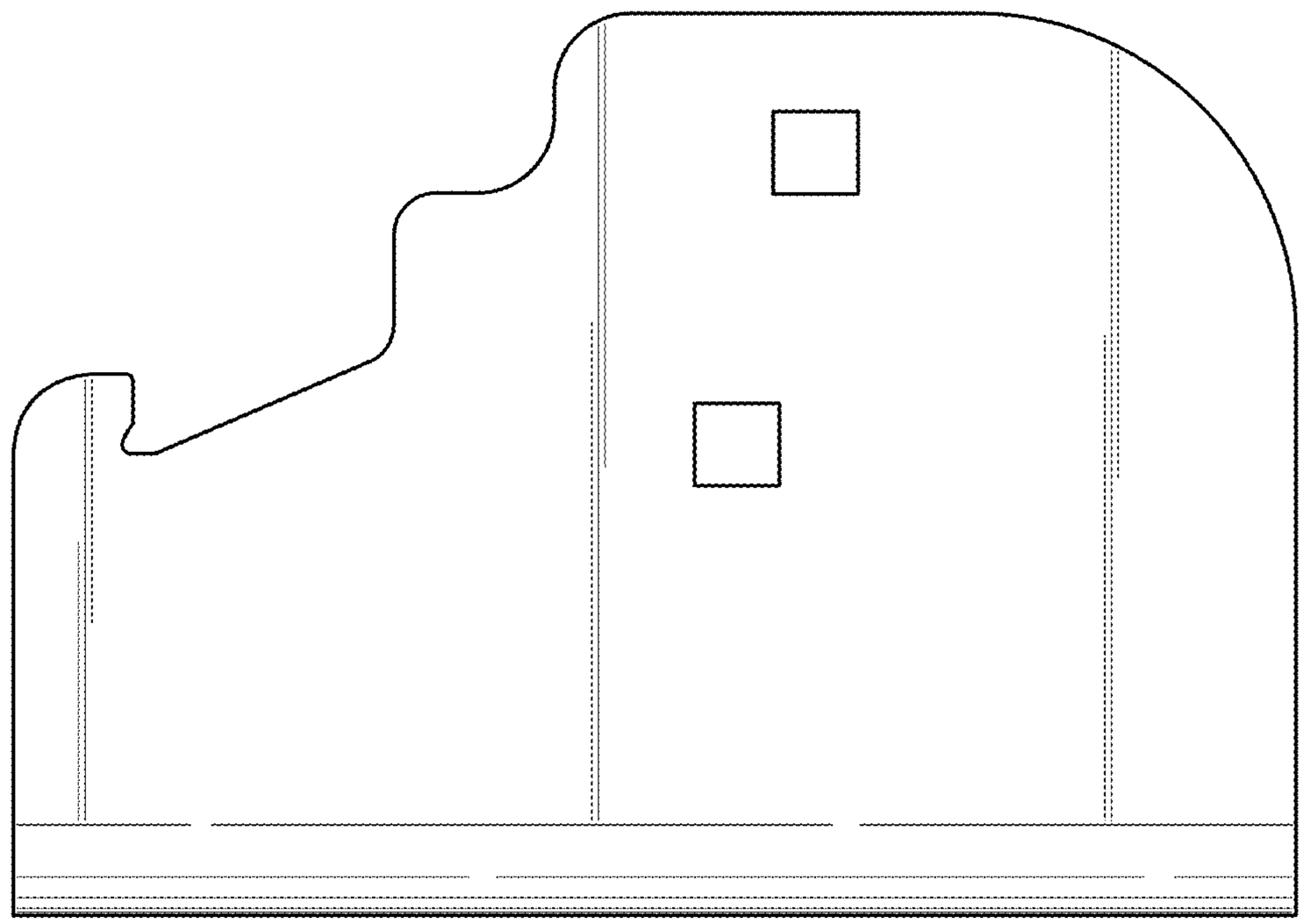

FIG. 5

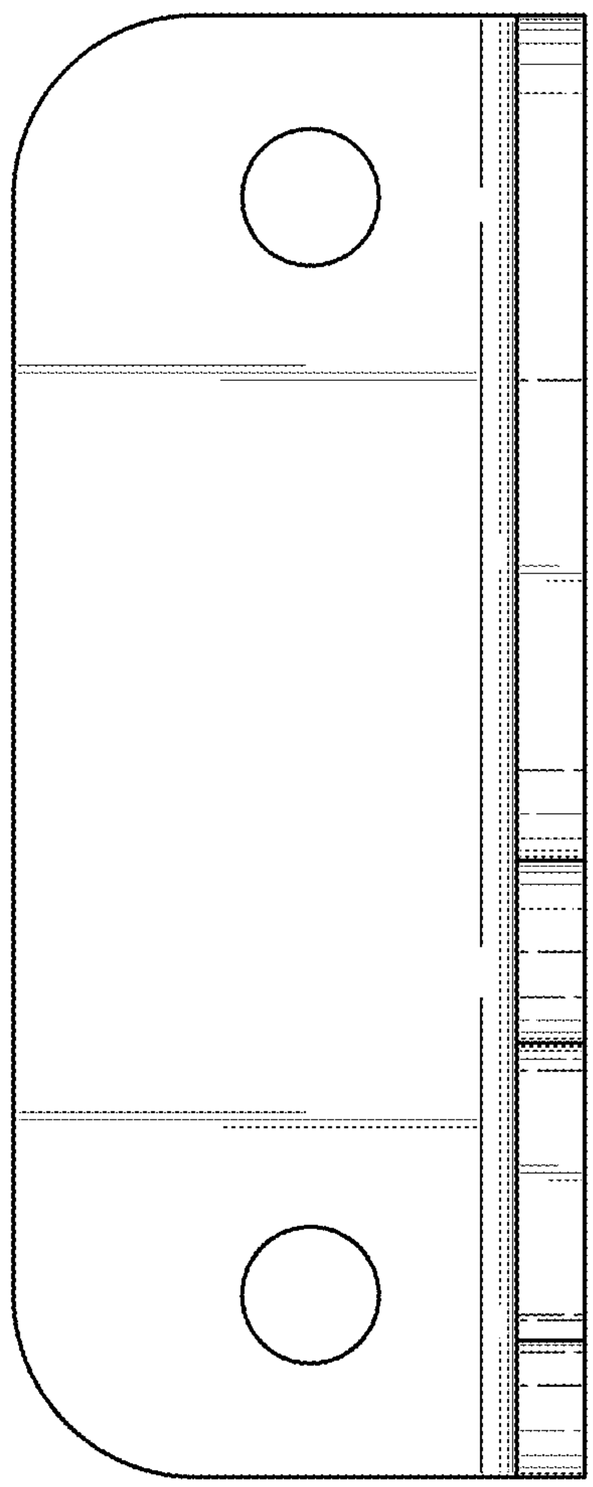

FIG. 6

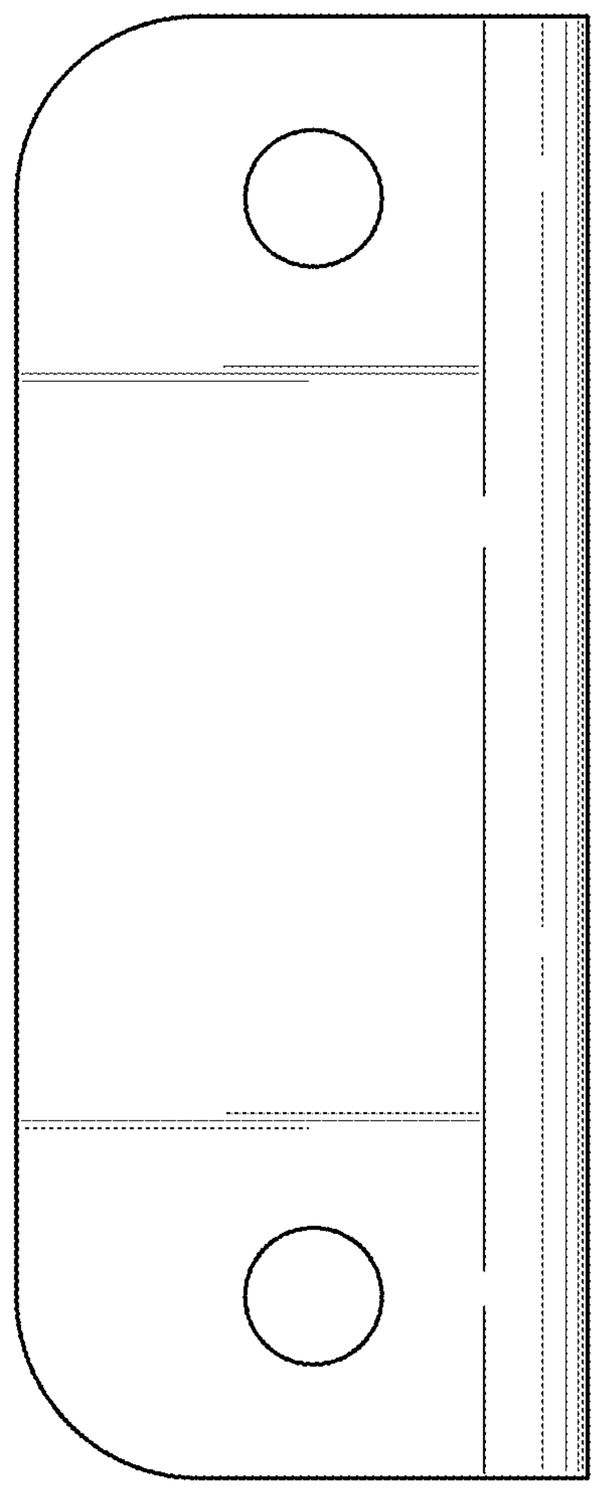

FIG. 7