US00D938999S

(12) United States Design Patent

Congdon et al.

(10) Patent No.: US D938,999 S
(45) Date of Patent: ** Dec. 21, 2021

(54) **CUTTING TOOL HOLDER**

(71) Applicant: **CATERPILLAR INC.**, Peoria, IL (US)

(72) Inventors: **Thomas M. Congdon**, Dunlap, IL (US); **David B. Parzynski, Jr.**, Peoria, IL (US); **Nathan Bjerke**, Peoria, IL (US)

(73) Assignee: **Caterpillar Inc.**, Peoria, IL (US)

(**) Term: **15 Years**

(21) Appl. No.: **29/771,750**

(22) Filed: **Feb. 25, 2021**

Related U.S. Application Data

(63) Continuation of application No. 29/670,396, filed on Nov. 15, 2018, now Pat. No. Des. 920,401.

(51) **LOC (13) Cl.** **15-09**

(52) **U.S. Cl.**
USPC **D15/139**

(58) **Field of Classification Search**
USPC D15/139, 138, 70; D7/378, 319, 505, D7/665, 666; D34/14
CPC E21C 35/18; E21C 35/183; E21C 35/1837; E21C 35/197; E21C 35/1831; E21C 35/1933; E21C 35/188; E21C 35/19; E21C 35/1835; E21C 35/191; E21C 27/22; B28D 1/125; E21B 10/36; E21B 10/46; E21B 17/1092
See application file for complete search history.

(56) **References Cited**

U.S. PATENT DOCUMENTS

4,065,185	A		12/1977	Elders
D347,232	S		5/1994	Massa et al.
5,484,191	A		1/1996	Sollami
5,551,760	A		9/1996	Sollami
D387,072	S		12/1997	Ojanen
D399,709	S		10/1998	Lee
D413,126	S	*	8/1999	Warren D15/21
D420,013	S	*	2/2000	Warren D15/139

(Continued)

FOREIGN PATENT DOCUMENTS

CL	199400587	7/1995
CL	2018000175 A1	8/2018

(Continued)

OTHER PUBLICATIONS

Second Official Action from the Chilean Patent Office in Application No. 201901253 dated Jul. 15, 2020.

(Continued)

Primary Examiner — Nathaniel D. Buckner
(74) *Attorney, Agent, or Firm* — Finnegan, Henderson, Farabow, Garrett & Dunner, LLP

(57) **CLAIM**

The ornamental design for a cutting tool holder, as shown and described.

DESCRIPTION

FIG. **1** is a front, top, left perspective view of a cutting tool holder showing the new design;
FIG. **2** is a rear, bottom, left perspective view thereof;
FIG. **3** is a left side view thereof, with the claimed design being radially symmetric;
FIG. **4** is a front elevation view thereof, with the claimed design being radially symmetric; and,
FIG. **5** is a rear elevation view thereof, with the claimed design being radially symmetric.
The broken lines of uneven length shown in the drawings illustrate the boundary of the claimed design and form no part thereof. The broken lines of even length shown in the drawings illustrate portions of the cutting tool holder that form no part of the claimed design.

1 Claim, 5 Drawing Sheets

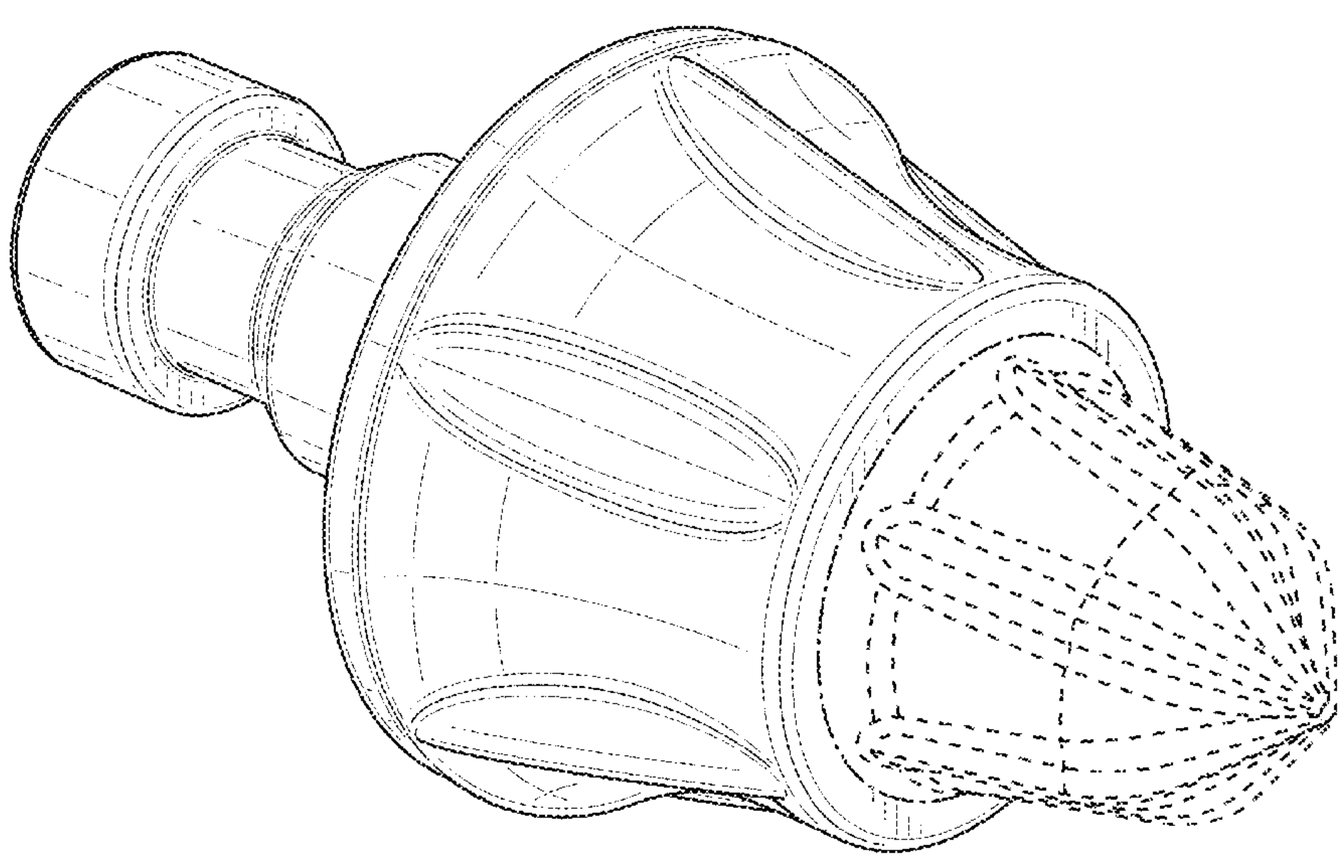

(56) **References Cited**

U.S. PATENT DOCUMENTS

6,019,434	A		2/2000	Emmerich	
6,199,956	B1		3/2001	Kammerer	
6,341,823	B1		1/2002	Sollami	
D520,035	S		5/2006	Kammerer	
D558,241	S	*	12/2007	Chiang	D15/139
D558,242	S	*	12/2007	Chiang	D15/139
D572,735	S		7/2008	Kammerer	
D572,736	S		7/2008	Chiang	
D585,918	S	*	2/2009	Chiang	D15/139
D627,804	S	*	11/2010	Fader	D15/139
D627,808	S		11/2010	Kammerer	
D627,809	S		11/2010	Kammerer	
D636,797	S		4/2011	Kammerer	
D637,213	S		5/2011	Kammerer	
8,267,483	B2		9/2012	Krämer et al.	
8,636,325	B2		1/2014	Greenspan et al.	
D699,522	S		2/2014	Wong	
8,783,785	B2		7/2014	Lehnert et al.	
D742,948	S		11/2015	Kenno et al.	
D742,949	S	*	11/2015	Kenno	D15/139
D747,936	S		1/2016	Chitayat et al.	
D756,173	S		5/2016	Decaris et al.	
9,458,607	B2		10/2016	Swope et al.	
D772,315	S	*	11/2016	Friederichs	D15/139
D837,845	S		1/2019	Jones et al.	
D841,063	S	*	2/2019	Friederichs	D15/139
D863,386	S	*	10/2019	Swope	D15/139
D868,122	S		11/2019	Rose et al.	
2008/0036282	A1		2/2008	Hall et al.	
2010/0295360	A1	*	11/2010	Kramer	E21C 35/197 299/110
2010/0320003	A1		12/2010	Sollami et al.	
2011/0204702	A1	*	8/2011	Lehnert	E21C 35/183 299/105
2012/0104830	A1		5/2012	Monyak et al.	
2013/0002004	A1		1/2013	Greenspan et al.	
2015/0252670	A1	*	9/2015	Wachsmann	E21C 35/197 299/10
2018/0142432	A1		5/2018	Rostvall et al.	
2020/0157938	A1		5/2020	Congdon et al.	

FOREIGN PATENT DOCUMENTS

CN	201763340	U	3/2011
CN	103603663	U	2/2014
CN	204082144	U	1/2015
CN	107060753	U	8/2017
DE	402017100855		10/2017

OTHER PUBLICATIONS

U.S. Appl. No. 16/192,061, of Thomas Marshall Congdon et al., titled "Carbide Cutter Bit With Ribbed Sides and Conical Tip"; filed Nov. 15, 2018.

* cited by examiner

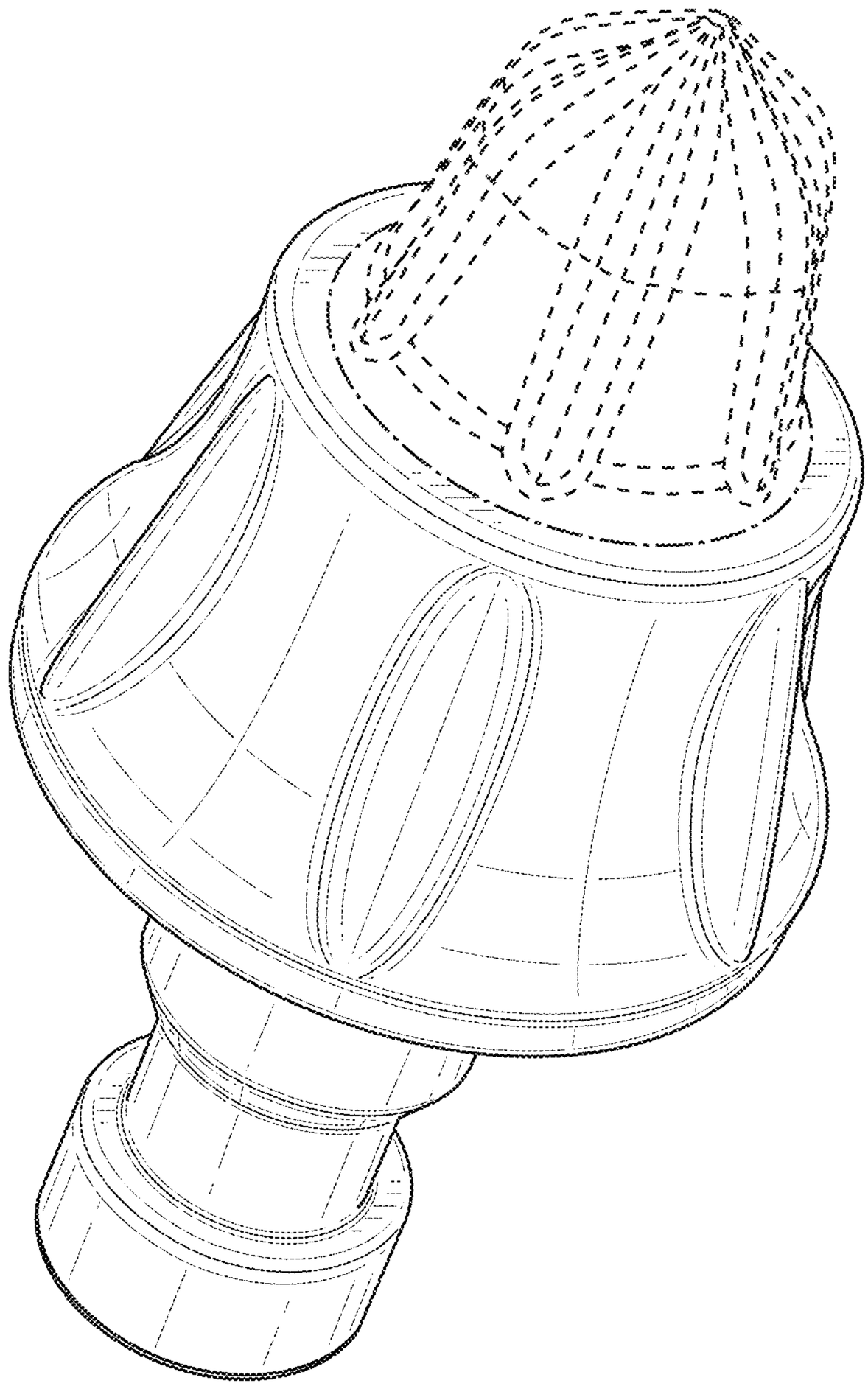

FIG. 1

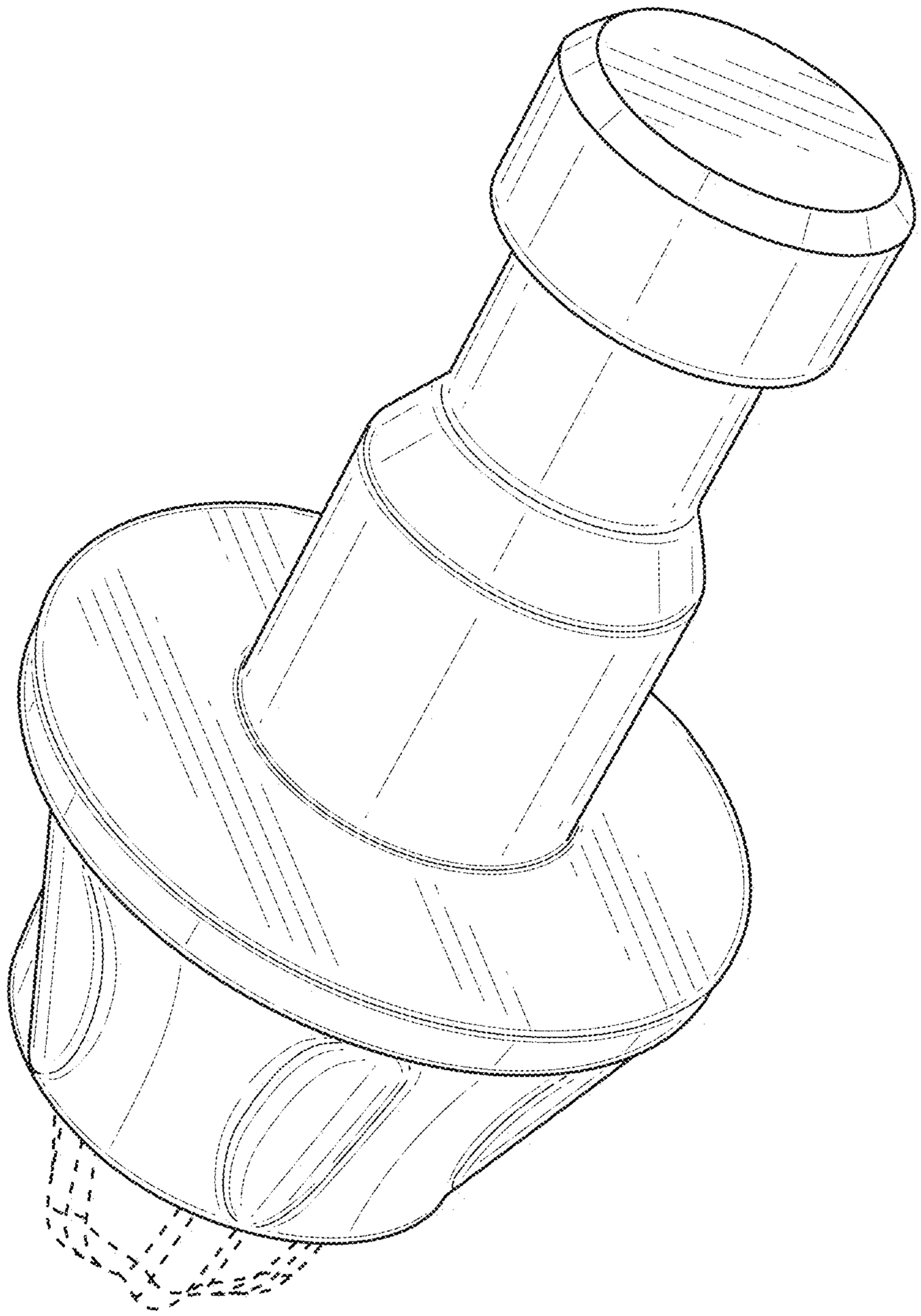

FIG. 2

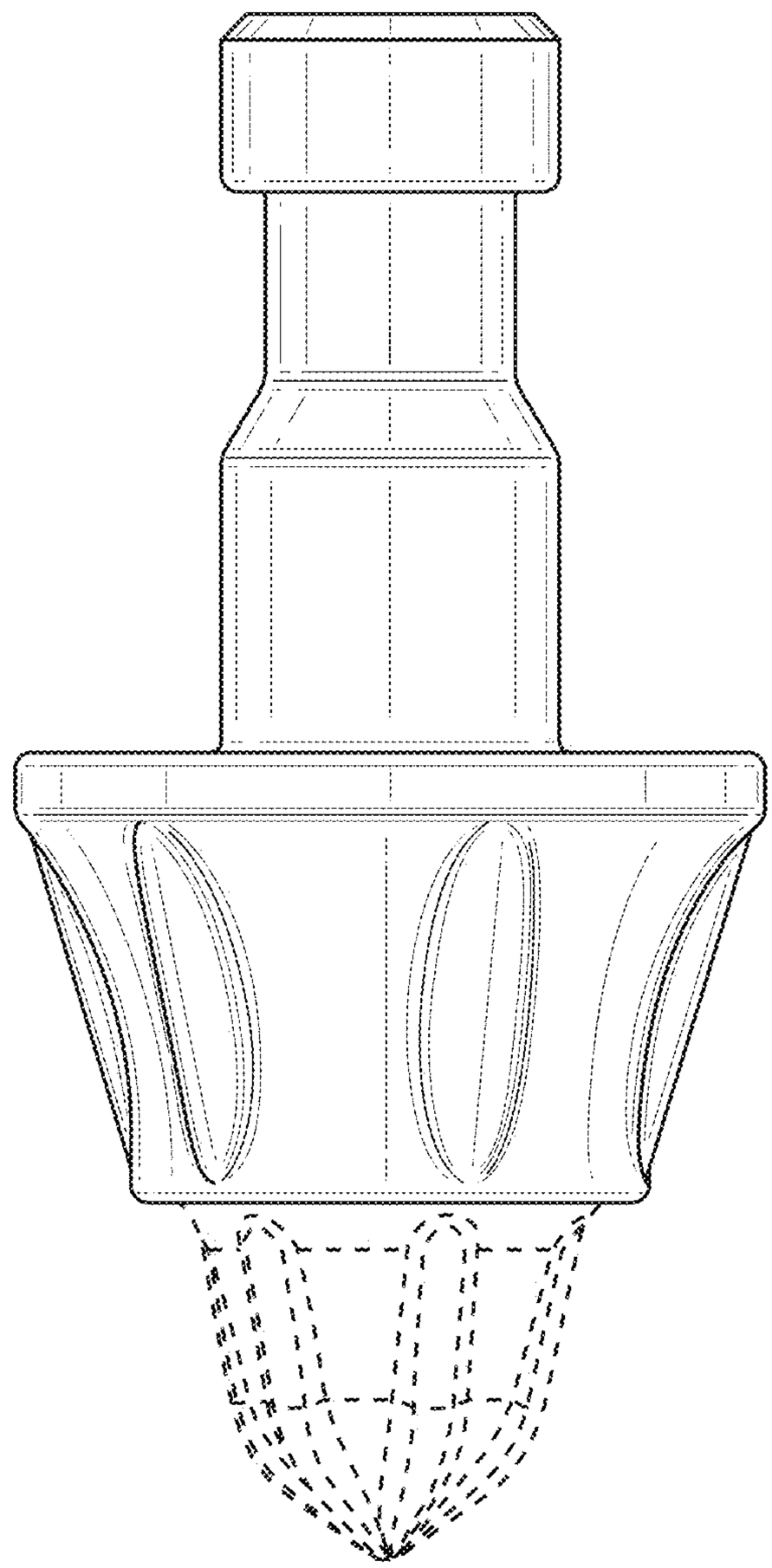

FIG. 3

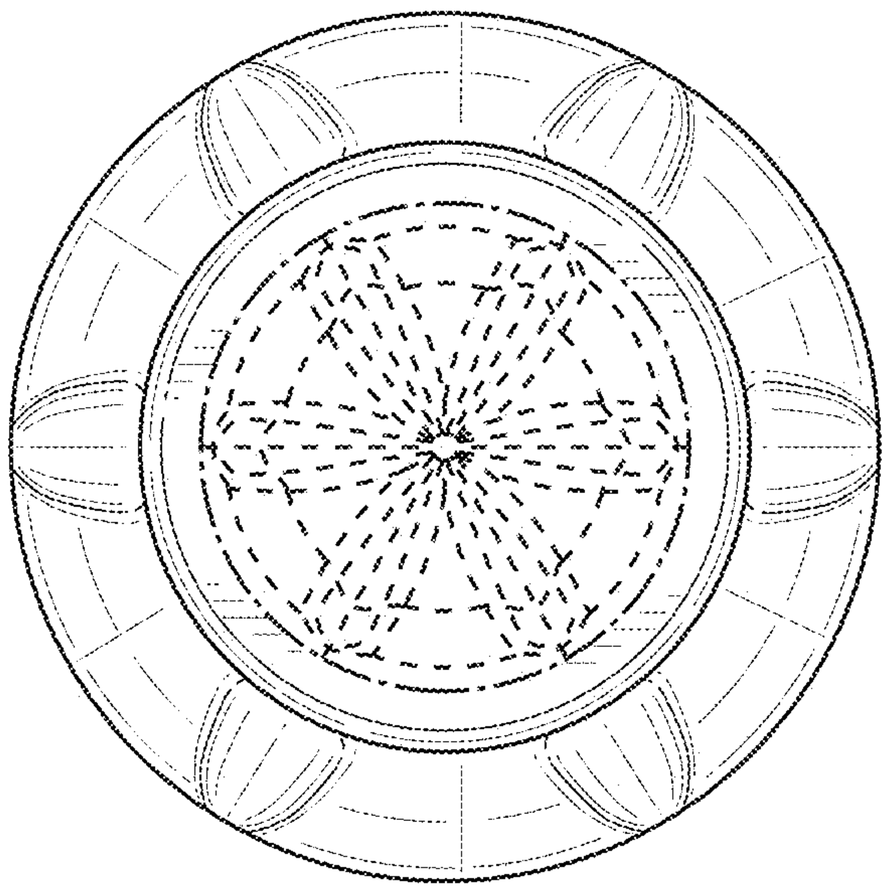

FIG. 4

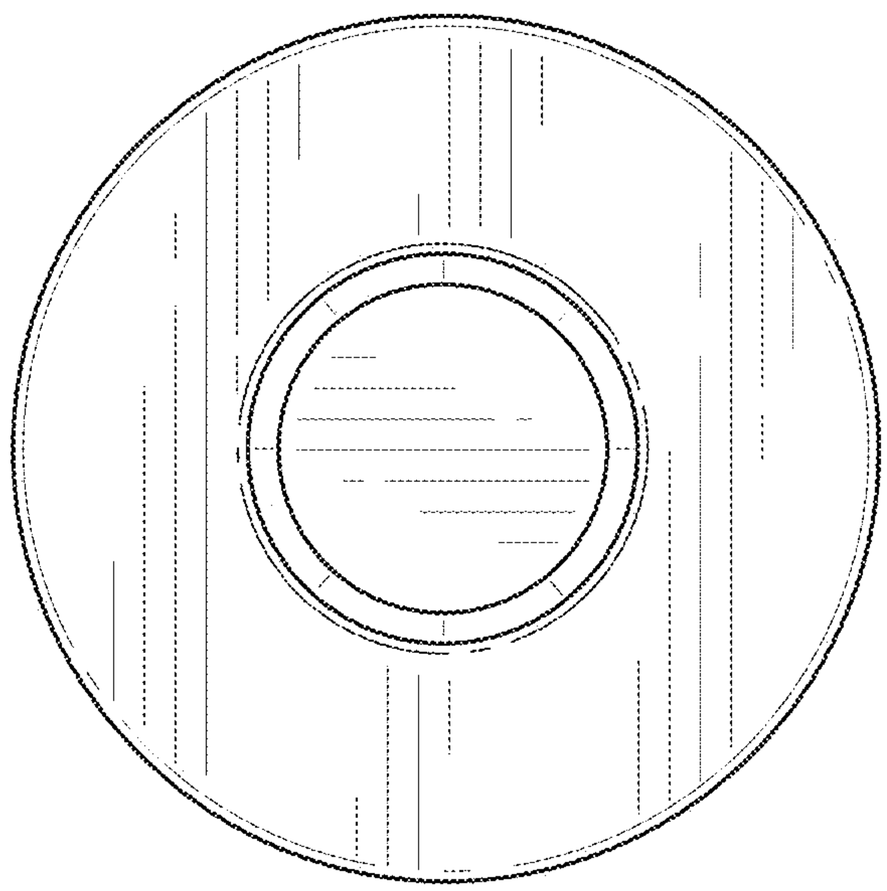

FIG. 5