US00D938408S

# (12) United States Design Patent

Nahum et al.

(10) Patent No.: US D938,408 S
(45) Date of Patent: ** Dec. 14, 2021

(54) **ACCESSORY FOR A MOBILE ELECTRONIC DEVICE**

(71) Applicant: **POPSOCKETS LLC**, Boulder, CO (US)

(72) Inventors: **Altan Nahum**, Boulder, CO (US); **Thomas W Meiser**, Lakewood, CO (US)

(73) Assignee: **POPSOCKETS LLC**, Boulder, CO (US)

(**) Term: **15 Years**

(21) Appl. No.: **29/693,637**

(22) Filed: **Jun. 4, 2019**

(51) **LOC (13) Cl.** ..... **14-03**

(52) **U.S. Cl.**
USPC ..... **D14/253**

(58) **Field of Classification Search**
USPC ..... D14/251–253, 440, 447, 217, 238.1; D12/415; D3/218, 247, 249; D13/108; D6/310; D8/353; D16/237, 239; D26/51, 37, 38, 44
CPC ..... H04M 1/04; H04M 1/21; H04M 1/0266; F16M 13/00; F16M 11/041; B60R 11/0241; B60R 11/0252; B60R 2011/0059; B60R 2011/0063; B60R 2011/0005; B60R 2011/0003; B60R 2011/0078; H02J 7/0027; H02J 2310/22; A45F 2200/0516; A45F 5/00; A45F 2200/0525; A45F 5/10; A45C 2011/002; G03B 17/561; G03B 27/582; A47B 97/04; G09F 1/00
See application file for complete search history.

(56) **References Cited**

U.S. PATENT DOCUMENTS

D681,612 S * 5/2013 Palacios ..... H04M 1/04 D14/238.1
D696,241 S * 12/2013 Paugh ..... A45F 5/004 D14/253
D738,873 S * 9/2015 Kim ..... D14/253
D753,643 S * 4/2016 Kim ..... D14/253
D757,705 S * 5/2016 Esses ..... D14/251
D783,012 S * 4/2017 Lee ..... D14/253
9,975,497 B2 * 5/2018 Kim ..... F16M 11/041
D826,023 S * 8/2018 Chun ..... D8/72
D826,225 S * 8/2018 Chen ..... D14/253
D827,405 S * 9/2018 Chun ..... D8/72
D831,660 S * 10/2018 Yao ..... D14/447
D840,388 S * 2/2019 Wieth ..... D14/251
D840,994 S * 2/2019 Balmer ..... D14/253
D840,995 S * 2/2019 Balmer ..... D14/253
D852,560 S * 7/2019 Cochrane ..... D6/682.3
D854,006 S * 7/2019 Wang ..... D14/253
D854,537 S * 7/2019 Ackeret ..... D14/253
D868,054 S * 11/2019 Kim ..... D14/253
D881,182 S * 4/2020 Zhang ..... D14/253
(Continued)

*Primary Examiner* — Janice Hallmark
(74) *Attorney, Agent, or Firm* — Holland & Hart LLP

(57) **CLAIM**

The ornamental design for an accessory for a mobile electronic device, as shown and described.

**DESCRIPTION**

FIG. **1** is a top isometric view of an accessory for a mobile electronic device showing our new design;
FIG. **2** is a bottom isometric view thereof;
FIG. **3** is a right view thereof;
FIG. **4** is a left view thereof;
FIG. **5** is a front view thereof;
FIG. **6** is a back view thereof;
FIG. **7** is a top view thereof; and,
FIG. **8** is a bottom view thereof.
The broken lines in the drawings depict environmental subject matter only and form no part of the claimed design.

**1 Claim, 5 Drawing Sheets**

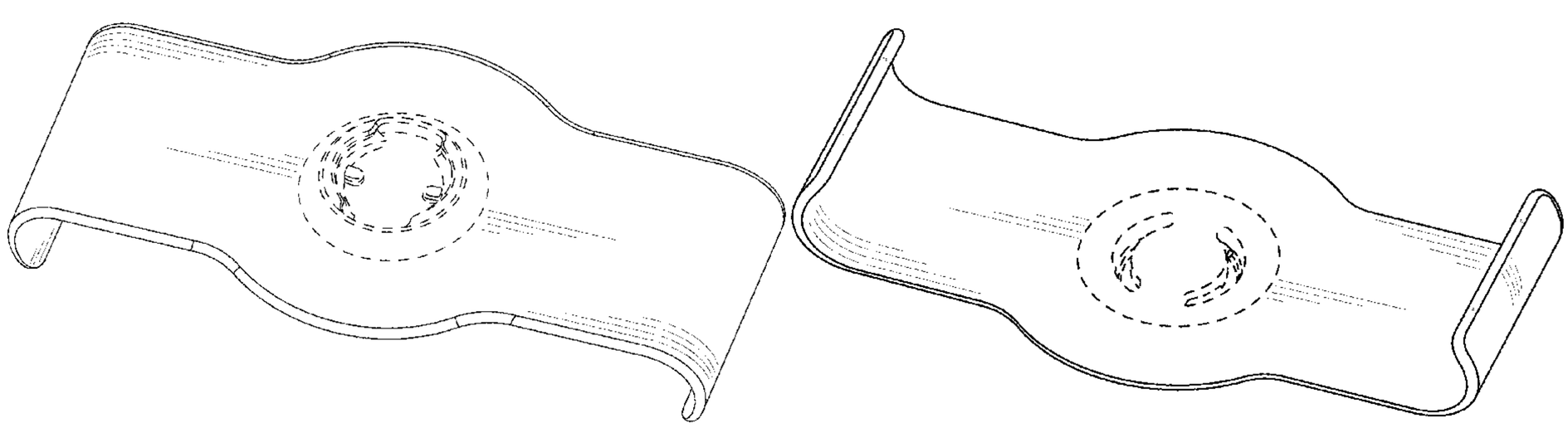

(56) **References Cited**

U.S. PATENT DOCUMENTS

| | | | | | |
|---|---|---|---|---|---|
| D881,201 | S | * | 4/2020 | Lou | D14/447 |
| D882,560 | S | * | 4/2020 | Liao | D14/253 |
| D883,271 | S | * | 5/2020 | Liao | D14/253 |
| D883,274 | S | * | 5/2020 | Liu | D14/253 |
| D928,135 | S | * | 8/2021 | Kim | D14/250 |
| 2014/0138419 | A1 | * | 5/2014 | Minn | F16B 2/065 224/567 |
| 2016/0052370 | A1 | * | 2/2016 | Esses | A61L 9/12 239/1 |
| 2017/0232128 | A1 | * | 8/2017 | Esses | H01R 24/62 422/4 |
| 2017/0264329 | A1 | * | 9/2017 | Balmer | F16B 2/12 |
| 2019/0118972 | A1 | * | 4/2019 | Yan | B64D 47/08 |

* cited by examiner

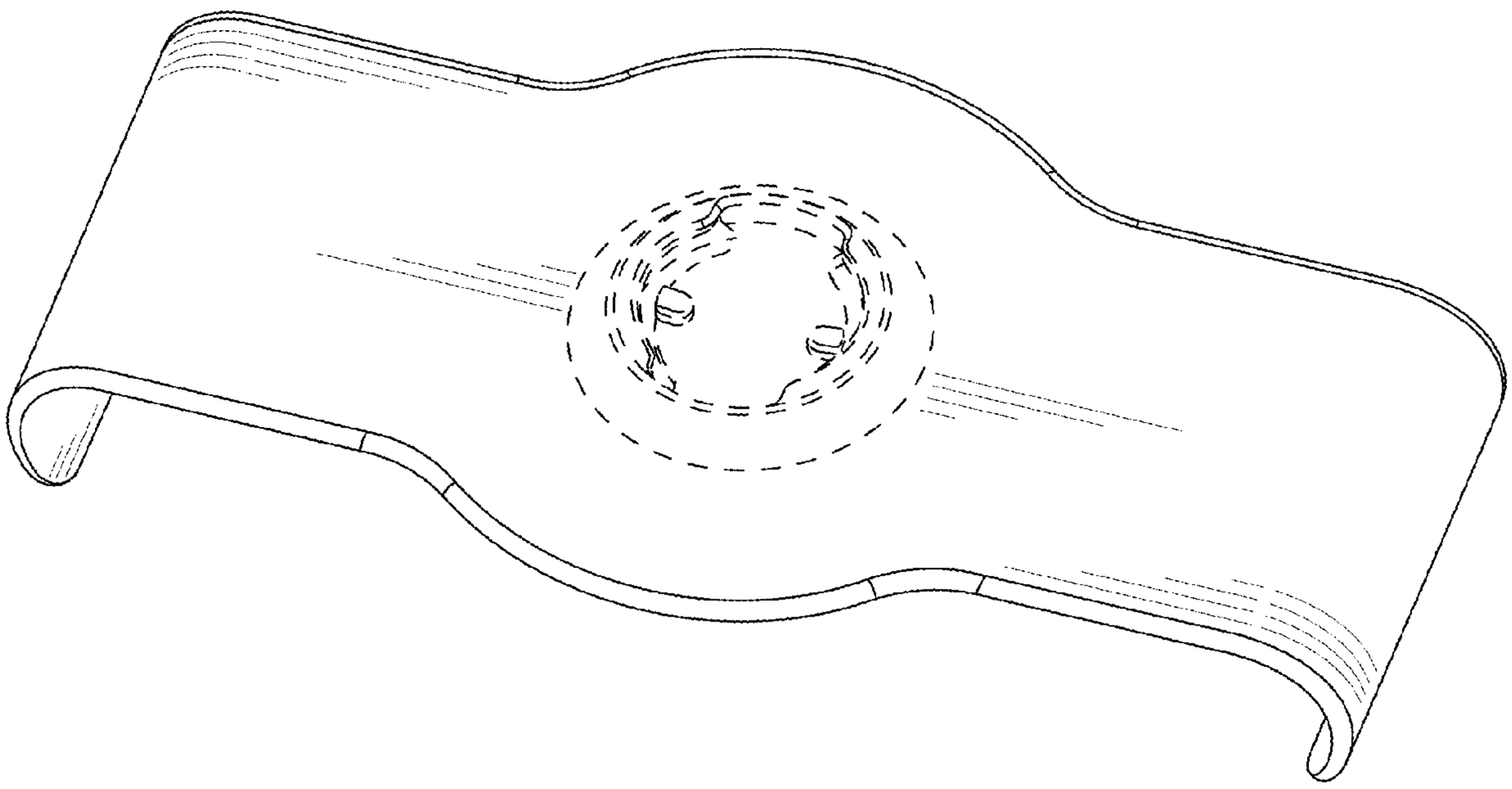

FIG. 1

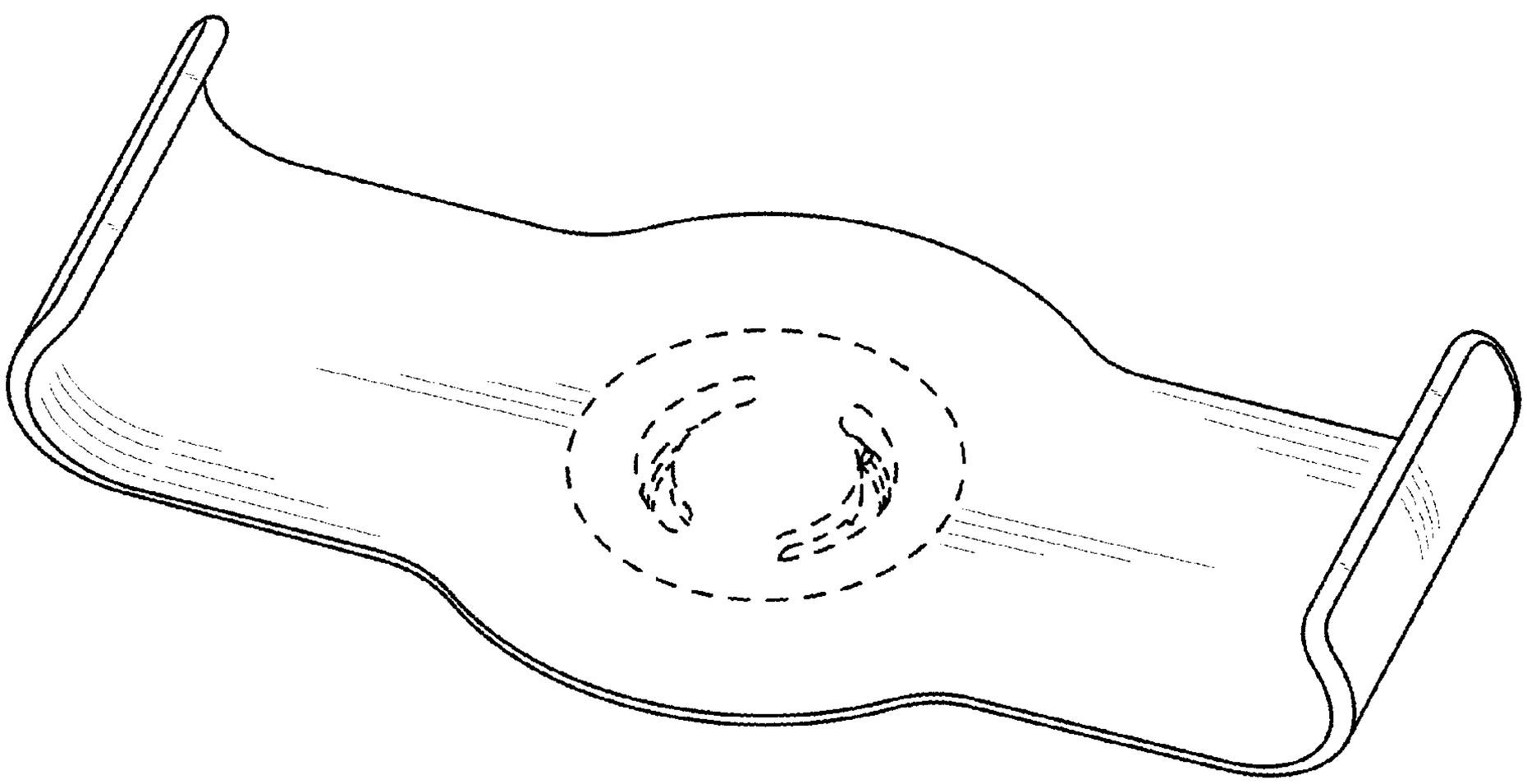

FIG. 2

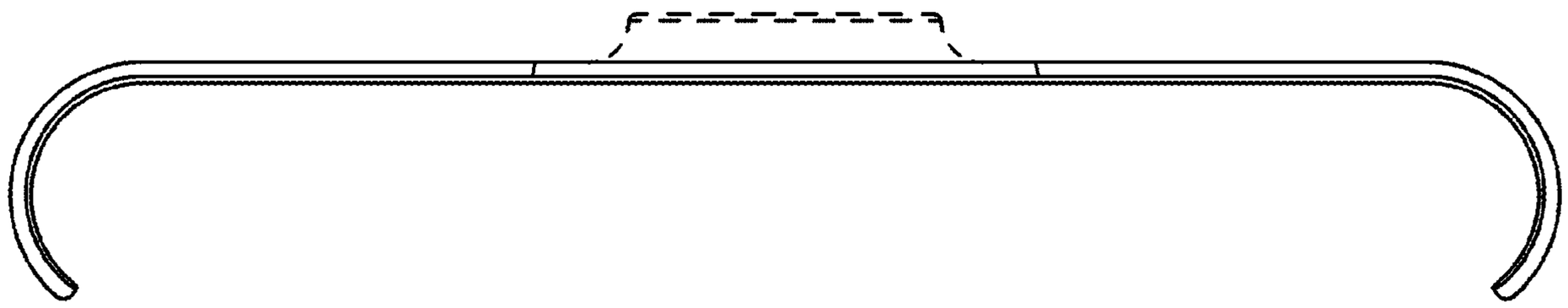

FIG. 3

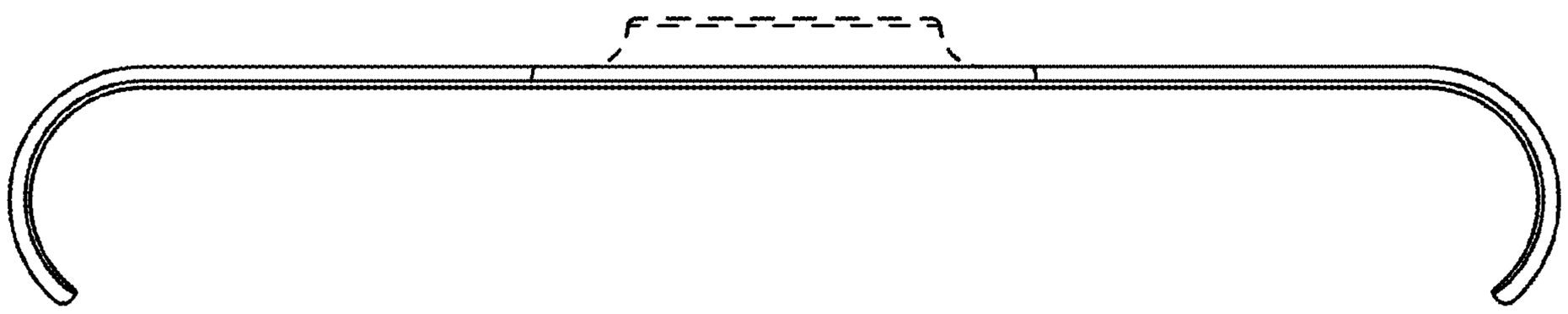

FIG. 4

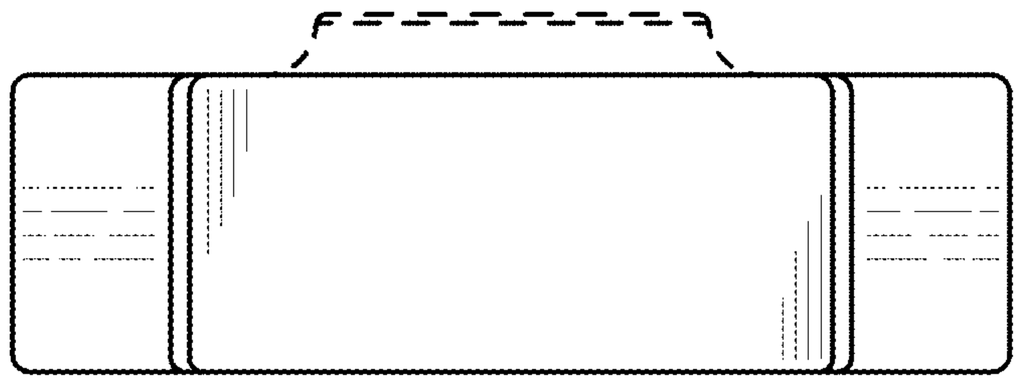

FIG. 5

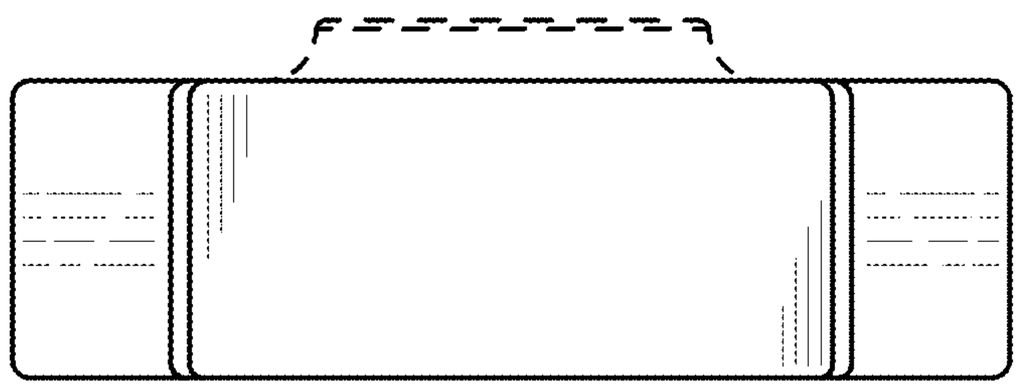

FIG. 6

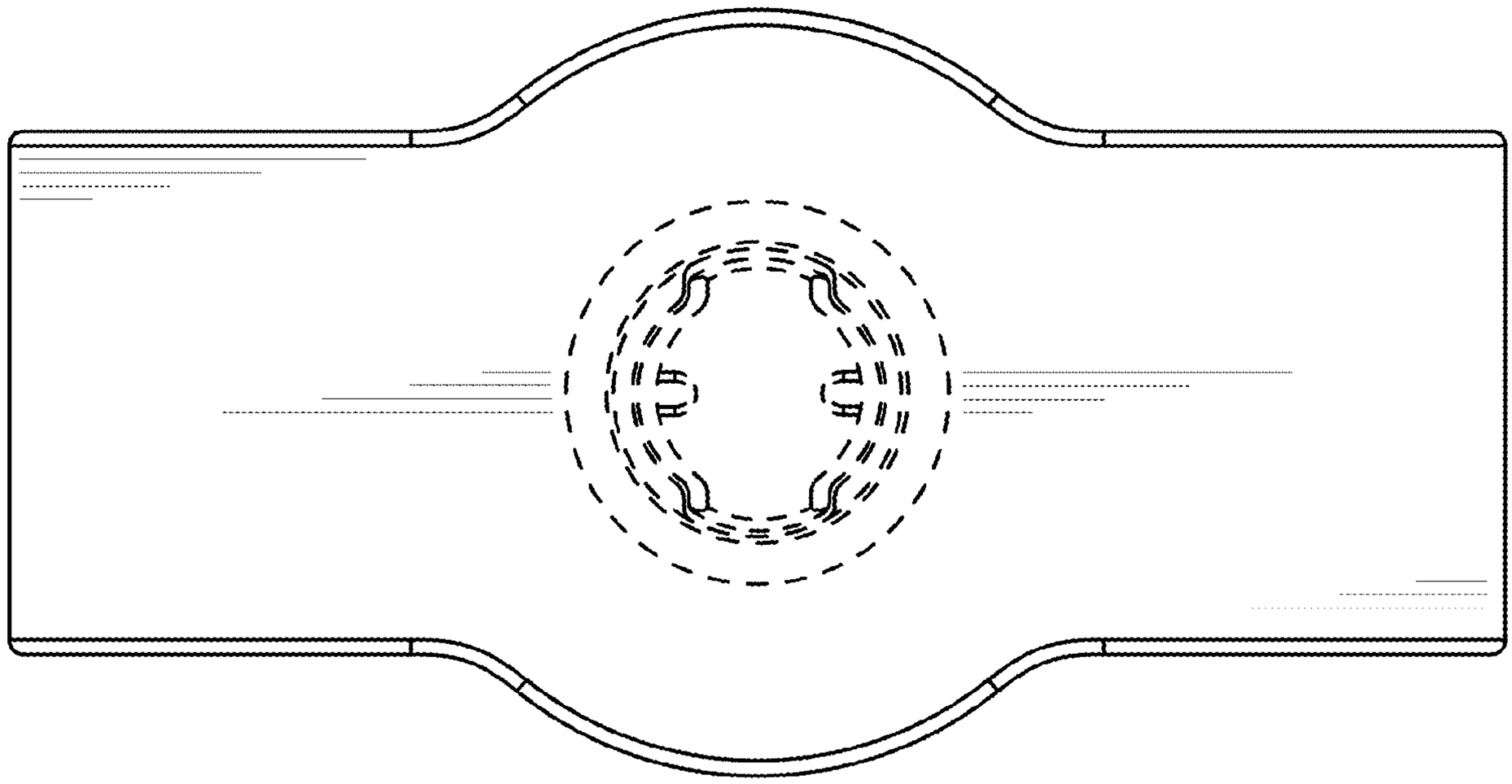

FIG. 7

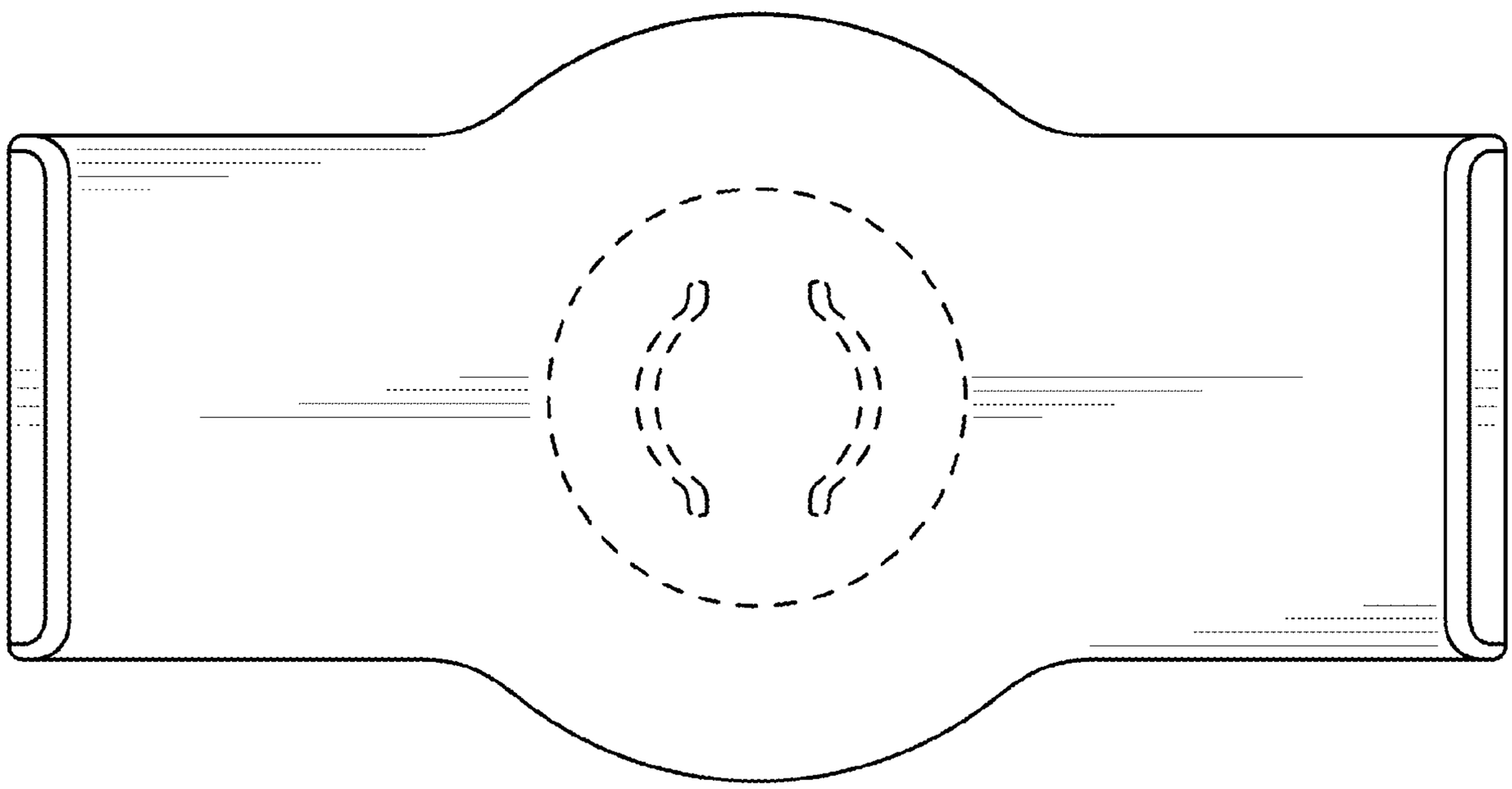

FIG. 8