US00D938351S

(12) United States Design Patent

Yamamoto et al.

(10) Patent No.: US D938,351 S
(45) Date of Patent: ** Dec. 14, 2021

(54) **MODULAR DEVICE CHARGING SYSTEM**

(71) Applicant: **Scosche Industries, Inc.**, Oxnard, CA (US)

(72) Inventors: **Yasuhiro Yamamoto**, Thousand Oaks, CA (US); **Mark Larson**, Camarillo, CA (US); **Vince Alves**, Oxnard, CA (US)

(73) Assignee: **Scosche Industries, Inc.**, Oxnard, CA (US)

(**) Term: **15 Years**

(21) Appl. No.: **29/734,854**

(22) Filed: **May 15, 2020**

Related U.S. Application Data

(63) Continuation of application No. 29/675,756, filed on Jan. 4, 2019, now abandoned, which is a continuation-in-part of application No. 16/234,305, filed on Dec. 27, 2018.

(51) **LOC (13) Cl.** **13-02**

(52) **U.S. Cl.**
USPC **D13/108**

(58) **Field of Classification Search**
USPC D13/107–110, 118–119, 184; D14/251, D14/253, 432, 434
CPC Y02E 60/12; Y02T 90/14; Y02T 90/122; Y02T 90/128; Y02T 90/163; H02J 7/025; H02J 7/0042; H02J 7/0044; H02J 7/0045; H02J 7/0003; H01F 38/14; H01R 13/6675; H01M 2/1022; H01M 2/1055; H01M 10/44; H01M 10/46; H01M 10/425; B60L 11/182
See application file for complete search history.

(56) **References Cited**

U.S. PATENT DOCUMENTS

D574,383	S	*	8/2008	Maruyama	D14/434
D611,407	S	*	3/2010	Webb	D13/108
D617,268	S	*	6/2010	Yen	D13/108
D651,564	S	*	1/2012	Workman	D13/108
D709,445	S	*	7/2014	Yeh	D13/107
D716,304	S	*	10/2014	Orthey	D14/420
D792,409	S	*	7/2017	Shim	D14/435
D817,269	S	*	5/2018	Sukphist	D13/108
D886,735	S	*	6/2020	Yamamoto	D13/108
D887,349	S	*	6/2020	Yamamoto	D13/108
D887,350	S	*	6/2020	Yamamoto	D13/108
D899,361	S	*	10/2020	Lv	D13/108
D909,968	S	*	2/2021	Chen	D13/108

* cited by examiner

Primary Examiner — Nathaniel D. Buckner
(74) *Attorney, Agent, or Firm* — Stetina Brunda Garred & Brucker

(57) **CLAIM**

The ornamental design for a modular device charging system, as shown and described.

DESCRIPTION

FIG. **1** is a front perspective view showing a modular device charging system of the present invention;
FIG. **2** is a rear perspective view thereof;
FIG. **3** is a top view thereof;
FIG. **4** is a front view thereof;
FIG. **5** is a rear view thereof;
FIG. **6** is a right side view thereof;
FIG. **7** is left side view thereof; and,
FIG. **8** is a bottom view thereof.
The broken lines in the figures depict environmental structure and portions of the modular device charging system that form no part of the claimed design.

1 Claim, 6 Drawing Sheets

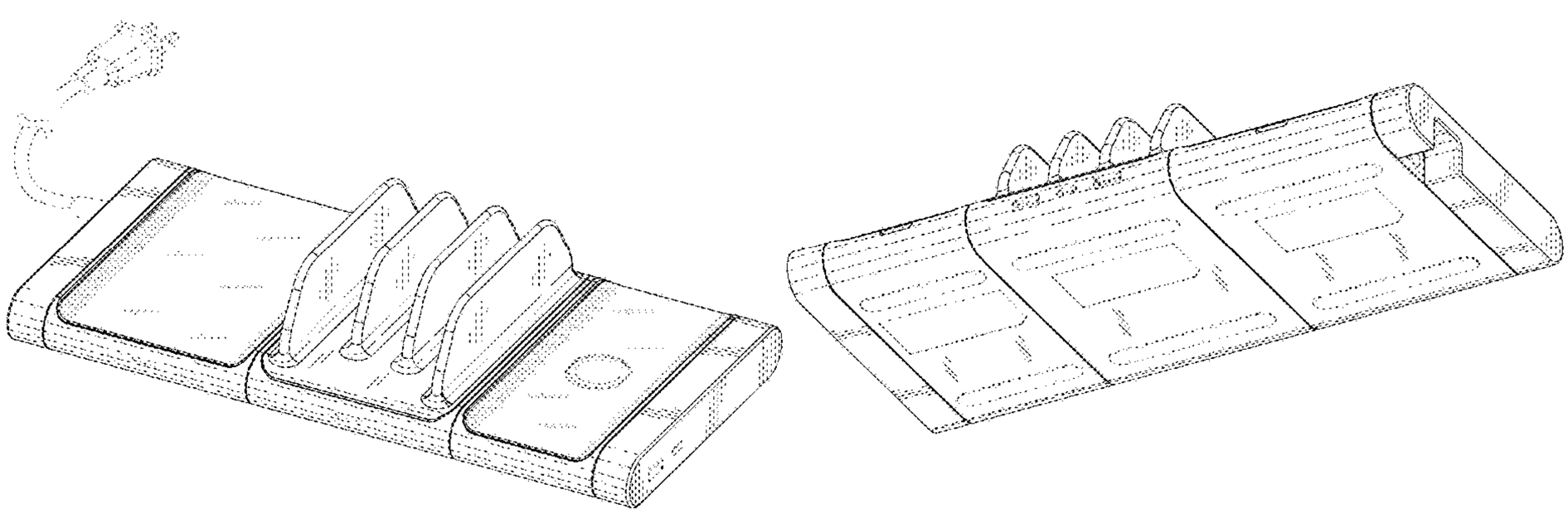

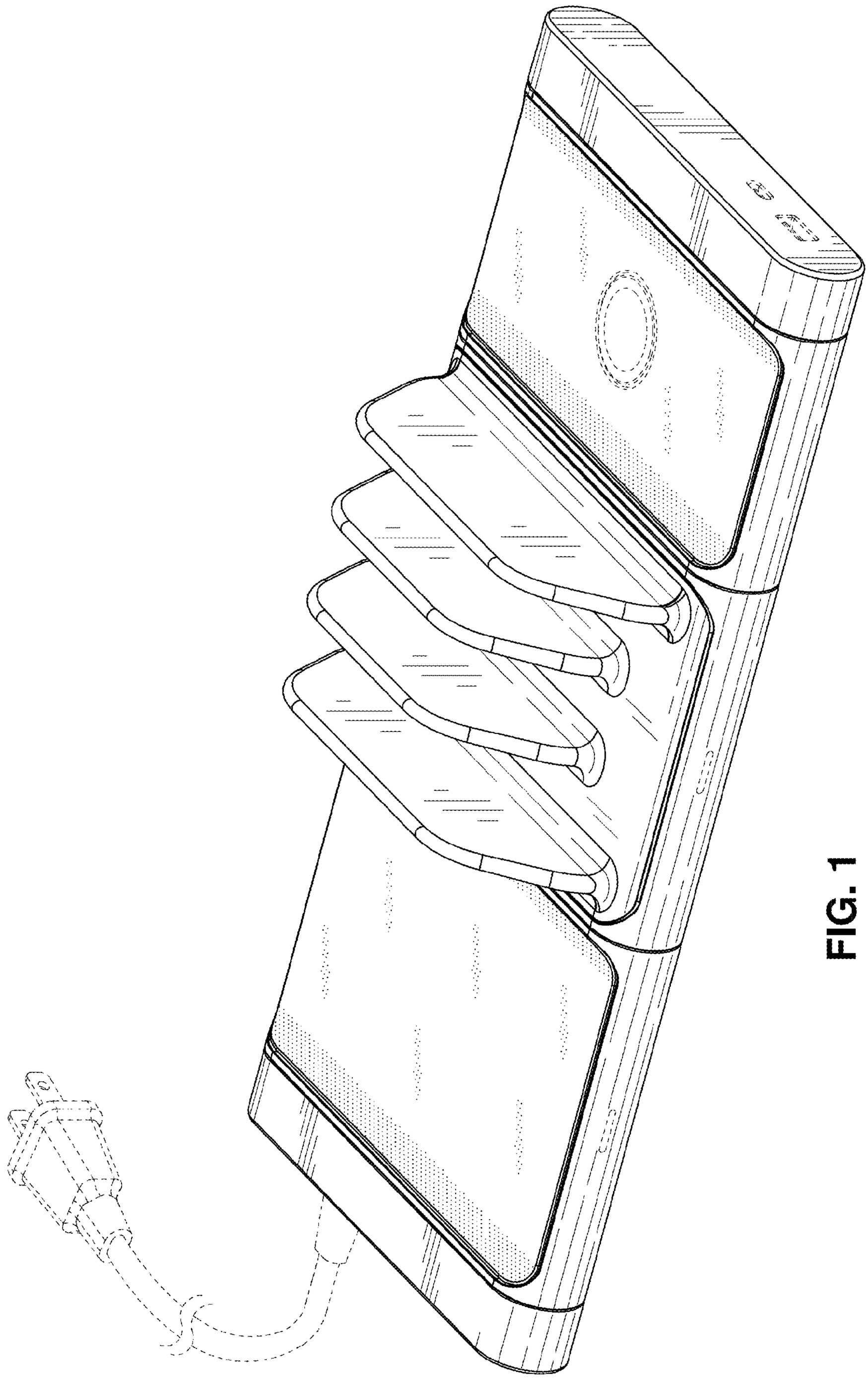

FIG. 1

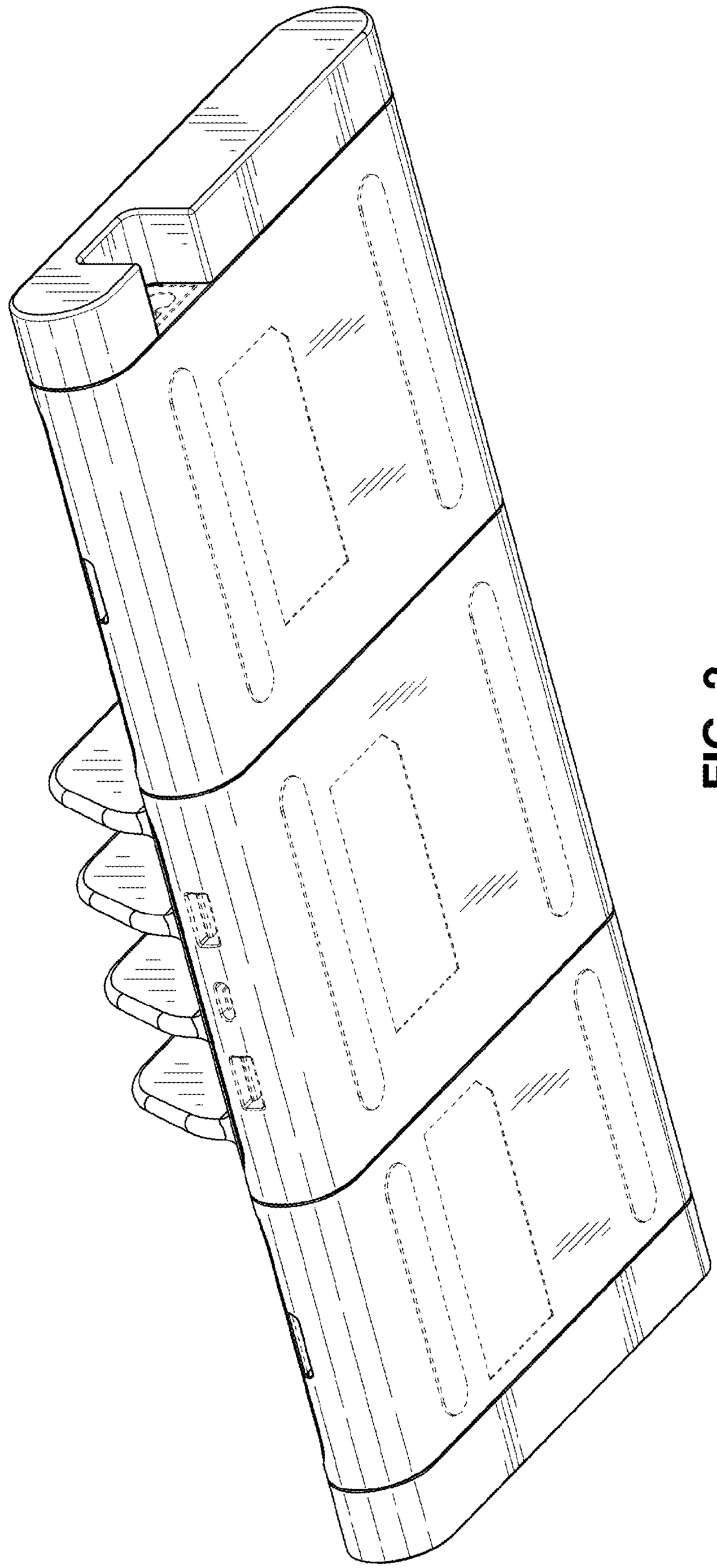

FIG. 2

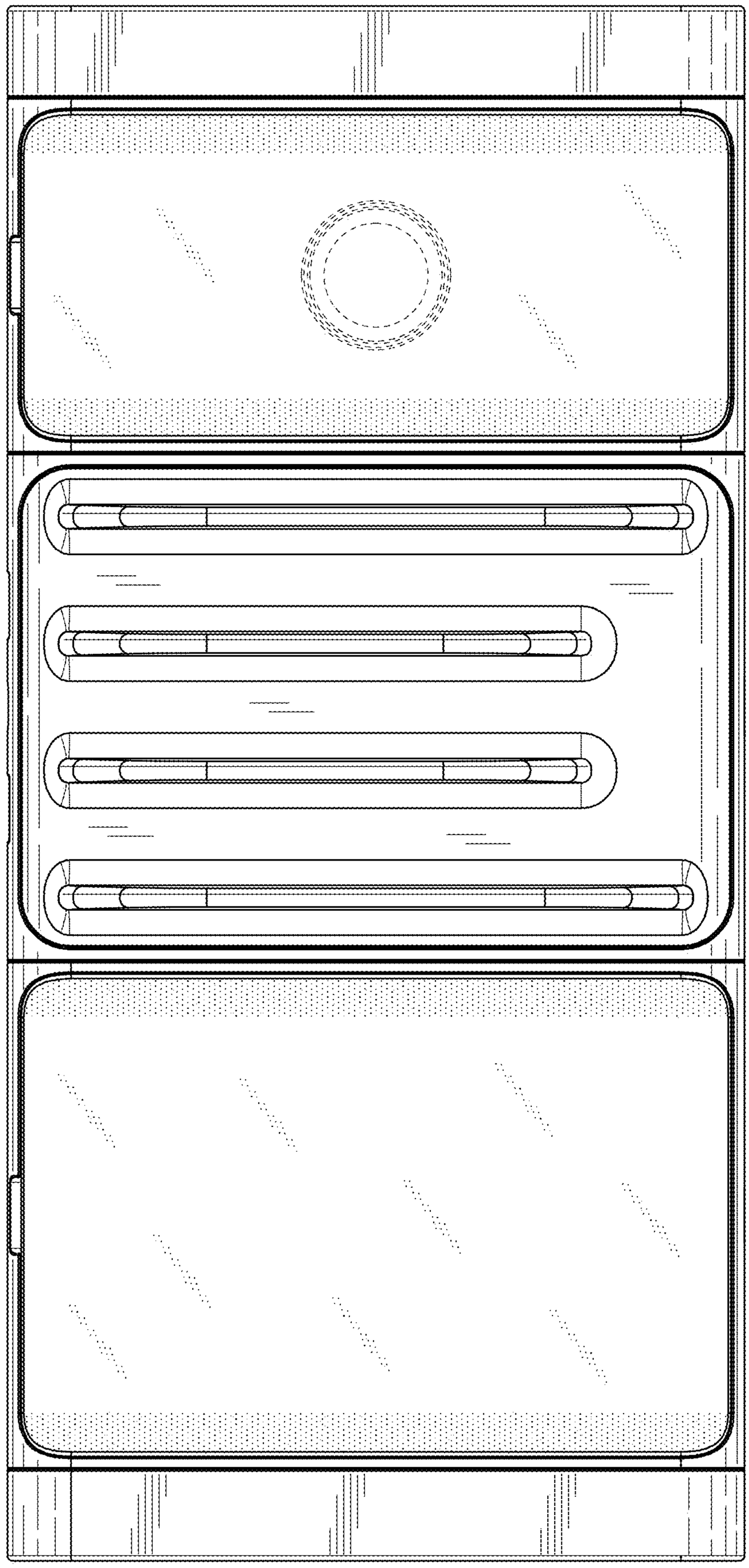

FIG. 3

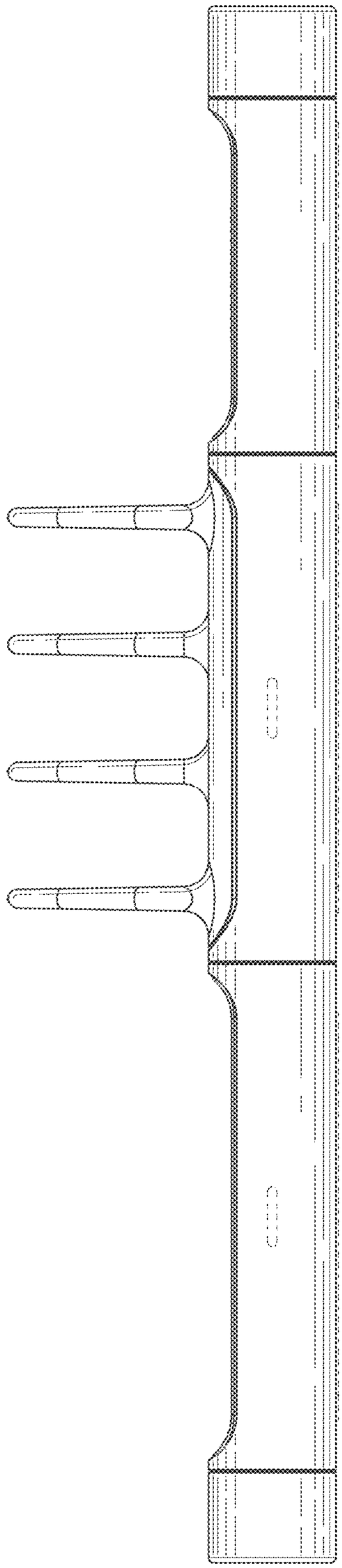

FIG. 4

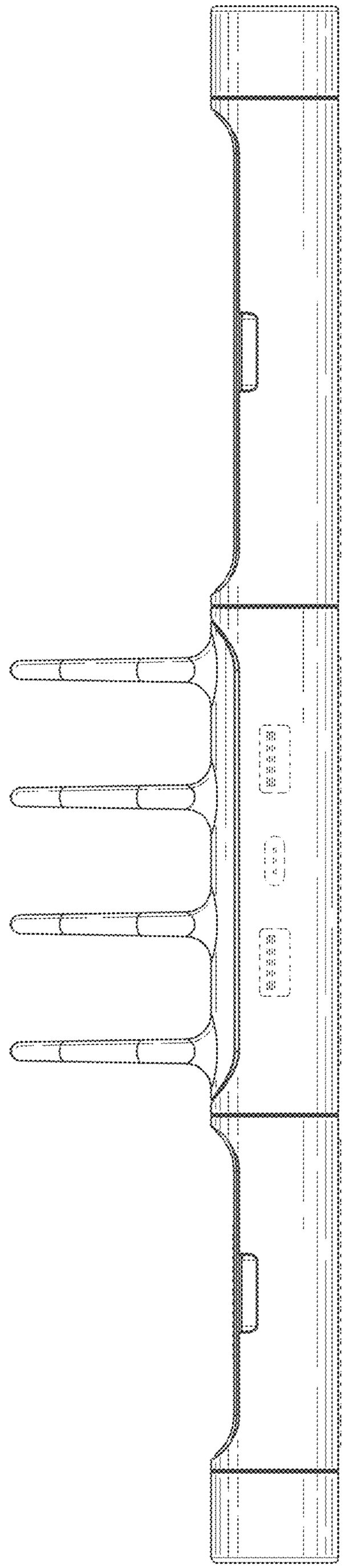

FIG. 5

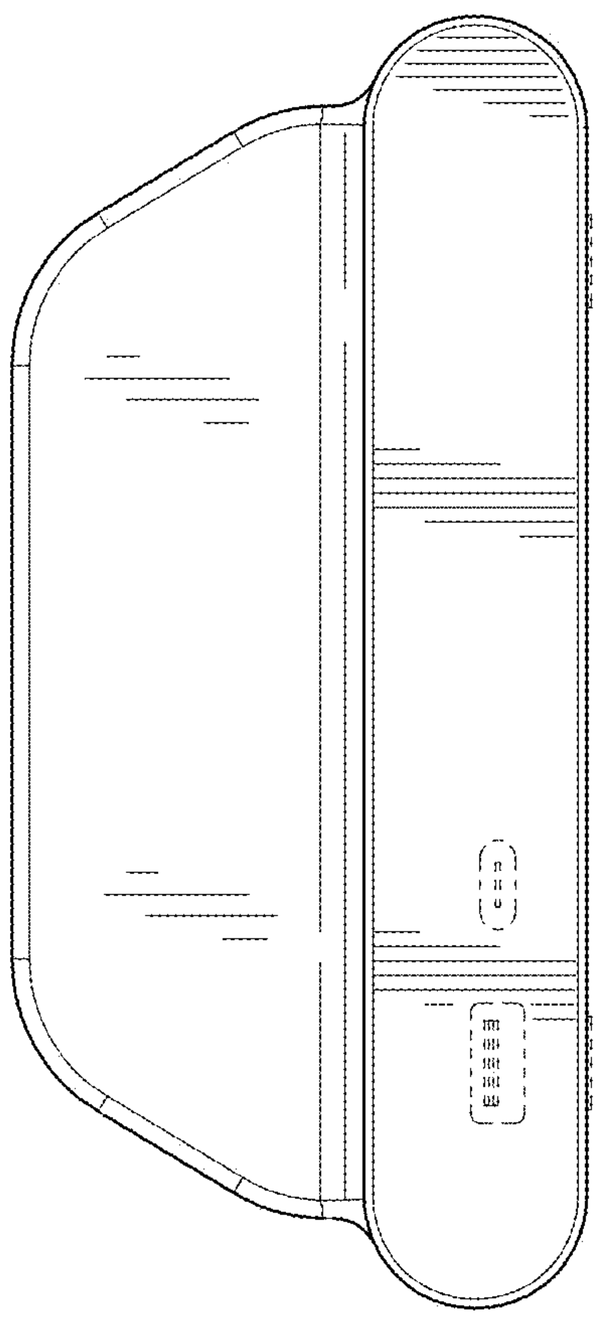

FIG. 6

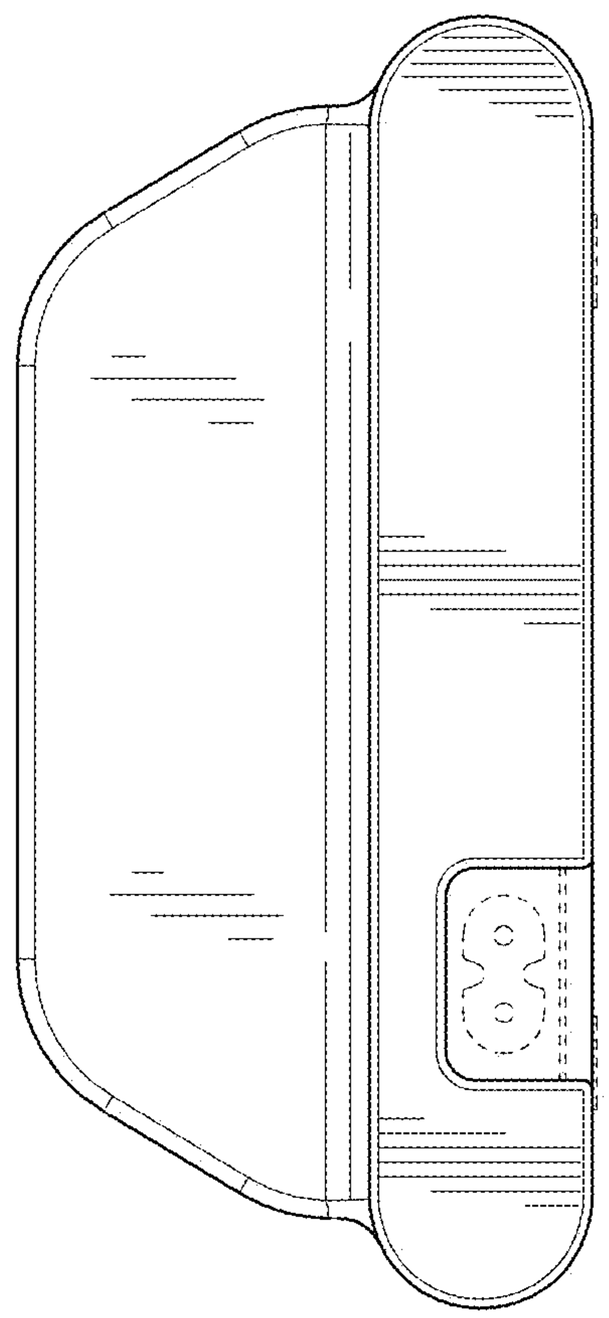

FIG. 7

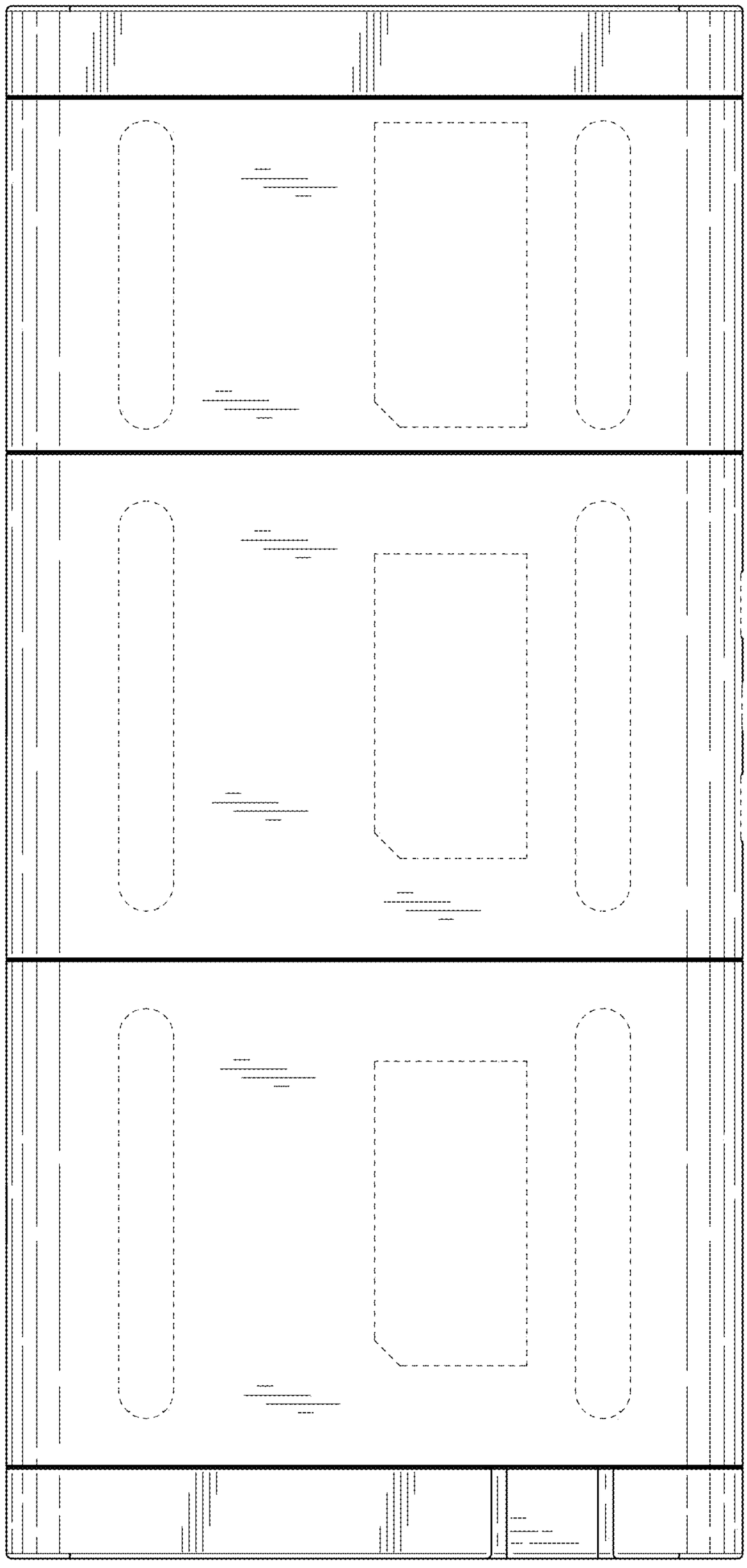

FIG. 8